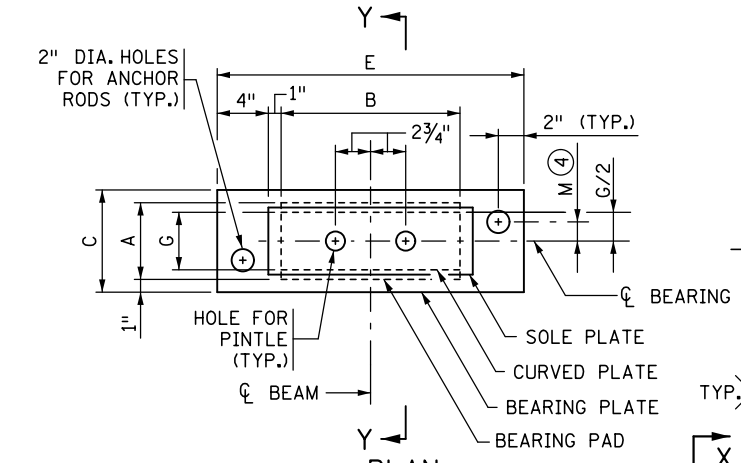

PLAN

BEAM NOT SHOWN

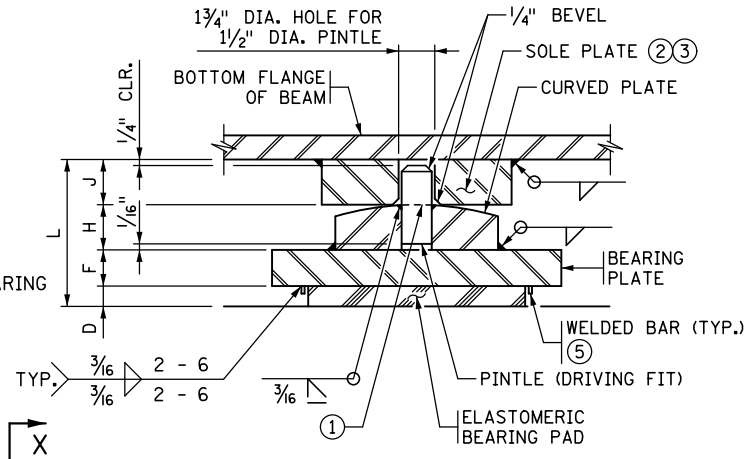

SECTION Y-Y

ENLARGED

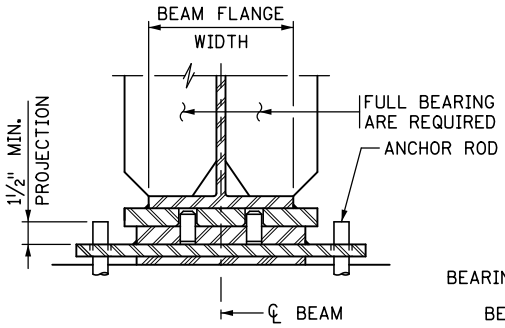

SECTION X-X

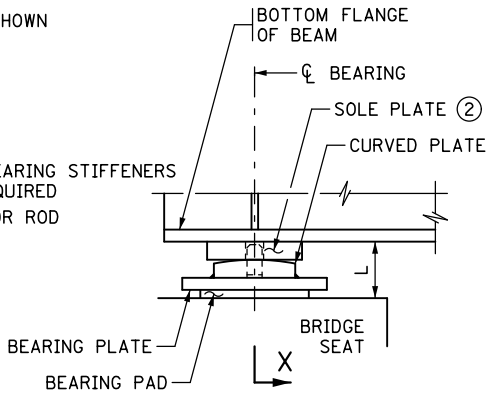

SIDE ELEVATION

ANCHOR RODS NOT SHOWN

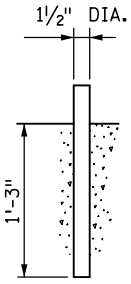

ANCHOR ROD DETAIL

TABLE

ASSEMBLY TYPE	LOCATION	BEAM FLANGE WIDTH	BEARING PAD SIZE			SHAPE FACTOR	BEARING PLATE SIZE			CURVED PLATE SIZE				SOLE PLATE SIZE			PINTLE DIA.	ASSY. HEIGHT	ANCHOR ROD OFFSET	
			A	B	D		C	E	F	G	B	H	R ①	WID.	LEN.	J ②		L	+/- ④	M

NOTES:

PROVIDE ELASTOMERIC MATERIALS AND PAD CONSTRUCTION PER SPEC. 3741.

PROVIDE STEEL PLATES PER SPEC. 3306 EXCEPT THE SOLE PLATE. PROVIDE SOLE PLATE WITH THE SAME MATERIAL SPECIFICATION AS THE STEEL BEAMS.

PROVIDE ANCHOR RODS PER SPEC. 3385, TYPE A. GALVANIZE PER SPEC. 3392.

FOR SPANS UP TO 150 FEET, USE 1½" DIAMETER ANCHOR RODS. ABOVE 150 FOOT SPANS, DESIGN ANCHOR RODS PER AASHTO DESIGN CRITERIA.

PROVIDE PINTLES PER SPEC. 3309.

GALVANIZE STRUCTURAL STEEL BEARING ASSEMBLY AFTER FABRICATION PER SPEC. 3394, EXCEPT AS NOTED.

PAYMENT FOR BEARING ASSEMBLY INCLUDES ALL MATERIAL ON THIS DETAIL EXCEPT THE SOLE PLATE. THE SOLE PLATE IS INCLUDED IN THE WEIGHT OF STRUCTURAL STEEL.

① 16" MIN. RADIUS UNLESS OTHERWISE SPECIFIED IN THE TABLE. THE MAX. RADIUS IS 24". FINISH TO 250 MICRO. THE FINISHED THICKNESS OF THE PLATE MAY BE 1/16" LESS THAN SHOWN.

② WHEN THE SOLE PLATE IS TAPERED, DIMENSIONS "J" AND "L" ARE THICKNESS OF SOLE PLATE AND BEARING ASSEMBLY AT CENTERLINE OF BEARING.

③ DO NOT GALVANIZE THIS PLATE.

④ "+" DENOTES OFFSET AS SHOWN.
"-" DENOTES OFFSET OPPOSITE OF SHOWN.

⑤ ⅜" X ⅜" BAR INSTALLED ON BEARING PLATE AROUND PERIMETER OF BEARING PAD. BAR LENGTH IS 2" LESS THAN ADJACENT PAD DIMENSION, CENTERED ON PAD. CENTERLINE OF BAR TO EDGE OF PAD DIMENSION = ½".

DESIGNER NOTE (REMOVE DESIGNER NOTE PRIOR TO PLOTTING FINAL PLAN):

TWO 1½" DIAMETER ANCHOR RODS HAVE A FACTORED HORIZONTAL RESISTANCE OF 95 KIPS. DESIGNER SHALL INCREASE DIAMETER, NUMBER OF RODS OR BOTH WHEN NEEDED.

WHEN SPECIFYING OFFSET DIMENSION "M", CONSIDER THE SIZE AND PROXIMITY OF THE DIAPHRAGM AND LONGITUDINAL PIER REINFORCEMENT TO ALLOW ADEQUATE ROOM FOR INSTALLATION OF ANCHOR RODS.

DESIGN DATA:

MAXIMUM HORIZONTAL LOAD IS 70 KIPS. MINIMUM SOLE PLATE THICKNESS IS 1¼".

APPROVED: NOVEMBER 22, 2002

STATE BRIDGE ENGINEER

STATE OF MINNESOTA
DEPARTMENT OF TRANSPORTATION

CURVED PLATE BEARING ASSEMBLY
(STEEL BEAMS)
(FIXED)

REVISED
08-10-2006
12-17-2008
11-06-2013
11-03-2015

DETAIL NO.

B354