MANUAL

5-397

MINNESOTA DEPARTMENT OF TRANSPORTATION

Bridge Office

Bridge Details Manual Part II

MnDOT BRIDGE OFFICE

Bridge Details Manual Part II

Standard Figures

Minnesota Department of Transportation
3485 Hadley Avenue North • Mail Stop 610
Oakdale, MN 55128-3307
Phone: 651/366-4500 Fax: 651/366-4497

Last Date Revised: January 05, 2017

Figure 5-397.114
Concrete Barrier (Type F, TL-4) With Separate End Post (Without Concrete Wearing Course)

Approved, and signed, November 06, 2013. Last date revised: November 3rd, 2015

Revised 11-03-2015
At Section C-C:
- Changed the deck overhang at the backside of the barrier from 1" to 2".

Re-Approved 11-06-2013
At SECTION C-C:
- Added a 2" x 1'-0" high aesthetic coping to the back face of the barrier and removed the barrier rustication reveals. Added or changed barrier dimensions accordingly. Added ½" Chamfer (Typ.) to the outside top corner of the barrier.
- Changed the reinforcement to 3" CLR. at the outside face of the barrier. Changed the deck coping dimension from 2" to 1"
- Removed the "MIN" from the 10" PROJ. MIN. dimension for the R501E bar.

At INSIDE ELEVATION OF BARRIER:
- Replaced the "Deflection Joint" with a "Control Joint" showing longitudinal reinforcement continuing through the joint and new vertical reinforcement spacing. Added Control Joint spacing and detail notes, along with Section arrows D-D.
- Added the new minimum lap for the longitudinal reinforcement, dashed horizontal line representing the 2" x 1'-0" barrier aesthetic coping.
- Changed the approach curb look. Changed the note: "Top of Structural Slab" to "Top of Slab". Changed longitudinal bar designations.

At SECTION A-A:
- Widened the barrier (full depth) matching the coping on the superstructure. Changed the barrier dimensions accordingly.
- Changed the look of the abutment tie bar to engage all three R407E bars. Changed the look of the R708E bar to represent the actual shape of the bar. Increased the length of the Guardrail Connection pipes to accommodate the widened barrier.

At Section B-B:
- Increased the dimensions for all lengths of pipe by 2" to accommodate the widened barrier.
- Added the ½" dimension from the ends of the pipes to the edge of the concrete.
- Added sub-title note "Trim Guardrail Bolts Such That No More Than 1 ½" Protrudes From Back Face of Barrier".

At the GUARDRAIL CONNECTION DETAIL:
- Removed the "Mn/DOT" from the "Per Mn/DOT Spec." reference.
- Changed the estimated weight of the plate from 22 to 23 pounds.

At the PLAN VIEW OF END POSTS:
- Changed the look to represent the widening of the end posts and the added aesthetic coping on the deck.
- Added sub-title "Expansion Joint (Device Not Shown)"

Removed the "Barrier Rustication" detail from the standard.

Replaced the "Deflection Joint Details" with "Control Joint Details" on the standard.

Adjusted R502E and R503E bar dimensions and lengths at the "Bar Bend Details" and the "Bill of Reinforcement For Barrier" locations due to the 3" clear at the outside of the barrier. Removed the barrier longitudinal bar designations in the table.

Added to the Designer Note "For bridges with superelevation exceeding 2%, show dimensions for both the front and back face of the barrier.

At GENERAL NOTES:

- Changed 1st note to read: "Payment length shall be measured between the outside faces of the barrier".
- Changed the 2nd note to read: Concrete Barrier = 464 LBS./FT. (0.115 CU. YDS./FT.)
- In the 3rd note, changed ½" Vee to ½" Chamfer.
- Changed the 4th note to read: "Maximum spacing of control joints shall be 10 ft. See superstructure sheet for joint spacing."
- In the 5th note, removed the "Mn/DOT" preceding the spec. number.
- Changed the 6th note to read: Guardrail connection and name plate to be considered incidental to barrier.
- Added "③ Joint sealant per Mn/DOT approved/qualified products list –Crack and joint materials – Silicone joint sealers.

Revised 04-17-2013
This standard was updated to convert reinforcing bar marks from metric to U.S. customary bar designations.

Revised 05-26-2006
Changed title *from* Concrete Railing (Type F) With Separate End Post (Without Concrete Wearing Course) *to* Concrete Barrier (Type F, TL-4) With Separate End Post (Without Concrete Wearing Course)

Changed all instances of RAIL and RAILING *to* BARRIER.

At INSIDE ELEVATION OF BARRIER:

- Moved name plate an additional 3" from expansion joint (*from* 1'-6" *to* 1'-9")
- Added additional dowel and vertical bars to bridge side of expansion joint

AT R1601E bar bend:

- Changed 1'-7" dimension *to* 1'-6"
- Changed 2:1 slope *to* 3:1

At BILL OF REINFORCMENT table: changed R1601E dimension of 5'-8" *to* 5'-7"

Under GENERAL NOTES:

- Changed LENGTH OF "TYPE F RAILING CONCRETE …" *to* LENGTH OF "TYPE F (TL-4) RAILING CONCRETE …
- Changed GUARDRAIL CONNECTION TO BE INCLUDED IN PRICE BID FOR OTHER ITEMS. *to* GUARDRAIL CONNECTION, CORK, AND NAME PLATE TO BE CONSIDERED INCIDENTAL TO "TYPE F (TL-4) RAILING CONCRETE (3Y46 OR 3Y46A)".
- Changed RAIL QUANTITIES ARE INCLUDED IN SUMMARY … *to* BARRIER QUANTITIES ARE LISTED IN SUMMARY …

Approved, and signed, December 18, 2003, by D. Dorgan

Figure 5-397.115(A)
Concrete Barrier (Type F, TL-4) Integral or Semi-Integral Abutment With Integral End Post (Without Concrete Wearing Course)

Approved, and signed, January 13, 2015

Re-Approved 01-13-2015
Changed the Standard Figure number *from* Fig. 5-397.115 *to* Fig. 5-397.115(A).

Changed the Standard Figure sub-title name *from* With Integral End Post (Without Concrete Wearing Course) *to* Integral or Semi-Integral Abutment with Integral End Post (Without Concrete Wearing Course).

Removed Detail "A" and Detail "B" and all accompanying references to them from the Standard Figure.
Removed reinforcement (* R504E bar) from the Bill of Reinforcement and the bar bend details due to the removal of Detail "A".
Changed the reinforcement numbering sequence throughout the standard to accommodate the reinforcement change.

At Section A-A:
- Removed the dashed reinforcement and accompanying note within the wingwall.

At the Inside Elevation of Barrier and at Section E-E:
- Changed the saw cut gap *from* ⅛" *to* ¼" at the joint.

At Section C-C:
- Changed the deck coping/overhang *from* 1" *to* 2".

Changed the Designer Note to read: For bridges with superelevation exceeding 2%, show the barrier front face dimensions as indicated on this sheet, and also calculate and show the barrier back face dimensions. Also verify that bar R501E has 10" min. projection when cross slope varies from normal 0.02 ft/ft

At GENERAL NOTES:
- Changed 1st note to read: "Measure payment length between the outside faces of the barrier".
- Changed the 4th note to read: "Space control joints at 10 ft. maximum. See superstructure sheet for joint spacing."

Re-Approved 11-06-2013
At SECTION C-C:
- Added a 2" x 1'-0" high aesthetic coping to the back face of the barrier and removed the barrier rustication reveals. Added or changed barrier dimensions accordingly. Added ½" Chamfer (Typ.) to the outside top corner of the barrier.
- Changed the reinforcement to 3" CLR. at the outside face of the barrier. Changed the deck coping dimension from 2" to 1"
- Removed the "MIN" from the 10" PROJ. MIN. dimension for the R501E bar.

At INSIDE ELEVATION OF BARRIER:
- Added sub-title at INSIDE ELEVATION OF BARRIER: See Detail "A" For Parapet Abutment.
- Changed the joint title *from* "EXPANSION JOINT" *to* "JOINT AT ABUTMENT" and also changed the accompanying sub-title *from* (Expansion Device not Shown) *to* (Integral or Semi-Integral Abutment).
- Changed the look of the Joint at Abutment with Saw Cut information and dimensions, barrier dowel and vertical bar spacing, section arrows E-E and joint notes.
- Changed the dimension of the barrier off the bridge *from* "Abutment Wingwall *to* Bridge Approach - Barrier Length 7'-0" Minimum.
- Replaced the "Deflection Joint" with a "Control Joint" showing longitudinal reinforcement continuing through the joint and new vertical reinforcement spacing. Added Control Joint spacing and detail notes, along with Section arrows D-D.

- Added the new minimum lap for the longitudinal reinforcement. Added dashed horizontal line representing the 2" x 1'-0" barrier aesthetic coping along with the 3'-0" dimension ending the aesthetic coping.
- Changed the approach curb look. Changed the note: "Top of Structural Slab" to "Top of Slab". Changed longitudinal and vertical bar designations.

At SECTION A-A:

- Changed the look of the Section to show the barrier on the approach panel and the wingwall outside of the approach panel with 1½" polystyrene separating them with a reference to Detail "B".
- Widened the barrier (full depth), matching the coping on the superstructure. Changed barrier dimensions accordingly. Increased the length of the Guardrail Connection pipes to accommodate the widened barrier.
- Added R502E bar with dimension to the edge of the approach.
- Added note referencing the reinforcement needed if the barrier is located on the wingwall.

At Section B-B:

- Increased the dimensions for all lengths of pipe by 2" to accommodate the widened barrier.
- Added the ½" dimension from the ends of the pipes to the edge of the concrete.
- Added sub-title note "Trim Guardrail Bolts Such That No More Than 1 ½" Protrudes From Back Face of Barrier".

At the GUARDRAIL CONNECTION DETAIL:

- Removed the "Mn/DOT" from the "Per Mn/DOT Spec." reference.
- Changed the estimated weight of the plate from 22 to 23 pounds.

Replaced the "Deflection Joint Details" with "Control Joint Details on the standard.

Removed the "Barrier Rustication" detail from the standard.

Added "Detail "A" detailing the barrier reinforcement for a parapet abutment and barrier on wingwall. Also added "Detail "B" showing the widened barrier, polystyrene and wingwall relationship for the 3'-0" end of barrier along the approach panel.

Adjusted reinforcement bar dimensions and lengths at the "Bar Bend Details" and the "Bill of Reinforcement For Barrier" locations due to the 3" clear at the outside of the barrier. Added barrier dowel R502E bar and adjusted bar designations throughout the standard.

Added to the Designer Note "For bridges with superelevation exceeding 2%, show dimensions for both the front and back face of the barrier.

At GENERAL NOTES:

- Changed 1st note to read: "Payment length shall be measured between the outside faces of the barrier".
- Changed the 2nd note to read: Concrete Barrier = 464 LBS./FT. (0.115 CU. YDS./FT.)
- In the 3rd note, changed ½" Vee to ½" Chamfer.
- Changed the 4th note to read: "Maximum spacing of control joints shall be 10 ft. See superstructure sheet for joint spacing."
- In the 5th note, removed the "Mn/DOT" preceding the spec. number.
- Changed the 6th note to read: Guardrail connection and name plate to be considered incidental to barrier.
- Added "② Joint sealant per Mn/DOT approved/qualified products list –Crack and joint materials – Silicone joint sealers.

Revised 04-17-2013
This standard was updated to convert reinforcing bar marks from metric to U.S. customary bar designations.

Revised 05-26-2006
Changed title *from* Concrete Railing (Type F) With Integral End Post (Without Concrete Wearing Course) *to* Concrete Barrier (Type F, TL-4) With Integral End Post (Without Concrete Wearing Course)

Changed all instances of RAIL and RAILING *to* BARRIER.

At INSIDE ELEVATION OF BARRIER:
- Moved name plate an additional 3" from expansion joint (*from* 1'-6" *to* 1'-9")
- Added additional dowel and vertical bars to each side of expansion joint

AT R1601E bar bend:
- Changed 1'-7" dimension *to* 1'-6"
- Changed 2:1 slope *to* 3:1

At BILL OF REINFORCMENT table: changed R1601E dimension of 5'-8" *to* 5'-7"

Under GENERAL NOTES:
- Changed LENGTH OF "TYPE F RAILING CONCRETE …" *to* LENGTH OF "TYPE F (TL-4) RAILING CONCRETE …
- Changed GUARDRAIL CONNECTION TO BE INCLUDED IN PRICE BID FOR OTHER ITEMS. *to* GUARDRAIL CONNECTION, CORK, AND NAME PLATE TO BE CONSIDERED INCIDENTAL TO "TYPE F (TL-4) RAILING CONCRETE (3Y46 OR 3Y46A)".
- Changed RAIL QUANTITIES ARE INCLUDED IN SUMMARY … *to* BARRIER QUANTITIES ARE LISTED IN SUMMARY …

Approved, and signed, December 18, 2003, by D. Dorgan

Figure 5-397.115(B)
Concrete Barrier (Type F, TL-4) Parapet Abutment with Integral End Post (Without Concrete Wearing Course)

Approved, and signed, January 13, 2015

Approved, and signed, January 13, 2015
NEW STANDARD

Figure 5-397.115(C)
Concrete Barrier (Type F, TL-4) Integral or Semi-Integral Abutment with Integral End Post (Without Concrete Wearing Course) No Approach Panel

Approved, and signed, January 13, 2015

Approved, and signed, January 13, 2015
NEW STANDARD

Figure 5-397.116
Concrete Barrier (Type F, TL-4) With Separate End Post
(With Concrete Wearing Course)

Approved, and signed, November 06, 2013. Last date revised: November 3rd, 2015

Revised 11-03-2015

At Section C-C:

- Changed the deck overhang at the backside of the barrier from 1" to 2".

Re-Approved 11-06-2013

At SECTION C-C:

- Added a 2" x 1'-0" high aesthetic coping to the back face of the barrier and removed the barrier rustication reveals. Added or changed barrier dimensions accordingly. Added ½" Chamfer (Typ.) to the outside top corner of the barrier.
- Changed the reinforcement to 3" CLR. at the outside face of the barrier. Changed the deck coping dimension from 2" to 1"
- Removed the "MIN" from the 10" PROJ. MIN. dimension for the R501E bar.

At INSIDE ELEVATION OF BARRIER:

- Replaced the "Deflection Joint" with a "Control Joint" showing longitudinal reinforcement continuing through the joint and new vertical reinforcement spacing. Added Control Joint spacing and detail notes, along with Section arrows D-D.
- Added the new minimum lap for the longitudinal reinforcement, dashed horizontal line representing the 2" x 1'-0" barrier aesthetic coping.
- Changed the approach curb look. Changed the note: "Top of Structural Slab" to "Top of Slab". Changed longitudinal bar designations.

At SECTION A-A:

- Widened the barrier (full depth) matching the coping on the superstructure. Changed the barrier dimensions accordingly.
- Changed the look of the R708E bar to represent the actual shape of the bar. Increased the length of the Guardrail Connection pipes to accommodate the widened barrier.

At Section B-B:

- Increased the dimensions for all lengths of pipe by 2" to accommodate the widened barrier.
- Added the ½" dimension from the ends of the pipes to the edge of the concrete.
- Added sub-title note "Trim Guardrail Bolts Such That No More Than 1 ½" Protrudes From Back Face of Barrier".

At the GUARDRAIL CONNECTION DETAIL:

- Removed the "Mn/DOT" from the "Per Mn/DOT Spec." reference.
- Changed the estimated weight of the plate from 22 to 23 pounds.

At the PLAN VIEW OF END POSTS:

- Changed the look to represent the widening of the end posts and the added aesthetic coping on the deck.
- Added sub-title "Expansion Joint (Device Not Shown)"

Removed the "Barrier Rustication" detail from the standard.

Replaced the "Deflection Joint Details" with "Control Joint Details" on the standard.

Adjusted R502E and R503E bar dimensions and lengths at the "Bar Bend Details" and the "Bill of Reinforcement For Barrier" locations due to the 3" clear at the outside of the barrier. Removed the barrier longitudinal bar designations in the table.

Added to the Designer Note "For bridges with superelevation exceeding 2%, show dimensions for both the front and back face of the barrier.

At GENERAL NOTES:

- Changed 1st note to read: "Payment length shall be measured between the outside faces of the barrier".
- Changed the 2nd note to read: Concrete Barrier = 502 LBS./FT. (0.124 CU. YDS./FT.)
- In the 3rd note, changed ½" Vee to ½" Chamfer.
- Changed the 4th note to read: "Maximum spacing of control joints shall be 10 ft. See superstructure sheet for joint spacing."
- In the 5th note, removed the "Mn/DOT" preceding the spec. number.
- Changed the 6th note to read: Guardrail connection and name plate to be considered incidental to barrier.
- Added "③ Joint sealant per Mn/DOT approved/qualified products list –Crack and joint materials – Silicone joint sealers.

Revised 04-17-2013
This standard was updated to convert reinforcing bar marks from metric to U.S. customary bar designations.

Revised 05-26-2006
Changed title *from* Concrete Railing (Type F) With Separate End Post (With Concrete Wearing Course) *to* Concrete Barrier (Type F, TL-4) With Separate End Post (With Concrete Wearing Course)

Changed all instances of RAIL and RAILING *to* BARRIER.

At INSIDE ELEVATION OF BARRIER:

- Moved name plate an additional 3" from expansion joint (*from* 1'-6" *to* 1'-9")
- Added additional dowel and vertical bars to bridge side of expansion joint

Under GENERAL NOTES:

- Changed LENGTH OF "TYPE F RAILING CONCRETE …" *to* LENGTH OF "TYPE F (TL-4) RAILING CONCRETE …
- Changed GUARDRAIL CONNECTION TO BE INCLUDED IN PRICE BID FOR OTHER ITEMS. *to* GUARDRAIL CONNECTION, CORK, AND NAME PLATE TO BE CONSIDERED INCIDENTAL TO "TYPE F (TL-4) RAILING CONCRETE (3Y46 OR 3Y46A)".
- Changed RAIL QUANTITIES ARE INCLUDED IN SUMMARY … *to* BARRIER QUANTITIES ARE LISTED IN SUMMARY …

Approved, and signed, December 18, 2003, by D. Dorgan

Figure 5-397.117(A)
Concrete Barrier (Type F, TL-4) Integral or Semi-Integral Abutment with Integral End Post (With Concrete Wearing Course)

Approved, and signed, January 13, 2015. Last date revised: November 3rd, 2015

Revised 11-03-2015
At the Bar Bend Details:
- Changed the bar numbering for the barrier ties at the bar bend title from "R503E, R505E & R506E" to "R503E, R504E & R505E".

Re-Approved 01-13-2015
Changed the Standard Figure number *from* Fig. 5-397.117 *to* Fig. 5-397.117(A).

Changed the Standard Figure sub-title name *from* With Integral End Post (With Concrete Wearing Course) *to* Integral or Semi-Integral Abutment with Integral End Post (With Concrete Wearing Course).

Removed Detail "A" and Detail "B" and all accompanying references to them from the Standard Figure.
Removed reinforcement (* R504E bar) from the Bill of Reinforcement and the bar bend details due to the removal of Detail "A".
Changed the reinforcement numbering sequence throughout the standard to accommodate the reinforcement change.

At Section A-A:
- Removed the dashed reinforcement and accompanying note within the wingwall.

At the Inside Elevation of Barrier and at Section E-E:
- Changed the saw cut gap *from* ⅛" *to* ¼" at the joint.

At Section C-C:
- Changed the deck coping/overhang *from* 1" *to* 2".

Changed the Designer Note to read: For bridges with superelevation exceeding 2%, show the barrier front face dimensions as indicated on this sheet, and also calculate and show the barrier back face dimensions. Also verify that bar R501E has 10" min. projection when cross slope varies from normal 0.02 ft/ft

At GENERAL NOTES:
- Changed 1st note to read: "Measure payment length between the outside faces of the barrier".
- Changed the 4th note to read: "Space control joints at 10 ft. maximum. See superstructure sheet for joint spacing."

Re-Approved 11-06-2013
At SECTION C-C:
- Added a 2" x 1'-0" high aesthetic coping to the back face of the barrier and removed the barrier rustication reveals. Added or changed barrier dimensions accordingly. Added ½" Chamfer (Typ.) to the outside top corner of the barrier.
- Changed the reinforcement to 3" CLR. at the outside face of the barrier. Changed the deck coping dimension from 2" to 1"
- Removed the "MIN" from the 10" PROJ. MIN. dimension for the R501E bar.

At INSIDE ELEVATION OF BARRIER:
- Added sub-title at INSIDE ELEVATION OF BARRIER: See Detail "A" For Parapet Abutment.
- Changed the joint title *from* "EXPANSION JOINT" *to* "JOINT AT ABUTMENT" and also changed the accompanying sub-title *from* (Expansion Device not Shown) *to* (Integral or Semi-Integral Abutment).
- Changed the look of the Joint at Abutment with Saw Cut information and dimensions, barrier dowel and vertical bar spacing, section arrows E-E and joint notes.
- Changed the dimension of the barrier off the bridge *from* "Abutment Wingwall *to* Bridge Approach - Barrier Length 7'-0" Minimum.

- Replaced the "Deflection Joint" with a "Control Joint" showing longitudinal reinforcement continuing through the joint and new vertical reinforcement spacing. Added Control Joint spacing and detail notes, along with Section arrows D-D.
- Added the new minimum lap for the longitudinal reinforcement. Added dashed horizontal line representing the 2" x 1'-0" barrier aesthetic coping along with the 3'-0" dimension ending the aesthetic coping.
- Changed the approach curb look. Changed the note: "Top of Structural Slab" to "Top of Slab". Changed longitudinal and vertical bar designations.

At SECTION A-A:

- Changed the look of the Section to show the barrier on the approach panel and the wingwall outside of the approach panel with 1½" polystyrene separating them with a reference to Detail "B".
- Widened the barrier (full depth), matching the coping on the superstructure. Changed barrier dimensions accordingly. Increased the length of the Guardrail Connection pipes to accommodate the widened barrier.
- Added R502E bar with dimension to the edge of the approach.
- Added note referencing the reinforcement needed if the barrier is located on the wingwall.

At Section B-B:

- Increased the dimensions for all lengths of pipe by 2" to accommodate the widened barrier.
- Added the ½" dimension from the ends of the pipes to the edge of the concrete.
- Added sub-title note "Trim Guardrail Bolts Such That No More Than 1 ½" Protrudes From Back Face of Barrier".

At the GUARDRAIL CONNECTION DETAIL:

- Removed the "Mn/DOT" from the "Per Mn/DOT Spec." reference.
- Changed the estimated weight of the plate from 22 to 23 pounds.

Replaced the "Deflection Joint Details" with "Control Joint Details on the standard.

Removed the "Barrier Rustication" detail from the standard.

Added "Detail "A" detailing the barrier reinforcement for a parapet abutment and barrier on wingwall. Also added "Detail "B" showing the widened barrier, polystyrene and wingwall relationship for the 3'-0" end of barrier along the approach panel.

Adjusted reinforcement bar dimensions and lengths at the "Bar Bend Details" and the "Bill of Reinforcement For Barrier" locations due to the 3" clear at the outside of the barrier. Added barrier dowel R502E bar and adjusted bar designations throughout the standard.

Added to the Designer Note "For bridges with superelevation exceeding 2%, show dimensions for both the front <u>and</u> back face of the barrier.

At GENERAL NOTES:

- Changed 1st note to read: "Payment length shall be measured between the outside faces of the barrier".
- Changed the 2nd note to read: Concrete Barrier = 502 LBS./FT. (0.124 CU. YDS./FT.)
- In the 3rd note, changed ½" Vee to ½" Chamfer.
- Changed the 4th note to read: "Maximum spacing of control joints shall be 10 ft. See superstructure sheet for joint spacing."
- In the 5th note, removed the "Mn/DOT" preceding the spec. number.
- Changed the 6th note to read: Guardrail connection and name plate to be considered incidental to barrier.
- Added "② Joint sealant per Mn/DOT approved/qualified products list –Crack and joint materials – Silicone joint sealers.

<u>Revised 04-17-2013</u>
This standard was updated to convert reinforcing bar marks from metric to U.S. customary bar designations.

<u>Revised 05-26-2006</u>

Changed title *from* Concrete Railing (Type F) With Integral End Post (With Concrete Wearing Course) *to* Concrete Barrier (Type F, TL-4) With Integral End Post (With Concrete Wearing Course)

Changed all instances of RAIL and RAILING *to* BARRIER.

At INSIDE ELEVATION OF BARRIER:

- Moved name plate an additional 3" from expansion joint (*from* 1'-6" *to* 1'-9")
- Added additional dowel and vertical bars to each side of expansion joint

Under GENERAL NOTES:

- Changed LENGTH OF "TYPE F RAILING CONCRETE …" *to* LENGTH OF "TYPE F (TL-4) RAILING CONCRETE …
- Changed GUARDRAIL CONNECTION TO BE INCLUDED IN PRICE BID FOR OTHER ITEMS. *to* GUARDRAIL CONNECTION, CORK, AND NAME PLATE TO BE CONSIDERED INCIDENTAL TO "TYPE F (TL-4) RAILING CONCRETE (3Y46 OR 3Y46A)".
- Changed RAIL QUANTITIES ARE INCLUDED IN SUMMARY … *to* BARRIER QUANTITIES ARE LISTED IN SUMMARY …

Approved, and signed, December 18, 2003, by D. Dorgan

Figure 5-397.117(B)
Concrete Barrier (Type F, TL-4) Parapet Abutment with Integral End Post (With Concrete Wearing Course)

Approved, and signed, January 13, 2015

Approved, and signed, January 13, 2015
NEW STANDARD

Figure 5-397.119
Wire Fence (Design W-1) and Concrete Parapet (Type P-1) (with Integral End Post)

Approved, and signed, January 5, 2017.

Approved 01-05-2017

REMOVED From the STANDARD FIGURE:

- Removed all reinforcement and all reinforcement related details, dimensions and information. This information is located on the P-1 parapet standard.
- Removed the Rail Rustication detail, Deflection Joint detail, Rail Test Level information and name plate.
- Removed and replaced the old P-1 barrier shape and any related dimensions with the updated P-1 shape showing the aesthetic coping, brush curb, control joint and end of bridge joints throughout the standard.
- Removed "1 ¾" Chamfer Both Sides" from the barrier at the Typical Section through Fence.

At GENERAL NOTES:

- Removed and replaced all General Notes and added numbered notes ② and ③.
- At numbered note ①, added the words "EXP. JOINT" to the 2nd sentence for clarification.

At SHEET TITLE:

- Removed the sub title "(With Integral End Post)".

At the INSIDE ELEVATION OF RAILING:

- Added "12" Min. (Typ.)" to show distance from the end of bridge joint and control joint to posts.
- Added "Top of Concrete Parapet" with leader line.
- Added "Control Joint ②" pointing to the control joint.
- Added "Junction "Y" at Intermediate Posts (Typ.)" with circled leader line showing the location.
- Added "See Concrete Parapet Plan Sheet for Joint Details", "Bridge Approach or Wingwall" and "Bridge Superstructure" to the end of bridge joint location.
- Changed note pointing to the lower rail to: "1¼" Nom. Dia. Standard Pipe (Typ.) Tie at 1'-0" Max. Spg."
- Changed the Tension Wire note to: "Galvanized 7 ga. Coil Spring Steel Tension Wire per AASHTO M181 (Ties @ 1'-0" Max. Spg.)"

At the TYPICAL SECTION THROUGH FENCE:

- Removed the 1'-0" dimension at the top of the chain link to pipe brace location.
- Added the base plate to the detail.
- Adjusted the 3"+/- dimension to be shown from the base plate to the bottom rail.
- Changed the size of the pipe to 2 ½" and the weight per foot to 5.79 at the note for Intermediate Posts.
- Changed the words "Knuckle Salvage" to "Knuckled Selvage" in the 6'-0" Wide Chain Link note.
- Added note: "See Concrete Parapet Plan Sheet for Details" with leader line to new parapet shape.
- Added "③ Top of Bridge Deck or Sidewalk" with leader line.
- Changed the dimension from 6" to 6 ½" between the inside face of the parapet to the ℄ of post.

ADDED Bubbled DESIGNER NOTE:

- Select Finish Coating Type (Galv. Or Vinyl) in Special Provision 2557.

At the JUNCTION "X" (PLAN), JUNCTION "Y" AND JUNCTION "Z" DETAIL LOCATIONS:

- The details were "flipped" to accurately show the bolt, nut and lock washer direction.

At DETAIL "A":

- 9 Gauge Wire was removed from the Vinyl Coated note.

At PIPE SLEEVE DETAIL:

- The 2 way clamp look was changed to show two bolts on each side for accuracy.

Revised 04-17-2013

This standard was updated to convert reinforcing bar marks from metric to U.S. customary bar designations.

Approved, and signed, December 18, 2003.

Figure 5-397.120
Wire Fence (Design W-1) and Concrete Parapet (Type P-1) (with Seperate End Post)

Approved, and signed, December 18, 2003. Last date revised: November 06, 2013

11-06-2013 - **ARCHIVED**
This type of concrete parapet barrier with metal railing is no longer used with an end post.
The Standard Figure 5-397.120 was removed from the server and Web site and was placed in an archive file.

Revised 04-17-2013
This standard was updated to convert reinforcing bar marks from metric to U.S. customary bar designations.

Approved, and signed, December 18, 2003.

Figure 5-397.122
Concrete Barrier (Type F, TL-5) With Integral End Post (With Conc. Wearing Course)

Approved, and signed, July 25, 2005. Last date revised: 05-26-2006.

Revised 05-26-2006
Changed all instances of RAIL and RAILING *to* BARRIER.

At SECTION C-C: called out $2^1/_4$" CLR. from back face of barrier to R1602E.

Under GENERAL NOTES:
- Changed LENGTH OF "TYPE F, TL-5 BARRIER CONCRETE …" *to* LENGTH OF "TYPE F (TL-5) RAILING CONCRETE …
- Changed GUARDRAIL CONNECTION AND NAME PLATE TO BE CONSIDERED INCIDENTAL TO "TYPE F, TL-5 BARRIER CONCRETE …" *to* GUARDRAIL CONNECTION AND NAME PLATE TO BE CONSIDERED INCIDENTAL TO "TYPE F (TL-5) RAILING CONCRETE …"
- Changed BARRIER QUANTITIES ARE INCLUDED IN SUMMARY … *to* BARRIER QUANTITIES ARE LISTED IN SUMMARY …

Approved, and signed, July 25, 2005
Changed title *to* Concrete Barrier (Type F, TL-5) With Integral End Post (With Conc. Wearing Course) *from* Concrete Railing (Type F-SW) With Bridge Slab Sidewalk and Integral End Post (With Concrete Wearing Course)

Added the following information: RAIL MEETS TEST LEVEL 5 REQUIREMENTS OF NCHRP REPORT 350.

Added DESIGNER NOTES.

At SECTION A-A
- Removed bridge slab sidewalk from view
- Changed horizontal rebar spacing *to* 4 EQ. SPS. *from* 2 EQ. SPS.

At INSIDE ELEVATION OF RAILING
- Changed spacing of dowel rebar and vertical railing rebar
- At ABUTMENT WINGWALL: changed horizontal rebar to No. 16 bars
- At ABUTMENT WINGWALL: changed dimension of slope at end of rail
- At BRIDGE SUPERSTRUCTURE: changed lap dimensions for horizontal rebar
- At BRIDGE SUPERSTRUCTURE: replaced deflection joints with 1" vee joints

At SECTION C-C: removed bridge slab sidewalk from view.

At SECTION B-B: changed pipe lengths.

At Bar Bends and Bill of Reinforcement: changed dimensions.

GENERAL NOTES were revised.

03-04-2003
Changed all instances of OVERLAY *to* WEARING COURSE.

05-01-2000
Electronic (English) file created.

11-26-1985, Approved by Keith V. Benthin

Figure 5-397.124
Concrete Barrier (Type F, TL-5) With Integral End Post (w/o Conc. Wearing Course)

Approved, and signed, July 25, 2005. Last date revised: 05-26-2006.

Revised 05-26-2006
Changed all instances of RAIL and RAILING *to* BARRIER.

At SECTION C-C: called out $2^1/_4$" CLR. from back face of barrier to R1602E.

AT R1601E bar bend:
- Changed 1'-7" dimension *to* 1'-6"
- Changed 2:1 slope *to* 3:1

At BILL OF REINFORCMENT table: changed R1601E dimension of 5'-8" *to* 5'-7"

Under GENERAL NOTES:
- Changed LENGTH OF "TYPE F, TL-5 BARRIER CONCRETE …" *to* LENGTH OF "TYPE F (TL-5) RAILING CONCRETE …
- Changed GUARDRAIL CONNECTION AND NAME PLATE TO BE CONSIDERED INCIDENTAL TO "TYPE F, TL-5 BARRIER CONCRETE …" *to* GUARDRAIL CONNECTION AND NAME PLATE TO BE CONSIDERED INCIDENTAL TO "TYPE F (TL-5) RAILING CONCRETE …"
- Changed BARRIER QUANTITIES ARE INCLUDED IN SUMMARY … *to* BARRIER QUANTITIES ARE LISTED IN SUMMARY …

Approved, and signed, July 25, 2005
Changed title *to* Concrete Barrier (Type F, TL-5) With Integral End Post (W/O Conc. Wearing Course) *from* Concrete Railing (Type F-SW) With Bridge Slab Sidewalk and Integral End Post (Without Concrete Wearing Course)

Added the following information: RAIL MEETS TEST LEVEL 5 REQUIREMENTS OF NCHRP REPORT 350.

Added DESIGNER NOTES.

At SECTION A-A
- Removed bridge slab sidewalk from view
- Changed horizontal rebar spacing *to* 4 EQ. SPS. *from* 2 EQ. SPS.

At INSIDE ELEVATION OF RAILING
- Changed spacing of dowel rebar and vertical railing rebar
- At ABUTMENT WINGWALL: changed horizontal rebar to No. 16 bars
- At ABUTMENT WINGWALL: changed dimension of slope at end of rail
- At BRIDGE SUPERSTRUCTURE: changed lap dimensions for horizontal rebar
- At BRIDGE SUPERSTRUCTURE: replaced deflection joints with 1" vee joints

At SECTION C-C: removed bridge slab sidewalk from view.

At SECTION B-B: changed pipe lengths.

At Bar Bends and Bill of Reinforcement: changed dimensions.

GENERAL NOTES were revised.

03-04-2003
Changed all instances of OVERLAY *to* WEARING COURSE.

05-01-2000
Electronic (English) file created.

11-26-1985, Approved by Keith V. Benthin

Figure 5-397.125
Concrete Barrier (Type F, TL-5) With Bridge Slab Sidewalk And Integral End Post (With Conc. Wearing Course)

Approved, and signed, July 25, 2005. Last date revised: 05-26-2006.

Revised 05-26-2006
Changed all instances of RAIL and RAILING *to* BARRIER.

At SECTION C-C: called out $2^1/_4$" CLR. from back face of barrier to R1602E.

Under GENERAL NOTES:
- Changed LENGTH OF "TYPE F, TL-5 BARRIER CONCRETE …" *to* LENGTH OF "TYPE F (TL-5) RAILING CONCRETE …
- Changed GUARDRAIL CONNECTION AND NAME PLATE TO BE CONSIDERED INCIDENTAL TO "TYPE F, TL-5 BARRIER CONCRETE …" *to* GUARDRAIL CONNECTION AND NAME PLATE TO BE CONSIDERED INCIDENTAL TO "TYPE F (TL-5) RAILING CONCRETE …"
- Changed BARRIER QUANTITIES ARE INCLUDED IN SUMMARY … *to* BARRIER QUANTITIES ARE LISTED IN SUMMARY …

Approved, and signed, July 25, 2005
NEW STANDARD

Figure 5-397.126
Concrete Barrier (Type F, TL-5) With Bridge Slab Sidewalk And Integral End Post (w/o Conc. Wearing Course)

Approved, and signed, July 25, 2005. Last date revised: 05-26-2006.

Revised 05-26-2006
Changed all instances of RAIL and RAILING *to* BARRIER.

At SECTION C-C: called out $2^1/_4$" CLR. from back face of barrier to R1602E.

AT R1601E bar bend:
- Changed 1'-7" dimension *to* 1'-6"
- Changed 2:1 slope *to* 3:1

At BILL OF REINFORCMENT table: changedR1601E dimension of 5'-8" *to* 5'-7"

Under GENERAL NOTES:
- Changed LENGTH OF "TYPE F, TL-5 BARRIER CONCRETE …" *to* LENGTH OF "TYPE F (TL-5) RAILING CONCRETE …
- Changed GUARDRAIL CONNECTION AND NAME PLATE TO BE CONSIDERED INCIDENTAL TO "TYPE F, TL-5 BARRIER CONCRETE …" *to* GUARDRAIL CONNECTION AND NAME PLATE TO BE CONSIDERED INCIDENTAL TO "TYPE F (TL-5) RAILING CONCRETE …"
- Changed BARRIER QUANTITIES ARE INCLUDED IN SUMMARY … *to* BARRIER QUANTITIES ARE LISTED IN SUMMARY …

Approved, and signed, July 25, 2005
NEW STANDARD

Figure 5-397.128
Concrete Barrier (Type F, TL-5) With Glare Screen and Integral End Post (With Conc. Wearing Course)

Approved, and signed, June 14, 2006.

Approved, and signed, June 14, 2006
NEW STANDARD

Figure 5-397.129
Concrete Barrier (Type F, TL-5) With Bikeway and Integral End Post (With Conc. Wearing Course)

Approved, and signed, June 14, 2006.

Approved, and signed, June 14, 2006
NEW STANDARD

Figure 5-397.130
Solid Median Barrier Type F (with Wearing Course)

Approved, and signed, December 18, 2003. Last date revised: April 17, 2013

Revised 04-17-2013
This standard was updated to convert reinforcing bar marks from metric to U.S. customary bar designations.

Approved, and signed, December 18, 2003.

Figure 5-397.131
Split Median Barrier Type F (With Wearing Course)

Approved, and signed, October 29, 2004. Last date revised: April 17, 2013

Revised 04-17-2013
This standard was updated to convert reinforcing bar marks from metric to U.S. customary bar designations.

10-29-2004
Added note: RAIL MEETS TEST LEVEL 4 REQUIREMENTS OF NCHRP REPORT 350.

Throughout detail: changed #13 bars to #16

At INSIDE ELEVATION OF BARRIER: changed 1'-0" MAX. SPG. *to* 6" MAX. SPG. for vertical bars on bridge

At SECTION A-A and INSIDE ELEVATION OF BARRIER: additional horizontal bars added

At SECTION B-B (WEARING COURSE ON APPROACH ROADWAY): top slab reinforcement shown

At SECTION B-B (CONCRETE APPROACH ROADWAY): top slab reinforcement shown

Under GENERAL NOTES: changed CONCRETE BARRIER SHAL BE MIX NO. 3Y46. *to* CONCRETE BARRIER SHALL BE CONC. MIX 3Y46 OR 3Y46A.

Figure 5-397.132
Solid Median Barrier and Glare Screen Type F (with Wearing Course)

Approved, and signed, December 18, 2003. Last date revised: April 17, 2013

Revised 04-17-2013
This standard was updated to convert reinforcing bar marks from metric to U.S. customary bar designations.

Approved, and signed, December 18, 2003.

Figure 5-397.135
Split Median Barrier And Glare Screen Type F (Without Concrete Wearing Course)

Approved, and signed, April 22, 2004. Last date revised: April 17, 2013

Revised 04-17-2013
This standard was updated to convert reinforcing bar marks from metric to U.S. customary bar designations.

04-21-2004
Added the following information: RAIL MEETS TEST LEVEL 4 REQUIREMENTS OF NCHRP REPORT 350.

In SECTION B-B
- Top reinforcement shown
- Two rebar shown at top instead of one

Under GENERAL NOTES
- Changed CONCRETE BARRIER SHALL BE MIX NO. 3Y46. *to* CONCRETE BARRIER SHALL BE CONC. MIX 3Y46 OR 3Y46A.
- Added note ④ - ONLY ONE M1008E IS PLACED AT TOP WHEN DIMENSION IS 8" OR LESS.

Changed bar marks
- M1302E *to* M1602E
- M1303E *to* M1603E

Changed shape of M1604E.

Figure 5-397.136
Split Median Barrier And Glare Screen Type F (With Concrete Wearing Course)

Approved, and signed, April 22, 2004. Last date revised: April 17, 2013

Revised 04-17-2013
This standard was updated to convert reinforcing bar marks from metric to U.S. customary bar designations.

04-21-2004
Added the following information: RAIL MEETS TEST LEVEL 4 REQUIREMENTS OF NCHRP REPORT 350.

In SECTION B-B
- Top reinforcement shown
- Two rebar shown at top instead of one

Under GENERAL NOTES
- Changed CONCRETE BARRIER SHALL BE MIX NO. 3Y46. *to* CONCRETE BARRIER SHALL BE CONC. MIX 3Y46 OR 3Y46A.
- Added note ④ - ONLY ONE M1008E IS PLACED AT TOP WHEN DIMENSION IS 8” OR LESS.

Changed bar marks
- M1302E *to* M1602E
- M1303E *to* M1603E

Changed shape of M1604E.

Figure 5-397.137
Offset Split Median Barrier And Glare Screen Type F (With Concrete Wearing Course)

Approved, and signed, April 22, 2004. Last date revised: April 17, 2013

Revised 04-17-2013
This standard was updated to convert reinforcing bar marks from metric to U.S. customary bar designations.

04-22-2004
NEW STANDARD

Figure 5-397.138(A)
Single Slope Concrete Barrier 36" (Type S, TL-4) Integral or Semi-Integral Abutment with Guardrail Connection (Without Concrete Wearing Course)

Approved, and signed, August 24, 2016.

Approved, and signed, August 24, 2016
NEW STANDARD

Figure 5-397.138(B)
Single Slope Concrete Barrier 36" (Type S, TL-4) Integral or Semi-Integral Abutment with Guardrail Connection (With 2" Concrete Wearing Course)

Approved, and signed, August 24, 2016.

Approved, and signed, August 24, 2016
NEW STANDARD

Figure 5-397.138(C)
Single Slope Concrete Barrier 36" (Type S, TL-4) Integral or Semi-Integral Abutment with Bridge Slab Sidewalk and Guardrail Connection (Without Concrete Wearing Course)

Approved, and signed, August 24, 2016.

Approved, and signed, August 24, 2016
NEW STANDARD

Figure 5-397.138(D)
Single Slope Concrete Barrier 36" (Type S, TL-4) Integral or Semi-Integral Abutment with Bridge Slab Sidewalk and Guardrail Connection (With 2" Concrete Wearing Course)

Approved, and signed, August 24, 2016.

Approved, and signed, August 24, 2016
NEW STANDARD

Figure 5-397.139(A)
Single Slope Concrete Barrier 36" (Type S, TL-4) Parapet Abutment with Guardrail Connection (Without Concrete Wearing Course)

Approved, and signed, August 24, 2016.

Approved, and signed, August 24, 2016
NEW STANDARD

Figure 5-397.139(B)
Single Slope Concrete Barrier 36" (Type S, TL-4) Parapet Abutment with Guardrail Connection (With 2" Concrete Wearing Course)

Approved, and signed, August 24, 2016.

Approved, and signed, August 24, 2016
NEW STANDARD

Figure 5-397.139(C)
Single Slope Concrete Barrier 36" (Type S, TL-4) Parapet Abutment with Bridge Slab Sidewalk and Guardrail Connection (Without Concrete Wearing Course)

Approved, and signed, August 24, 2016.

Approved, and signed, August 24, 2016
NEW STANDARD

Figure 5-397.139(D)
Single Slope Concrete Barrier 36" (Type S, TL-4) Parapet Abutment with Bridge Slab Sidewalk and Guardrail Connection (With 2" Concrete Wearing Course)

Approved, and signed, August 24, 2016.

Approved, and signed, August 24, 2016
NEW STANDARD

Figure 5-397.140(A)
Single Slope Concrete Barrier 42" (Type S, TL-4) Integral or Semi-Integral Abutment with Guardrail Connection (Without Concrete Wearing Course)

Approved, and signed, August 24, 2016.

Approved, and signed, August 24, 2016
NEW STANDARD

Figure 5-397.140(B)
Single Slope Concrete Barrier 42" (Type S, TL-4) Integral or Semi-Integral Abutment with Guardrail Connection (With 2" Concrete Wearing Course)

Approved, and signed, August 24, 2016.

Approved, and signed, August 24, 2016
NEW STANDARD

Figure 5-397.140(C)
Single Slope Concrete Barrier 42" (Type S, TL-4) Integral or Semi-Integral Abutment with Bridge Slab Sidewalk and Guardrail Connection (Without Concrete Wearing Course)

Approved, and signed, August 24, 2016.

Approved, and signed, August 24, 2016
NEW STANDARD

Figure 5-397.140(D)
Single Slope Concrete Barrier 42" (Type S, TL-4) Integral or Semi-Integral Abutment with Bridge Slab Sidewalk and Guardrail Connection (With 2" Concrete Wearing Course)

Approved, and signed, August 24, 2016.

Approved, and signed, August 24, 2016
NEW STANDARD

Figure 5-397.141(A)
Single Slope Concrete Barrier 42" (Type S, TL-4) Parapet Abutment with Guardrail Connection (Without Concrete Wearing Course)

Approved, and signed, August 24, 2016.

Approved, and signed, August 24, 2016
NEW STANDARD

Figure 5-397.141(B)
Single Slope Concrete Barrier 42” (Type S, TL-4) Parapet Abutment with Guardrail Connection (With 2" Concrete Wearing Course)

Approved, and signed, August 24, 2016.

Approved, and signed, August 24, 2016
NEW STANDARD

Figure 5-397.141(C)
Single Slope Concrete Barrier 42" (Type S, TL-4) Parapet Abutment with Bridge Slab Sidewalk and Guardrail Connection (Without Concrete Wearing Course)

Approved, and signed, August 24, 2016.

Approved, and signed, August 24, 2016
NEW STANDARD

Figure 5-397.141(D)
Single Slope Concrete Barrier 42" (Type S, TL-4) Parapet Abutment with Bridge Slab Sidewalk and Guardrail Connection (With 2" Concrete Wearing Course)

Approved, and signed, August 24, 2016.

Approved, and signed, August 24, 2016
NEW STANDARD

Figure 5-397.142(A)
Single Slope Concrete Barrier 54" (Type S, TL-4) Integral or Semi-Integral Abutment with Guardrail Connection (Without Concrete Wearing Course)

Approved, and signed, August 24, 2016.

Approved, and signed, August 24, 2016
NEW STANDARD

Figure 5-397.142(B)
Single Slope Concrete Barrier 54" (Type S, TL-4) Integral or Semi-Integral Abutment with Guardrail Connection (With 2" Concrete Wearing Course)

Approved, and signed, August 24, 2016.

Approved, and signed, August 24, 2016
NEW STANDARD

Figure 5-397.142(C)
Single Slope Concrete Barrier 54" (Type S, TL-4) Integral or Semi-Integral Abutment with Bridge Slab Sidewalk and Guardrail Connection (Without Concrete Wearing Course)

Approved, and signed, August 24, 2016.

Approved, and signed, August 24, 2016
NEW STANDARD

Figure 5-397.142(D)
Single Slope Concrete Barrier 54" (Type S, TL-4) Integral or Semi-Integral Abutment with Bridge Slab Sidewalk and Guardrail Connection (With 2" Concrete Wearing Course)

Approved, and signed, August 24, 2016.

Approved, and signed, August 24, 2016
NEW STANDARD

Figure 5-397.143(A)
Single Slope Concrete Barrier 54" (Type S, TL-4) Parapet Abutment with Guardrail Connection (Without Concrete Wearing Course)

Approved, and signed, August 24, 2016.

Approved, and signed, August 24, 2016
NEW STANDARD

Figure 5-397.143(B)
Single Slope Concrete Barrier 54" (Type S, TL-4) Parapet Abutment with Guardrail Connection (With 2" Concrete Wearing Course)

Approved, and signed, August 24, 2016.

Approved, and signed, August 24, 2016
NEW STANDARD

Figure 5-397.143(C)
Single Slope Concrete Barrier 54" (Type S, TL-4) Parapet Abutment with Bridge Slab Sidewalk and Guardrail Connection (Without Concrete Wearing Course)

Approved, and signed, August 24, 2016.

Approved, and signed, August 24, 2016
NEW STANDARD

Figure 5-397.143(D)
Single Slope Concrete Barrier 54" (Type S, TL-4) Parapet Abutment with Bridge Slab Sidewalk and Guardrail Connection (With 2" Concrete Wearing Course)

Approved, and signed, August 24, 2016.

Approved, and signed, August 24, 2016
NEW STANDARD

Figure 5-397.144(A)
Split Median Barrier 36" (Type S, TL-4) Integral or Semi-Integral Abutment (Without Concrete Wearing Course)

Approved, and signed, August 24, 2016.

Approved, and signed, August 24, 2016
NEW STANDARD

Figure 5-397.144(B)
Split Median Barrier 36" (Type S, TL-4) Integral or Semi-Integral Abutment (With 2" Concrete Wearing Course)

Approved, and signed, August 24, 2016.

Approved, and signed, August 24, 2016
NEW STANDARD

Figure 5-397.144(C)
Split Median Barrier 36" (Type S, TL-4) Parapet Abutment (Without Concrete Wearing Course)

Approved, and signed, August 24, 2016.

Approved, and signed, August 24, 2016
NEW STANDARD

Figure 5-397.144(D)
Split Median Barrier 36” (Type S, TL-4) Parapet Abutment (With 2” Concrete Wearing Course)

Approved, and signed, August 24, 2016.

Approved, and signed, August 24, 2016
NEW STANDARD

Figure 5-397.145(A)
Split Median Barrier 42" (Type S, TL-4) Integral or Semi-Integral Abutment (Without Concrete Wearing Course)

Approved, and signed, August 24, 2016.

Approved, and signed, August 24, 2016
NEW STANDARD

Figure 5-397.145(B)
Split Median Barrier 42" (Type S, TL-4) Integral or Semi-Integral Abutment (With 2" Concrete Wearing Course)

Approved, and signed, August 24, 2016.

Approved, and signed, August 24, 2016
NEW STANDARD

Figure 5-397.145(C)
Split Median Barrier 42" (Type S, TL-4) Parapet Abutment (Without Concrete Wearing Course)

Approved, and signed, August 24, 2016.

Approved, and signed, August 24, 2016
NEW STANDARD

Figure 5-397.145(D)
Split Median Barrier 42” (Type S, TL-4) Parapet Abutment (With 2” Concrete Wearing Course)

Approved, and signed, August 24, 2016.

Approved, and signed, August 24, 2016
NEW STANDARD

Figure 5-397.146(A)
Split Median Barrier 54" (Type S, TL-4) Integral or Semi-Integral Abutment (Without Concrete Wearing Course)

Approved, and signed, August 24, 2016.

Approved, and signed, August 24, 2016
NEW STANDARD

Figure 5-397.146(B)
Split Median Barrier 54" (Type S, TL-4) Integral or Semi-Integral Abutment (With 2" Concrete Wearing Course)

Approved, and signed, August 24, 2016.

Approved, and signed, August 24, 2016
NEW STANDARD

Figure 5-397.146(C)
Split Median Barrier 54" (Type S, TL-4) Parapet Abutment (Without Concrete Wearing Course)

Approved, and signed, August 24, 2016.

Approved, and signed, August 24, 2016
NEW STANDARD

Figure 5-397.146(D)
Split Median Barrier 54" (Type S, TL-4) Parapet Abutment (With 2" Concrete Wearing Course)

Approved, and signed, August 24, 2016.

Approved, and signed, August 24, 2016
NEW STANDARD

Figure 5-397.147(A)
Solid Median Barrier 36" (Type S, TL-4) Integral or Semi-Integral Abutment (Without Concrete Wearing Course)

Approved, and signed, August 24, 2016.

Approved, and signed, August 24, 2016
NEW STANDARD

Figure 5-397.147(B)
Solid Median Barrier 36" (Type S, TL-4) Integral or Semi-Integral Abutment (With 2" Concrete Wearing Course)

Approved, and signed, August 24, 2016.

Approved, and signed, August 24, 2016
NEW STANDARD

Figure 5-397.147(C)
Solid Median Barrier 36" (Type S, TL-4) Parapet Abutment (Without Concrete Wearing Course)

Approved, and signed, August 24, 2016.

Approved, and signed, August 24, 2016
NEW STANDARD

Figure 5-397.147(D)
Solid Median Barrier 36" (Type S, TL-4) Parapet Abutment (With 2" Concrete Wearing Course)

Approved, and signed, August 24, 2016.

Approved, and signed, August 24, 2016
NEW STANDARD

Figure 5-397.148(A)
Solid Median Barrier 42" (Type S, TL-4) Integral or Semi-Integral Abutment (Without Concrete Wearing Course)

Approved, and signed, August 24, 2016.

Approved, and signed, August 24, 2016
NEW STANDARD

Figure 5-397.148(B)
Solid Median Barrier 42" (Type S, TL-4) Integral or Semi-Integral Abutment (With 2" Concrete Wearing Course)

Approved, and signed, August 24, 2016.

Approved, and signed, August 24, 2016
NEW STANDARD

Figure 5-397.148(C)
Solid Median Barrier 42" (Type S, TL-4) Parapet Abutment (Without Concrete Wearing Course)

Approved, and signed, August 24, 2016.

Approved, and signed, August 24, 2016
NEW STANDARD

Figure 5-397.148(D)
Solid Median Barrier 42” (Type S, TL-4) Parapet Abutment (With 2” Concrete Wearing Course)

Approved, and signed, August 24, 2016.

Approved, and signed, August 24, 2016
NEW STANDARD

Figure 5-397.149(A)
Solid Median Barrier 54" (Type S, TL-4) Integral or Semi-Integral Abutment (Without Concrete Wearing Course)

Approved, and signed, August 24, 2016.

Approved, and signed, August 24, 2016
NEW STANDARD

Figure 5-397.149(B)
Solid Median Barrier 54" (Type S, TL-4) Integral or Semi-Integral Abutment (With 2" Concrete Wearing Course)

Approved, and signed, August 24, 2016.

Approved, and signed, August 24, 2016
NEW STANDARD

Figure 5-397.149(C)
Solid Median Barrier 54" (Type S, TL-4) Parapet Abutment (Without Concrete Wearing Course)

Approved, and signed, August 24, 2016.

Approved, and signed, August 24, 2016
NEW STANDARD

Figure 5-397.149(D)
Solid Median Barrier 54" (Type S, TL-4) Parapet Abutment (With 2" Concrete Wearing Course)

Approved, and signed, August 24, 2016.

Approved, and signed, August 24, 2016
NEW STANDARD

Figure 5-397.154
Metal Railing (Type M-1) for Bikeways on Concrete Parapet (Type P-1)

Approved, and signed, December 2, 2015

Re-approved 12-02-2015
This standard was updated to remove all of the reinforcement and details regarding the concrete parapet, as that information is now provided on Std Figure 5-397.166. The statement regarding the railing meeting NCHRP TL-2 was also removed as that is a function of the parapet, not the railing. The title of the standard was also updated.

The following additional changes were made:

At INSIDE ELEVATION OF RAILING:
- The reinforcement was removed from the parapet.
- The top and bottom rails were changed from C 3 x 4.1 to C 3 x 6.
- Reference to the abutment wingwall and bridge superstructure were eliminated.
- A 12" minimum spacing between the rail post and adjacent control joint was added.
- The maximum post spacing was changed from 10' to 8'.
- A designer note and updated note regarding the joint opening was added.
- Added circled notes at the light pole.

At SECTION B-B (Now A-A):
- Section B-B was changed to Section A-A.
- The reinforcement was removed.
- The shape of the parapet was changed to reflect that shown on Std Figure 5-397.166.
- Added a designer note stating "For roadway design speeds greater than 35 mph, ornamental railings must be protected by a traffic barrier."

At DETAIL A and DETAIL B:
- The weld symbols were corrected, the detail was expanded, and the size of the steel end plate was added.

At RAILPOST BASE PLATE:
- The baseplate thickness was changed from ½" to ¾".
- The weld between the railpost and baseplate was changed from 3/8" to min. weld.

At END RAILPOST DETAIL:
- The channel members were changed from C 3 x 4.1 to C 3 x 6.
- The weld symbols were updated and the ¼" welds were changed to minimum weld size required by code.

At INTERMEDIATE RAILPOST DETAIL:
- The ¼" welds were changed to minimum weld size required by code.

At TYPICAL RAILPOST DETAIL:
- The channel members were changed from C 3 x 4.1 to C 3 x 6.
- The weld between the railpost and baseplate was changed from 3/8" to min. weld.
- The width and details regarding the parapet were updated to match Std Figure 5-397.166.
- The note regarding shims was removed.

The following details/tables were removed:
DEFLECTION JOINT DETAIL
RAIL RUSTICATION
GUARDRAIL CONNECTION DETAIL
SECTION B-B

The following details/tables were removed (cont'd):
SECTION C-C
BILL OF REINFORCEMENT TABLE
All reinforcement bend details

At GENERAL NOTES:
The notes were completely rewritten in active voice and updated to conform to current requirements for ornamental metal railings, including updates to the adhesive anchor requirements. New notes were added for the anchorages including minimum embedment and torque requirements. A new note was added for continuous grounding of the railing.

Revised 04-17-2013
This standard was updated to convert reinforcing bar marks from metric to U.S. customary bar designations.

Approved, and signed, December 18, 2003.

Figure 5-397.157
Structural Tube Railing (Design T-1) And Concrete Parapet (Type P-2, Tl-4) (With Integral End Post)

Approved, and signed, March 30, 2010. Last date revised: April 17, 2013

Revised 04-17-2013
This standard was updated to convert reinforcing bar marks from metric to U.S. customary bar designations.

Re-Approved 03-30-2010
Under GENERAL NOTES:

- Changed 4th note (now 3rd note) *from*: Finish all edges of rail with ½" "VEE"….. *to*: Finish all edges of rail with ½" "CHAMFER"…..
- Changed 5th note (now 4th note) *from*: Max. spacing of concrete DEFLECTION joints shall be 20 ft. *to*: Max. spacing of concrete CONTROL joints shall be 10 ft.
- Changed 7th note (now 5th note) : Added "SEE SPECIAL PROVISIONS." to the end of the note.
- Changed 8th note (now 6th note) *from*: Structural steel per MnDOT spec. 3310….. *to*: Structural steel "AND PLATE WASHERS" per Mn/DOT spec. 3310……
- Changed 12th note (now 10th note) : Replaced the words "RAILING CONCRETE" with "BARRIER CONCRETE" within the sentence.
- Changed numbered notes ② & ③: Replaced the words "DEFLECTION JOINTS" with "RAILING JOINTS" within the sentences.
- Added numbered note ⑤: See special provisions for joint sealing requirements.
- Removed note: "See superstructure sheet for joint spacing".
- ALL OF THE GENERAL NOTES: Have been updated and rearranged to reflect the "Active Voice".

At the "CONTROL JOINT" (previously called Deflection Joint)

- Changed the "DEFLECTION JOINT" to a "CONTROL JOINT" and removed the R1601E & R1602E reinforcement on each side of the control joint.
- Changed the note *from*: ℄ "Deflection" Joint. *to*: ℄ "Control Joint 10'-0" max. spacing."
- Changed the note *from*: See "Deflection" Joint Details. *to*: See "Control" Joint Details.
- Added section D-D.

Throughout the sheet: Changed the structural steel tube designation *from*: "TS" *to*: "HSS".

At the Base Plate detail:

- Changed the Base Plate dimensions *from*: 1'-2 ½" x 9 ½" *to*: 1'-4" x 9 ½", keeping the post centered in the 1'-4" direction and no change in the 9 ½" direction.
- Changed the Base Plate holes *from*: 1 3/16" dia. *to*: 1 3/16" x 2" slotted holes with 2 ¼" dimension from the edge of the plate to the center of the slotted holes. (Slotted direction of the holes along length of railing).

At the Anchor detail:

- Changed the note *from*: "2" Thread Proj. (Typ.)" *to*: "2" Min. 2 ¼" Max. Thread Proj. (Typ.)"
- Added note: 3" Dia. x ¼" (15/16"ID) Circular Plate Washer Per Mn/DOT spec.3310.

At Section G-G:

- Rotated the section on the sheet for directional correctness to match the other details on the sheet and added "Anchor Bar Alternate" under the title.
- Added an additional Section G-G Detail to the sheet showing an optional "Anchor Plate Alternate".

Replaced and relocated the "Deflection Joint Details" with "Control Joint Details" showing the vee joint details.

In the Bill of Reinforcement For Parapet:

- Changed the bar length *from*: 5'11" *to*: 6'-1" at the R1602E location correcting the total length.

Revised 10-22-2009

Under GENERAL NOTES:

- Added note: "THE METAL RAILING SHALL BE CONTINIOUSLY GROUNDED, SEE THE SPECIAL PROVISIONS. REFER TO THE ELECTRICAL PLANS AND ELECTRICAL SPECIAL PROVISIONS FOR DETAILS REGARDING BONDING MULTIPLE ELECTRICAL GROUNDING SYSTEMS.

Re-Approved 10-09-2009

Under GENERAL NOTES:

- changed 8th note from: "STRUCTURAL STEEL PER Mn/DOT SPEC. 3309. STRUCTURAL TUBES ARE A.S.T.M. A500, GRADE B PER Mn/DOT SPEC. 3362" to "STRUCTURAL STEEL PER Mn/DOT SPEC. 3310. STRUCTURAL TUBES ARE A.S.T.M. A500, GRADE B PER Mn/DOT SPEC. 3361".
- Deleted numbered note ④ and added new note ④ reading: "SUBSTITUTION OF CHEMICAL ANCHOR RODS FOR CAST-IN-PLACE ANCHORAGE IS NOT PERMITTED".

At Section B-B: Changed the dimension from the top of the concrete parapet to the top longitudinal reinforcement from 5" to 4".

At Sections C-C and D-D: Enlarged the details for clarity.

Added Section G-G: showing the ¼" x 1½" x 1'-2" anchorage bar assembly.

At "Anchor Detail": Removed reference to chemical anchorages. Added the ¼" x 1½" x 1'-2" bar assembly to the detail with note 7/8" x 10" ANCHOR RODS, Mn/DOT SPEC. 3385 TYPE C, WITH TWO HEX NUTS AND WASHERS". Added section arrows for section G-G.

At "Base Plate" Detail: Changed the size of the weld from 5/16 to 3/8 at the weld symbol.

Revised 06-14-2006

Changed standard title: STRUCTURAL TUBE RAILING (DESIGN T-1) AND CONCRETE PARAPET (TYPE P-2) (WITH INTEGRAL END POST) *to* STRUCTURAL TUBE RAILING (DESIGN T-1) AND CONCRETE PARAPET (TYPE P-2, TL-4) (WITH INTEGRAL END POST)

At INSIDE ELEVATION VIEW: changed drawing to show DEFLECTION JOINT is spaced 1'-0" (MIN.) from centerline of rail post.

At ANCHOR DETAILS: added anchor rod dimensions.

Under GENERAL NOTES:

- changed LENGTH OF "TYPE P-2 RAILING CONCRETE (3Y46 OR 3Y46A)" FOR PAYMENT SHALL BE MEASURED BETWEEN THE OUTSIDE FACES OF THE CONCRETE PARAPET. *to* LENGTH OF "TYPE P-2 (TL-4) RAILING CONCRETE (3Y46 OR 3Y46A)" FOR PAYMENT SHALL BE MEASURED BETWEEN THE OUTSIDE FACES OF THE CONCRETE PARAPET.
- changed LENGTH OF "STRUCTURAL TUBE RAILING, DESIGN T-1" FOR … *to* LENGTH OF "STRUCTURE TUBE RAILING DESIGN T-1" FOR …
- changed GUARDRAIL CONNECTION TO BE INCLUDED IN THE PRICE BID FOR OTHER ITEMS. *to* GUARDRAIL CONNECTION AND NAME PLATE TO BE CONSIDERED INCIDENTAL TO "TYPE P-2 (TL-4) RAILING CONCRETE (3Y46 OR 3Y46A)".

- changed PRICE BID FOR "STRUCTURAL TUBE RAILING, DESIGN T-1" INCLUDES … *to* PRICE BID FOR "STRUCTURE TUBE RAILING DESIGN T-1" INCLUDES …
- changed ALL MATERIAL IN THE CONCRETE PARAPET IS INCLUDED IN … *to* ALL MATERIAL IN THE CONCRETE PARAPET IS LISTED IN …

Revised 07-02-2004

At STRUCTURAL TUBE RAIL DETAIL

- Changed two weld symbols.

At RAIL SLEEVE DETAIL

- Changed TS 9" x 3" x $^{1}/_{4}$" (PLATE WITH $^{3}/_{16}$" PLATE FOR $9^{3}/_{8}$" x $3^{3}/_{8}$" FINISHED SIZE). *to* TS 9" x 3" x $^{1}/_{4}$", PLATED TO $9^{3}/_{8}$" x $3^{3}/_{8}$" FINISHED SIZE – OR - FORMED TUBE $9^{3}/_{8}$" x $3^{3}/_{8}$" x $^{1}/_{4}$"

At RAIL END DETAIL

- Changed weld symbol
- Changed $^{1}/_{4}$" PLATE, BEVEL OUTSIDE EDGE *to* $^{1}/_{4}$" PLATE
- Changed 2" *to* $^{3}/_{4}$"
- Changed CL $^{1}/_{2}$" DIA. WEEP HOLE AT UNDERSIDE CENTER (TYP.) *to* CL $^{1}/_{2}$" DIA. WEEP HOLE ON UNDERSIDE AT $^{3}/_{4}$" FROM BACK FACE OF TYBE (TYP.)

Approved, and signed, December 18, 2003

Figure 5-397.158
Structural Tube Railing (Design T-2) For Concrete J or F Barrier

Approved, and signed, December 2, 2015.

Re-approved: 12-02-2015
The standard was updated to include the following changes; moved the railing spindles to the outside of the railing, added specific material requirements to the turnbuckle, stud socket, and other cable components, improved the welding details, improved rail expansion details at the posts, added a cover plate over the cable end connection, and added new anchorage requirements. The title was also updated.

At OUTSIDE ELEVATION OF RAILING:
- Moved the spindles to the outside of the railing
- Added a cover plate over the cable end connection.
- Added the guardrail connection plate.
- Updated the cable, turnbuckle and cable end connection notes and material requirements.
- Changed the rails from TS sections to HSS sections.
- Removed the deflection joints and added control joints.
- Added an additional expansion end and fixed end rail post of right side of elevation.
- Added an expansion joint in the barrier with circled notes.

At WELDS AT END PANEL:
- Updated the weld symbols and notes.

At CABLE ANCHOR PLATE DETAIL:
- Revised the anchorage note and circled notes.

Added COVER PLATE DETAIL

At DETAIL “A”
- Changed the rail from TS section to HSS section.

At DETAIL “B”
- Modified the note regarding the slotted hole.
- Added weld details.

Added DETAIL “C”
- Details the size of the bent plate and the weld of the bent plate to the rail post.

Added DETAIL “D”
- Details the connection of the spindles to the longitudinal rails.

Removed BENT PLATE DETAIL:
- Now included in DETAIL “C”.

At INTERMEDIATE RAILPOST DETAIL:
- Modified the bent plate dimensions and added circled notes 7 and 9 to allow more than ½” of movement for the panel at the end expansion joint.

At SECTION A-A:
- Updated the barrier to an F shape with an aesthetic coping.
- Changed the rails from TS sections to HSS sections.
- Updated the anchorage length and notes about the anchorage.

At SECTION A-A (cont'd):
- Added a designer note regarding the anchorage length.
- Moved the spindles to the outside of the rail and updated the cable requirements.
- Modified the plate and weld details at the top of the post.
- Added reference to details "C" and "D".

Under GENERAL NOTES:
- The notes were completely rewritten in active voice and updated to conform to current requirements for ornamental metal railings, including updates to the adhesive anchor requirements. New notes were added for the anchorages including minimum embedment and torque requirements. A new note was added for continuous grounding of the railing and for bolts in slotted holes. New notes were added to specify specific material requirements for the cable turnbuckles and connection hardware.
- A new circled note 9 was added and circled notes 7 thru 13 were renumbered.

<u>10-29-2004</u>
Added note: RAIL MEETS TEST LEVEL 4 REQUIREMENTS OF NCHRP REPORT 350.

At OUTSIDE ELEVATION OF RAILING: changed LEFT-HAND TURNBUCKLE JAW ($^1/_2$"-13 x 9") *to* LEFT-HAND TURNBUCKLE JAW ($^1/_2$"-13 x 9"), HAND TIGHTEN FIRMLY

At END RAILPOST DETAIL and INTERMEDIATE RAILPOST DETAIL: changed $^7/_8$" DIA. HOLE *to* $^5/_8$" DIA. HOLE

At SECTION A-A:
- $^5/_{16}$" dia. (7 x 19) cable shown and labeled
- Added note: SHIM AND CHALK AS NEEDED FOR PROPER GRADE AND ALIGNMENT. SEE SPECIAL PROVISION FOR REQUIREMENTS.

At DETAIL "B":
- Added centerline and dimensioning to vent hole
- Changed $1^3/_8$" DIA. VENT HOLE *to* $1^3/_8$" DIA. THROUGH HOLE and pointed to centerline

Under GENERAL NOTES:
- Changed note ⑥: $3^1/_2$" (AT TYP. EXP. END) … *to* $1^1/_2$" (AT TYP. EXP. END) …

Approved, and signed, October 29, 2004.

Figure 5-397.160
Ornamental Metal Railing with Fence (Design T-3 Parapet Mount)

Approved, and signed, November 06, 2013. Last date revised: November 20, 2014

Revised 11-20-2014
At SECTION THROUGH RAILING:

- Removed the railpost cap size and weld symbol at the top of the post.
- Added the note: "Vent hole. See railpost cap detail" to the top of the post.
- Removed the "TYP." From the weld symbol at the railpost / base plate location.

At PARTIAL ELEVATION OF ORNAMENTAL METAL RAILING WITH FENCE (DESIGN T-3):

- Changed the look of the chain link fence to be more uniform throughout the detail.

ADDED: RAILPOST CAP DETAIL to the standard.
Under GENERAL NOTES: (sequence of notes has been adjusted, present sequence is listed below)

- Changed the 2nd note to read: Payment length shall be measured as the out to out length along the centerline of the railing between the outside ends, with deductions for the length of concrete posts, if present.
- Changed the 5th note to read: Coat the galvanized railing, base plates, and protruding portions of bolts, nuts, anchors, and washers.
- Changed the 8th note to read: Always use chain link fence with this railing. Refer to spec. 2557 for chain link fabric and tie requirements.
- Changed the 9th note to read: See special provisions for requirements not included on this sheet.
- Changed the 10th note to read: Drill ½" dia. max. vent holes on the underside of rail tubes as necessary to facilitate galvanizing.
- Moved "Adhesive Anchor" numbered note ① to numbered note ⑦ and also made the numbered note change at the Anchor Detail.
- New numbered note ① reads: Drill vent hole in the rail post within 2" of the underside of the cap, on the non-traffic side of the post as necessary to facilitate galvanizing. Maximum hole size is ½"dia.

Approved, and signed, November 06, 2013
NEW STANDARD

Figure 5-397.161
Ornamental Metal Railing with Fence (Design T-3 Curb Mount)

Approved, and signed, November 06, 2013. Last date revised: May 25, 2016

Revised 05-25-2016

Throughout the standard:

- Changed the curb height from 10" to 6".
- Minor drafting change to the size of the break lines.
- Adjusted dimensions in the "Railing Height Table" columns A and B to reflect the curb height change.

At PARTIAL ELEVATION OF ORNAMENTAL METAL RAILING WITH FENCE (DESIGN T-3):

- Modified the detail to require railing cantilevers at both posts adjacent to an expansion joint. This allows adequate room to install a cover plate over the joint in the curb.
- Changed the railing post dimensions to 2'-6" max., 2'-0" min. at the expansion joint location.
- Changed the look of the end rail cantilever to match the scale of the rail cantilevers at the expansion joint.

At Detail "A": changed the look of the detail to clarify the cantilever ends at the expansion joint location.

At the Anchorage Detail:

- Changed the curb height and removed one row of reinforcement.
- Added note: To maximize clearances for anchorages, place top of outside longitudinal bars 2" from deck surface (Typ.).

Under GENERAL NOTES:

- Changed the first word in the 3rd note from "USE" to "PROVIDE".
- Changed numbered note ③: The "Proof Load" portion of the note was changed from 9.6 kips to 8.8 kips.

Revised 11-20-2014

At SECTION THROUGH CURB:

- Removed the railpost cap size and weld symbol at the top of the post.
- Added the note: "Vent hole. See railpost cap detail" to the top of the post.
- Removed the "TYP." From the weld symbol at the railpost / base plate location.

At PARTIAL ELEVATION OF ORNAMENTAL METAL RAILING WITH FENCE (DESIGN T-3):

- Changed the look of the chain link fence to be more uniform throughout the detail.

ADDED: RAILPOST CAP DETAIL to the standard.

Under GENERAL NOTES: (sequence of notes has been adjusted, present sequence is listed below)

- Changed the 2nd note to read: Payment length shall be measured as the out to out length along the centerline of the railing between the outside ends, with deductions for the length of concrete posts, if present.
- Changed the 5th note to read: Coat the galvanized railing, base plates, and protruding portions of bolts, nuts, anchors, and washers.
- Changed the 8th note to read: Always use chain link fence with this railing. Refer to spec. 2557 for chain link fabric and tie requirements.
- Changed the 9th note to read: See special provisions for requirements not included on this sheet.
- Changed the 10th note to read: Drill ½" dia. max. vent holes on the underside of rail tubes as necessary to facilitate galvanizing.
- Moved "Adhesive Anchorage" numbered note ① to numbered note ③ and also made the numbered note change at the Anchor Detail.
- New numbered note ① reads: Drill vent hole in the rail post within 2" of the underside of the cap, on the non-traffic side of the post as necessary to facilitate galvanizing. Maximum hole size is ½"dia.

CHANGED: the designer note which refers to the Railing Height Table to read: Choose one height from railing height table above and cross out other heights. Rail heights greater than shown require redesign.

Approved, and signed, November 06, 2013
NEW STANDARD

Figure 5-397.162
Ornamental Metal Railing (Design T-4 Parapet Mount)

Approved, and signed, November 06, 2013. Last date revised: May 25, 2016

Revised 05-25-2016
Under GENERAL NOTES:

- Changed the first word in the 3rd note from "USE" to "PROVIDE".
- Removed from 3rd note: "Finial Caps shall be spec. 3322."

Revised 11-20-2014
REMOVED: the RAILPOST CAP MACHINE BOLT DETAIL and DETAIL "D" from the standard.
At SECTION B-B:

- Removed the cap screw note at the top of the railpost.
- Added the note: "Vent hole. See railpost cap detail" to the top of the post.
- Removed the "TYP." From the weld symbol at the railpost / base plate location.

ADDED: RAILPOST CAP DETAIL to the standard.
Under GENERAL NOTES: (sequence of notes has been adjusted, present sequence is listed below)

- Changed the 2nd note to read: Payment length shall be measured as the out to out length along the centerline of the railing between the outside ends, with deductions for the length of concrete posts, if present.
- Changed the 5th note to read: Coat the galvanized railing, base plates, and protruding portions of bolts, nuts, anchors, and washers.
- Changed the 8th note to read: See special provisions for requirements not included on this sheet.
- Changed the 9th note to read: Drill ½" dia. max. vent holes on the underside of rail tubes as necessary to facilitate galvanizing.
- Moved "Adhesive Anchorage" numbered note ① to numbered note ⑧ and also made the numbered note change at the Anchor Detail.
- New numbered note ① reads: Drill vent hole in the rail post within 2" of the underside of the cap, on the non-traffic side of the post as necessary to facilitate galvanizing. Maximum hole size is ½"dia.
- Changed the beginning of numbered note ④ *from:* The contractor shall coordinate…. *to:* Contractor to coordinate…
- Changed numbered note ⑥ to read: Provide a pyramid top style steel cap welded to top of post with a surface finish of 1000 micro-inch, or smoother, prior to galvanizing.

CHANGED: the Designer Note which refers to the Railing Height Table to read: Choose one height from railing height table above and cross out other heights. Rail heights greater than shown require redesign.

Approved, and signed, November 06, 2013
NEW STANDARD

Figure 5-397.163
Ornamental Metal Railing (Design T-4 Curb Mount)

Approved, and signed, November 06, 2013. Last date revised: May 25, 2016

Revised 05-25-2016
Throughout the standard:
- Changed the curb height from 10" to 6".
- Adjusted dimensions in the "Railing Height Table" columns A and B to reflect the curb height change.

At INSIDE ELEVATION OF RAILING:
- Modified the detail to require railing cantilevers at both posts adjacent to an expansion joint. This allows adequate room to install a cover plate over the joint in the curb.
- Changed the railing post dimensions to 2'-6" max., 2'-0" min. at the expansion joint location.

At Detail "A": changed the look of the detail to clarify the cantilever ends at the expansion joint location.
At the Anchorage Detail:
- Changed the curb height and removed one row of reinforcement.
- Added note: To maximize clearances for anchorages, place top of outside longitudinal bars 2" from deck surface (Typ.).

Under GENERAL NOTES:
- Changed the first word in the 3rd note from "USE" to "PROVIDE".
- Removed from 3rd note: "Finial Caps shall be spec. 3322."
- Changed numbered note ③: The "Proof Load" portion of the note was changed from 9.6 kips to 8.8 kips.

Revised 11-20-2014
REMOVED: the RAILPOST CAP MACHINE BOLT DETAIL and DETAIL "D" from the standard.
At SECTION B-B:
- Removed the cap screw note at the top of the railpost.
- Added the note: "Vent hole. See railpost cap detail" to the top of the post.
- Removed the "TYP." From the weld symbol at the railpost / base plate location.

ADDED: RAILPOST CAP DETAIL to the standard.
Under GENERAL NOTES: (sequence of notes has been adjusted, present sequence is listed below)
- Changed the 2nd note to read: Payment length shall be measured as the out to out length along the centerline of the railing between the outside ends, with deductions for the length of concrete posts, if present.
- Changed the 5th note to read: Coat the galvanized railing, base plates, and protruding portions of bolts, nuts, anchors, and washers.
- Changed the 8th note to read: See special provisions for requirements not included on this sheet.
- Changed the 9th note to read: Drill ½" dia. max. vent holes on the underside of rail tubes as necessary to facilitate galvanizing.
- Moved "Adhesive Anchorage" numbered note ① to numbered note ④ and also made the numbered note change at the Anchor Detail.
- New numbered note ① reads: Drill vent hole in the rail post within 2" of the underside of the cap, on the non-traffic side of the post as necessary to facilitate galvanizing. Maximum hole size is ½"dia.
- Changed numbered note ③ to read: Provide a pyramid top style steel cap welded to top of post with a surface finish of 1000 micro-inch, or smoother, prior to galvanizing.

CHANGED: the Designer Note which refers to the Railing Height Table to read: Choose one height from railing height table above and cross out other heights. Rail heights greater than shown require redesign.

Approved, and signed, November 06, 2013
NEW STANDARD

Figure 5-397.166
Concrete Parapet (Type P-1) with Integral End Post (Without Concrete Wearing Course)

Approved, and signed, November 06, 2013.

Approved, and signed, November 06, 2013
NEW STANDARD

Figure 5-397.167
Concrete Curb for Use With Ornamental Metal Railing

Approved, and signed, November 06, 2013. Last date revised: August 24, 2016

Revised 08-24-2016
At INSIDE ELEVATION OF CONCRETE CURB – (Integral/semi-integral abutment option):
- Changed the lap length of the curb longitudinal bars from 2'-4" to 1'-11".

At INSIDE ELEVATION OF CONCRETE CURB – (Parapet abutment option):
- Changed the lap length of the curb longitudinal bars from 2'-4" to 1'-11".
- At left side of expansion joint – added joint in the curb to match the joint at the end of the end block. Added 1'-4" dimension, added note "Control Joint at End Block (End of Bridge)", added Designer Note "Increase Depending on Skew". Added one more 6" spacing of C402E bars.

At ABUTMENT TYPE Table
- Added bubble around the Designer Note beneath the table.

Revised 05-25-2016
Throughout the standard:
- Changed the curb height from 10” to 6”.

At INSIDE ELEVATION OF CONCRETE CURB – (Integral/semi-integral abutment option):
- Changed all the curb ties from a number 5 bar size to a number 4.
- Changed the Saw Cut Gap dimension from 1/8” to 1/4”.
- Added to the sub-title: (See Abutment Type Table Below)

At Section A-A:
- Removed one row of reinforcement and changed the curb ties from a number 5 bar size to a number 4.
- Changed the tie bar projection to 4”. Also added numbered note ③ dimensioning longitudinal bars.
- Removed all reinforcement and notes within the outboard wingwall.

At Section B-B:
- Removed one row of reinforcement and changed the curb ties from a number 5 bar size to a number 4.
- Changed the tie bar projection to 4”. Also added numbered note ③ dimensioning longitudinal bars.

Added: INSIDE ELEVATION OF CONCRETE CURB detail for the Parapet/Expansion Joint option.
Added: “OR MASH” to the end of the crash test level information note.
Added: A selection box for “ABUTMENT TYPE with designer note.
Changed: Bubbled designer note by adding or updating notes for Lighting, Anchorages, and Details not being used.
Updated: The Bar Bend details and Bill of Reinforcement to accommodate the curb height and bar size change.
Removed: Detail “A” from the standard
Under GENERAL NOTES:
- Changed the 2nd note to read: Measure payment length between the outside ends of the concrete curb.
- Changed 3rd note to: Concrete Curb = 81 LBS./FT. (0.020 CU. YDS./FT.)
- Changed within the 5th note: The wording “shall be” was changed to “is”.

Added numbered note ③: To maximize clearances for anchorages, place top of outside longitudinal bars 2" from deck surface (typ.).

Approved, and signed, November 06, 2013
NEW STANDARD

Figure 5-397.173
Concrete Barrier (Type P-4, TL-4) With Integral End Post (With Conc. Wearing Course)

Approved, and signed, July 25, 2005. Last date revised: April 17, 2013

Revised 04-17-2013
This standard was updated to convert reinforcing bar marks from metric to U.S. customary bar designations.

Revised 08-10-2006
Reconfigured end of barrier:
- changed height dimension of 9" *to* 5"
- changed longitudinal dimension of 1'-10" *to* 1'-0"
- changed rebar dimensions of R1603E, R1604E, R1605E and R1307E

Revised 05-26-2006
Changed all instances of RAIL and RAILING *to* BARRIER.

Under GENERAL NOTES:
- Changed LENGTH OF "TYPE P-4, TL-4 BARRIER CONCRETE …" *to* LENGTH OF "TYPE P-4 (TL-4) RAILING CONCRETE …
- Changed GUARDRAIL CONNECTION, CORK AND NAME PLATE TO BE CONSIDERED INCIDENTAL TO "TYPE P-4, TL-4 BARRIER CONCRETE …" *to* GUARDRAIL CONNECTION, CORK, AND NAME PLATE TO BE CONSIDERED INCIDENTAL TO "TYPE P-4 (TL-4) RAILING CONCRETE …"
- Changed BARRIER QUANTITIES ARE INCLUDED IN SUMMARY … *to* BARRIER QUANTITIES ARE LISTED IN SUMMARY …

Revised 10-26-2005
At R1601E bar bend: Changed 1'-0" dimension *to* $10^1/_2$"

Approved, and signed, July 25, 2005
NEW STANDARD

Figure 5-397.202
5 FT. WIRE FENCE (DESIGN W-1) FOR PEDESTRAIN BRIDGES

Approved, and signed, January 5, 2017.

Approved 01-05-2017
REMOVED from the STANDARD:
- Pipe Anchorage for Fence Posts-Type1 and replaced it with detail "Bolt Anchorage for Intermediate Fence Posts②".

Under GENERAL NOTES:
- Removed and replaced all notes and numbered note ①. Also added numbered note ②.

At the POST CONNECTIONS ON STAIRWAY - JUNCTION "T", AT THE GROOVED WASHER, AND AT THE JUNCTION "Y" DETAILS:
- Removed the sub title "An Approved Alternate Will Be Considered".

At the TYPICAL SECTION THROUGH WALKWAY:
- Changed the fence post size from 2 ½" to 3" dia. Which changed the weight to 7.58 lbs/ft.
- Increased the distance from the center of the post to edge of walkway from 5 ½" to 8 ½".
- Changed all the horizontal dimensions to "blank" dimensions to be filled in.
- Added the curb to the walkway.
- Changed the note at the top of the fence from "Knuckled Edge" to "Knuckled Selvage Top and Bottom" and removed the note at the bottom of the fence.

At the BOLT ANCHORAGE FOR FENCE POSTS – TYPE 2:
- Updated the detail name to "Bolt Anchorage for Fence Posts at End of Slab ①".
- Removed the mortar, the mortar notes and the base plate weld symbols.
- Added the concrete curb, updated the base plate dimensions and details, rescaled the pipe and pipe sleeve to proper sizes and updated the edge of coping to ℄ of post dimensions.

At the FABRIC TIE DETAIL:
- Changed note from: "9 GA. Wire Tie 1'-0" Max. Spg." to: "Vinyl Coated Fabric Tie @ 1'-0" Max. Spg."

At the JUNCTION "Y" AND JUNCTION "X" LOCATIONS:
- Added "Inside Face of Fence" with leader line pointing to both details.

At the PART ELEVATION ON STAIRWAY AND THE PART ELEVATION ON RAMP:
- Changed the word "Part" to "Partial" in the name for the details
- Added the curb with labeling of ramp and curb.
- Removed all Type 1 anchorages and dimensions.
- Added note "Knuckled Selvage Top and Bottom".
- Within the Stretcher Bar note, changed "Mn/DOT Spec." to "PER Spec."

Added DESIGNER NOTE:
- "If handrail pipe is not required, update this plan sheet to show chain link fence on inside of walkway".

At the TITLE BLOCK:
- Removed the word "Modified" from the approved block under the Standard Figure number.

(No record of revisions on date of April 23, 2003)

Approved, and signed, NOVEMBER 26, 1985
NEW STANDARD

Figure 5-397.205
5 FT. WIRE FENCE (DESIGN W-1) FOR PEDESTRAIN BRIDGES

Approved, and signed, January 5, 2017.

Approved 01-05-2017
REMOVED from the STANDARD:
- Detail "D" Type 1 Anchorage option.
- Pipe Anchorage for Fence Posts-Type1 and replaced it with detail Bolt Anchorage for Fence Posts.

Under GENERAL NOTES:
- Removed and replaced all notes and added numbered notes ① and ②.

At the TYPICAL SECTION THRU FENCE:
- Changed the fence post size from 2 ½" to 3" dia. Which changed the weight to 7.58 lbs/ft.
- Increased the distance from the center of the post to edge of walkway from 5 ½" to 8 ½".
- Added the curb to the pedestrian walkway.
- Changed the note at the top of the fence from "Barbed Edge" to "Knuckled Selvage Top and Bottom" and removed the "Knuckled Edge" note from the bottom of the fence.

At the SUSPENDED POST DETAILS:
- Changed the sub title for Detail "D" from "Use With Alternate Anchorage" to "Use With Type B Anchorage ②"

At the PIPE SLEEVE DETAIL, AND AT THE EXPANSION JOINT DETAIL:
- Added numbered note ① to the end of the title name.

At the FABRIC TIE DETAIL:
- Changed note, "9 GA. Wire Fabric Tie @ 1'-0" Max. Spg." to: "Vinyl Coated Fabric Tie @ 1'-0" Max. Spg."
- Changed the Elevation name to "Partial Elevation".

THROUGHOUT the STANDARD FIGURE:
- Underlined all Detail Titles.

At the PART ELEVATION:
- Changed the title name to "PARTIAL ELEVATION".
- Changed the 10'-0" Max. Spacing to 8'-0" Max. Spacing.
- Added a vertical break line to the Elevation to better represent the 8'-0" spacing.
- Added the concrete curb to the detail.
- Removed the dashed Type 1 anchorage option from the detail.
- Changed the look to show the knuckled selvage on both the top and bottom of the fencing.

(No record of revisions on date of August 26, 1994)

Approved, and signed, NOVEMBER 26, 1985
NEW STANDARD

Figure 5-397.300
RIPRAP SLOPE WITH GEOTEXTILE FILTER (SLOPES 1:2 AND FLATTER)

Approved, and signed, January 5, 2017.

Approved 01-05-2017
Under GENERAL NOTES:

- The notes were updated to use active voice.
- Removed "Mn/DOT" within the notes when pertaining to Spec numbers.

At SECTION A-A AND SECTION D-D:

- Changed the note from "2" Polystyrene" to "2" Type A or B Polystyrene".

(No record of revisions on date of October 11, 2000)

Approved, and signed, December 06, 1989
NEW STANDARD

Figure 5-397.301
Concrete Slope Paving Under Bridges

Approved, and signed, September 26, 2003. Last date revised: May 25, 2016

Revised 05-25-2016
Throughout the Standard: Added an "E" extension to all the reinforcement bars to represent Epoxy Coated.
At LAYOUT FOR SLOPES AT ABUTMENTS WITH 8' OR GREATER EXPOSURE:

- Changed the side wall to abutment corners to a tapered meeting point for better drainage/erosion control.

At LAYOUT FOR SLOPES BETWEEN BRIDGES:

- Flared the top wall out to meet the wing walls for better drainage/erosion control.
- Changed the Top Wall note to "Grade to top of slope paving."
- Added section C-C at flared portion of top wall.

Added "BROOMED SURFACE TREATMENT" detail to the standard.
At section C-C:

- Changed the thickness of the top wall to 1'-6" and adjusted the reinforcement accordingly.

Under CONCRETE & REINFORCEMENT UNIT QUANTITIES:
Changed the reinforcement pounds for numbered notes ①②③ and ④.

Revised 09-11-2014
At DETAIL "B" Abutments without Rustication

- Changed the note pointing to the rubber belting *From:* 18" wide, 1/4" thick reinforced rubber belting. Overlap splices 6" *To:* 16" wide by 1/8" min. thick reinforced rubber belting, gray in color, with no mold release. Overlap splices 6"
- Changed the note for the rubber belting attachment *From:* ¼" dia. x 2 ½" long threaded concrete anchors with 1 ½" galvanized fender washers at 2'-0" maximum spacing.
  To: ¼" dia. x 1 ¼" long stainless steel concrete screws with 1 ½" stainless steel fender washers at 1'-0" maximum spacing.
- In the abutment to belting sealant note, changed the reference within the note *From:* "MnDOT 3722 or 3728" *TO:* "Spec. 3722 or 3728"
- Added a 1 ½" dimension to show the distance from the top of the belting to the belting fasteners.
- Changed the dimension of the belting along the slope paving from 1'-0"± to 10"±

Revised 04-17-2013
This standard was updated to convert reinforcing bar marks from metric to U.S. customary bar designations.

Revised 02-27-2013
Changed detail name *from:* "Layout for Slopes at High Abutments" *to:* Layout for Slopes at Abutments with 8' or Greater Exposure"
At same detail:

- Removed the △ 2'-0" dimension from the side of the abutment and added it to both sides of the slope paving with "Outside Face of Bridge Coping" note.
- Removed: The section D-D section arrows from the detail.

At section A-A:

- Removed the 2" dimension from the "Polystyrene type A or B……." note.
- Removed the 2" dimension showing the polystyrene thickness.
- Changed note: See Detail "A" *to* See Detail "A" or "B"

Changed "DETAIL "A" Slope Paving as per Mn/DOT Spec. 2514" *to* "DETAIL "B" Abutments without Rustication"

- Changed the notes and dimensions in the detail as per the new Anchored Rubber Belting.

Changed detail name *from:* "SECTION D-D High Abutments with Rustication" *to* "DETAIL "A" Abutments with Rustication"

- Modified: Detail "A" *from* a sloped front face *to* a vertical front face.
- Removed the ¾" dimension from the note pointing to the rustication groove.

Eliminated Section D-D "High Abutments Without Rustication"

Under GENERAL NOTES: Added note: "Slope Paving per Spec. 2514."

Added the Designer Note regarding rustication and slope paving side walls.

At SECTION B-B:

- Added a bubbled note (referencing the Designer Note) at the 4" vertical dimension at the side wall.

Approved, and signed, September 26, 2003

Figure 5-397.302
Stabilized Aggregate Slope Paving Under Bridges

Approved, and signed, September 26, 2003. Last date revised: September 11, 2014

Revised 09-11-2014

At SECTION A-A:

- Changed note pointing to the geotextile *From:* Place geotextile, Spec. 3733, under aggregate in areas under bridge deck drain to reduce erosion from splashing. *To:* Place geotextile, Spec. 3733 Type 3, under aggregate in areas under bridge deck drain to reduce erosion from splashing.

Revised 02-27-2013

At LAYOUT FOR SLOPES AT HIGH ABUTMENTS:

- Removed the △ 2'-0" dimension from the side of the abutment and added it to both sides of the slope paving with "Outside Face of Bridge Coping" note.

At SECTION A-A:

- Added note with leader line "Bituminous Surface Coating per Spec. 2514."
- Added an additional 2" x 6" treated timber plank to the view to show them side by side (doubled).
- Changed the note pointing to the timber planks to read "Double Nominal 2" x 6" Treated Timber Plank Spec. 3426 (1500P.S.I.) ①

At SECTION B-B:

- Added an additional 2" x 6" treated timber plank to the view to show them side by side (doubled).
- Changed the note pointing to the timber planks to read "Double Nominal 2" x 6" Treated Timber Plank Spec. 3426 (1500P.S.I.) ①

At SECTION C-C:

- Added an additional 2" x 6" treated timber plank to the view to show them side by side (doubled).
- Changed the note pointing to the timber planks to read "Double Nominal 2" x 6" Treated Timber Plank Spec. 3426 (1500P.S.I.) ①

Changed GENERAL NOTE to read "GENERAL NOTES"

Under GENERAL NOTES:

- Added note "Refer to Specification 2514 for additional information."
- Added numbered note ① "Preservative Treatment per Spec. 3491, Table 3491-1, product and usage CategoryE2, AWPA Use Category UC4B. Refer to MNDOT Approved Products List."

Approved, and signed, September 26, 2003

Figure 5-397.309
Riprap Slopes With Geotextile Filter (Slopes 1:2 And Flatter)

Approved, and signed, May 24, 2011. Last date revised: January 5, 2017

Revised 01-05-2017
Under GENERAL NOTES:

- Changed numbered note ② to read: "Place riprap starting from the bottom of the slope. Do not place rip rap in trench until riprap has been placed on entire slope beneath the trench".

At the "DIMENSION T" CHART:

- Added to the bottom of the chart CLASS V = 2'-6".

At DETAIL"B" AND DETAIL "D":

- Removed the numbered note ② and leader line from the underside of the bench.

At the THREE SECTION A-A LOCATIONS:

- Added numbered note ② at both the passage bench and trench locations.

Revised 09-11-2014
UNDER GENERAL NOTES:

- Changed 1st note *From*: Geotextile filter Type IIV per spec 2511. Geotextile filter Type IIV by the sq. yd. *To*: Geotextile filter Type 7 per spec 3733, by the sq. yd.
- At Layout View, Changed note *From*: Passage Bench *To*: Passage Bench, if required (refer to section A-A)

Revised 11-06-2013
UNDER GENERAL NOTES:

- Removed 1st and 2nd notes pertaining to the special provisions.
- Changed the 3rd note to read: "Geotextile filter type VII per spec 2511, Geotextile filter type VII by the Sq. Yd."
- Changed the 4th note to read: "Riprap per spec 2511, random riprap class ___ by the Cu. Yd."

Approved, and signed, May 24, 2011
NEW STANDARD

Figure 5-397.402
Conduit System For _____

Approved, and signed, September 26, 2003. Last date revised: May 24, 2012.

Revised 05-24-2012
At the Transverse Section, Centering Device Detail –Side View, Hanger Assembly and Junction Box Details: added numbered note "②" to all locations that reference the Concrete Inserts.

Under GENERAL NOTES: Changed all instances of Mn/DOT SPEC. *to* SPEC.

Revised 02-23-2011
At CONDUIT HANGER DETAIL: Replaced the single nut with a "Double Nut" to the bolt and the threaded hanger rod. Also added - See Detail "A"

Added: DETAIL "A" to the sheet showing a larger detail of the "Double Nut" connections.

Under GENERAL NOTES: Added numbered note: ④ DOUBLE NUTS OR JAM NUTS OR LOCK NUT.

Revised 03-02-2005
At CENTER DEVICE DETAIL – SIDE VIEW: changed BOTTOM OF SLAB *to* BOTTOM OF DECK

At LONGITUDINAL SECTION: changed drawing of curved rod anchorage at expansion device *to* bar-rods.

Approved, and signed, September 26, 2003.

Figure 5-397.406(A)
Conduit System (Lighting) Type F Concrete Barrier Blister, With or Without Wearing Course

Approved and signed, August 24, 2016.

Approved 08-24-2016
GENERAL: Throughout the Standard:

- Sheet number changed from 5-397.406 to 5-397.406(A) to accommodate the addition of a Type S Barrier (Fig. 5-397.406(B)).
- The size of the blister was increased slightly to accommodate the new anchorage assembly as detailed on B950.
- The "SUMMARY OF QUANTITIES" table was eliminated per recent MnDOT policy.
- Updated conduit to use PVC coated RSC.

At PLAN VIEW – LIGHT POLE ANCHORAGE ON TYPE F BARRIER:
Increased the size of the blister & modified associated dimensions
Added bar L508E
Increased horizontal leg of bar L507E
Added control joints at each end of blister.

At SECTION B-B:
Increased the size of the blister & modified associated dimensions.

At ISOMETRIC VIEW:
Added control joints at each end of blister.
Added ground rod and note ⑥ in hand hole.

At GENERAL NOTES:
Changed note from "All material listed above is included in price bid for "Conduit System (Lighting)"" to "Anchor Bolt Cluster is included in price bid for "Conduit System"".
Changed note ① from "The 1-1/2" dia. conduit shall extend 3" above the railing and be capped" to "Extend the 1-1/2" dia. PVC coated rigid steel conduit 3" above the barrier and install cap."
Added 2nd sentence to note ② – "Weight of reinforcement is included in price bid for "Reinforcement Bars (Epoxy Coated)"."
Eliminated note ③. Changed note ④ to note ③.
Added new notes ④, ⑤, and ⑥.

At DESIGNER NOTE:
Added "Per note ②, be sure to add the weight of additional rebar to the reinforcement quantity."

At SECTION A-A:
Changed dimensions, reinforcement, notes, etc. to match plan view.
Corrected callouts for bars L503E, L504E, and L505E.

At CONDUIT PLACMENT DETAIL:
Changed dimensions to match detail B950.

At COMBINATION DEFLECTION/EXPANSION FITTING:
Updated notes.

At BILL OF REINFORCEMENT and REINFORCMENT BAR LAYOUTS:
Updated bar lengths. Added bar lengths for bridges with and without a wearing course.

Added bar L508E.

Revised 04-17-2013
This standard was updated to convert reinforcing bar marks from metric to U.S. customary bar designations.

Approved, and signed, May 24, 2011
NEW STANDARD

Figure 5-397.406(B)
Conduit System (Lighting) 36” Type S Concrete Barrier Blister, With or Without Wearing Course

Approved, and signed, August 24, 2016.

Approved, and signed, August 24, 2016
NEW STANDARD

Figure 5-397.504
27" Prestressed Concrete Beam (Pretensioned) 27M-___

Approved, and signed, October 22, 2008. Last date revised: December 2, 2015

Revised 12-02-2015

At END VIEW:

- Changed the note under the END VIEW title to read: Cut strands flush with concrete. Cover ends with sealant per approved products list "Bridge-Prestressed Beams-Cut Strand Sealant."
- Slightly adjusted the location of the draped strands to show top strands 3" down from the top of the beam.
- Changed the G403E bar to G303E and the G507E to G307E.

At BEAM ELEVATION:

- Break lines, a designer note and additional reinforcement spacing dimensions were added to better clarify the G507E (now G307E) confinement bar.
- The term "Bursting" was changed to "Splitting" in the designer note at the beam end.
- Changed the G403E bar to G303E and the G507E to G307E.

At SECTION AT CL SPAN:

- Changed the note on the right side of the web from "1¼" CLR. (TYP.)" to "1¼" CLR."
- Added note "1 1/8" CLR. and circled note 11 at the lower left corner.
- Changed bar G403E to G303E.

At Y DISTANCES Table:

- Added circled note 5.

At CAMBER DIAGRAM:

- Changed the notes under the CAMBER DIAGRAM title. The 1ST note: "Erection camber shown is after diaphragms are in place" was removed since 27M beams don't use diaphragms.

At CONCRETE END DIAGHRAGM:

- Added Designer Note: "Min. Distance between threaded insert and end of beam is 3"".

At PRESTRESSING STRAND DIAMETER Table:

- Removed the table and changed the Designer Note from "Place an "X" in the appropriate box to indicate the strand diameter used for the design. Round concrete strength to one tenth KSI." to "Indicate min. required concrete strength, round concrete strength to one tenth KSI."

At GENERAL NOTES:

- Removed the note "Approximate weight of beam is __ tons."
- Changed circled note 5 from "Use 7-wire low relaxation prestressing strand, conforming to ASTM A416, grade 270." to "Use 0.6" dia. 7-wire low relaxation prestressing strand, conforming to ASTM A416, grade 270."
- Added circled note 11 "Typ. Clr. for entire bottom flange."

At Bar Details:

- Changed G403E to G303E and G507E to G307E.

Re-Approved 01-13-2015

At the Y DISTANCES TABLE:

- Changed note from "(IN INCHES)" to "(INCHES)" to the end of the table title.

At CAMBER DIAGRAM:

- Changed the "Initial Total Camber" *to* "Erection Camber" in the detail.
- Changed the 1st Camber Diagram note to read: "Erection camber given is after diaphragms are in place."
- Within the 2nd Camber Diagram note, changed the word "Railing" to "Barrier"
- Changed the 3rd Camber Diagram note to read: "Contractor will take elevations at top of beams after erection and will allow for deflection shown to enable building forms to correct grade and specified slab thickness. Provide copy of elevations to the engineer"

At GENERAL NOTES:

- Removed the 1st note: "Tops of beams shall be rough floated and broomed transversely for bond."
- Changed the 3rd note to read: Mark each beam showing bridge number, casting date, and individual identification letters and numbers on the face of the beam, near the end, so located that they will be exposed after the end diaphragms have been cast. Mark fascia beams on the inside face. Ensure all markings are stencilled and clearly legible. For location of beams, see framing plan.
- In the 4th note: Changed the word "shall" to "is" and removed the "Mn/DOT" reference.
- Added Note: "Apply an approved sealer to the sides of the beam near each end per the special provisions."
- Changed numbered note ⑤ to read: Use 7-wire low relaxation prestressing strand, conforming to ASTM A416, grade 270.
- Added to the end of numbered note ⑥: Beams detailed to include a tapered plate per standard figure B309 must include sole plate.
- Added numbered note ⑧: Two inside bars may be placed adjacent to vertical stirrup for tying convenience.
- Added numbered note ⑨: Steel trowel to smooth finish and apply bond breaker per approved products list.
- Added numbered note ⑩: Rough float and broom transversely for bond per spec. 2405.3.D.

At END VIEW:
- Added ¾" to the Chamfer at the bottom flange.
- Added numbered note ⑧ to the dimension for the G806E bar spacing.
- Changed the subtitle to read: Cut strands flush with concrete. Cover ends with one component polyurethane sealant per approved product list.

At BEAM ELEVATION:
- Changed the look of the sole plate to match the updated B303 detail.
- Added clearance dimension "G505E 2" CLR." in the top flange at the beam end.

At SECTION AT ℄ SPAN:
- Added dimension lines and numbered notes at the top flange location for smooth or rough finish guidance.

At DETAIL "A":
- Changed threaded rod note to read "3/4" dia. x 2'-0" rod 2" threaded. See spec. 2405.3.K for coating requirements"

Revised 04-17-2013
This standard was updated to convert reinforcing bar marks from metric to U.S. customary bar designations.

Revised 10-22-2009
Added "ROUND CONCRETE STRENGTH TO ONE TENTH KSI." to the designer note under the Minimum Concrete Strength Table.

At MINIMUM CONCRETE STRENGTH TABLE:
- Changed wording in the table title: from "P.S.I." to "K.S.I."
- Added KSI to the table that lists concrete strength.

At CALCULATED PRESTRESS LOSSES TABLE:
- Added "TOTAL LOSSES …..KSI" row to the table.

At SECTION AT CENTERLINE SPAN:
- Added bar designation "G1001E" to the top tie bar.

At DETAIL "A":
- Changed note to read "3/4" DIA. x 2'-0" ROD 2" THREADED. SEE SPECIAL PROVISIONS FOR COATING REQUIREMENTS"

At CONCRETE END DIAPHRAGM:

- Changed sub-title from "INTEGRAL ABUTMENT (SEE B815 FOR DIAPHRAGM DETAILS)" to "SEE SUPERSTRUCTURE DETAILS AND REINFORCEMENT FOR DIAPHRAGM DETAILS"

Revised 04-22-2009

ADDED: "CALCULATED PRESTRESS LOSSES" box to the sheet.

REVISED: The input data fields to show dashed lines to indicate where designer needs to input information.

At CONCRETE END DIAPHRAGM:

- Changed the sub-title to read: "INTEGRAL ABUTMENT (SEE B815 FOR DIAPHRAGM DETAILS)"

Re-Approved 10-22-2008

CHANGED: "CONTRACTOR SHALL PROVIDE TEMPORARY BRACING" block to "CONTRACTOR SHALL VERIFY STABILITY OF FASCIA BEAMS FROM OVERTURNING (NO PERMANENT BEAM DIAPHRAGMS ARE PRESENT). CONTRACTOR SHALL PROVIDE TEMPORARY BRACING."

ADDED: "OVERHANG SUPPORT CONCEPT SKETCH" detail with note referencing the "Construction Notes" on the front portion of the bridge plans.

ADDED: Designer note as reminder to include 27M temporary bracing note to the "Construction Notes" on the front portion of the plans.

Re-Approved 10-26-2005

Specified certain notes as "designer notes", which are to be removed prior to plotting final plan

At BEAM ELEVATION:

- Clarified 2-G1303E & G1607E spacing at end of beam
- Changed HOLD DOWN POINT *to* HOLD DOWN POINT ⑦

At G1303E bar bend: Changed $11^1/_2$" dimension *to* $12^1/_2$"

Under GENERAL NOTES: Added ⑦ CENTER OF GRAVITY OF HOLD DOWNS WHEN MULTIPLE HOLD DOWNS ARE USED.

Revised 03-31-2005

Under GENERAL NOTES: changed note ⑥ *from* FOR INTEGRAL ABUTMENT. SOLE PLATE CAN BE ELIMINATED OR BE REPLACED WITH APPROVED PROTECTION PLATE. *to* FOR INTEGRAL ABUTMENT, SOLE PLATE CAN BE ELIMINATED OR REPLACED WITH AN APPROVED PROTECTION PLATE.

Approved, and signed, April 29, 2003.

Figure 5-397.505
36" Prestressed Concrete Beam (Pretensioned) 36M-___

Approved, and signed, October 26, 2005. Last date revised: December 2, 2015

Revised 12-02-2015

At END VIEW:

- Changed the note under the END VIEW title to read: Cut strands flush with concrete. Cover ends with sealant per approved products list "Bridge-Prestressed Beams-Cut Strand Sealant."
- Slightly adjusted the location of the draped strands to show top strands 3" down from the top of the beam.
- Changed the G403E bar to G303E and the G507E to G307E.

At BEAM ELEVATION:

- Break lines, a designer note and additional reinforcement spacing dimensions were added to better clarify the G507E (now G307E) confinement bar.
- The term "Bursting" was changed to "Splitting" in the designer note at the beam end.
- Changed the G403E bar to G303E and the G507E to G307E.

At SECTION AT CL SPAN:

- Changed the note on the right side of the web from "1¼" CLR. (TYP.)" to "1¼" CLR."
- Added note "1 1/8" CLR. and circled note 11 at the lower left corner.
- Changed bar G403E to G303E.

At Y DISTANCES Table:

- Added circled note 5.

At CONCRETE END DIAGHRAGM:

- Added Designer Note: "Min. Distance between threaded insert and end of beam is 3"".

At PRESTRESSING STRAND DIAMETER Table:

- Removed the table and changed the Designer Note from "Place an "X" in the appropriate box to indicate the strand diameter used for the design. Round concrete strength to one tenth KSI." to "Indicate min. required concrete strength, round concrete strength to one tenth KSI."

At GENERAL NOTES:

- Removed the note "Approximate weight of beam is __ tons."
- Changed circled note 5 from "Use 7-wire low relaxation prestressing strand, conforming to ASTM A416, grade 270." to "Use 0.6" dia. 7-wire low relaxation prestressing strand, conforming to ASTM A416, grade 270."
- Added circled note 11 "Typ. Clr. for entire bottom flange."

At Bar Details:

- Changed G403E to G303E and G507E to G307E.

Re-Approved 01-13-2015

At the Y DISTANCES TABLE:

- Changed note from "(IN INCHES)" to "(INCHES)" to the end of the table title.

At CAMBER DIAGRAM:

- Changed the "Initial Total Camber" *to* "Erection Camber" in the detail.
- Changed the 1st Camber Diagram note to read: "Erection camber given is after diaphragms are in place."
- Within the 2nd Camber Diagram note, changed the word "Railing" to "Barrier"
- Changed the 3rd Camber Diagram note to read: "Contractor will take elevations at top of beams after erection and will allow for deflection shown to enable building forms to correct grade and specified slab thickness. Provide copy of elevations to the engineer"

At GENERAL NOTES:

- Removed the 1st note: "Tops of beams shall be rough floated and broomed transversely for bond."
- Changed the 3rd note to read: Mark each beam showing bridge number, casting date, and individual identification letters and numbers on the face of the beam, near the end, so located that they will be exposed

after the end diaphragms have been cast. Mark fascia beams on the inside face. Ensure all markings are stencilled and clearly legible. For location of beams, see framing plan.

- In the 4th note: Changed the word "shall" to "is" and removed the "Mn/DOT" reference.
- Added Note: "Apply an approved sealer to the sides of the beam near each end per the special provisions."
- Changed numbered note ⑤ to read: Use 7-wire low relaxation prestressing strand, conforming to ASTM A416, grade 270.
- Added to the end of numbered note ⑥: Beams detailed to include a tapered plate per standard figure B309 must include sole plate.
- Added numbered note ⑧: Two inside bars may be placed adjacent to vertical stirrup for tying convenience.
- Added numbered note ⑨: Steel trowel to smooth finish and apply bond breaker per approved products list.
- Added numbered note ⑩: Rough float and broom transversely for bond per spec. 2405.3.D.

At END VIEW:

- Added ¾" to the Chamfer at the bottom flange.
- Added numbered note ⑧ to the dimension for the G806E bar spacing.
- Changed the subtitle to read: Cut strands flush with concrete. Cover ends with one component polyurethane sealant per approved product list.

At BEAM ELEVATION:

- Changed the look of the sole plate to match the updated B303 detail.
- Added clearance dimension "G505E 2" CLR." in the top flange at the beam end.

At SECTION AT ℄ SPAN:

- Added dimension lines and numbered notes at the top flange location for smooth or rough finish guidance.

At DETAIL "A":

- Changed threaded rod note to read "3/4" dia. x 2'-0" rod 2" threaded. See spec. 2405.3.K for coating requirements"

Revised 04-17-2013

This standard was updated to convert reinforcing bar marks from metric to U.S. customary bar designations.

Revised 10-22-2009

Added "ROUND CONCRETE STRENGTH TO ONE TENTH KSI." to the designer note under the Minimum Concrete Strength Table.

At MINIMUM CONCRETE STRENGTH TABLE:

- Changed wording in the table title: from "P.S.I." to "K.S.I."
- Added KSI to the table that lists concrete strength.

At CALCULATED PRESTRESS LOSSES TABLE:

- Added "TOTAL LOSSES …..KSI" row to the table.

At SECTION AT CENTERLINE SPAN:

- Added bar designation "G1001E" to the top tie bar.

At DETAIL "A":

- Changed note to read "3/4" DIA. x 2'-0" ROD 2" THREADED. SEE SPECIAL PROVISIONS FOR COATING REQUIREMENTS"

At CONCRETE END DIAPHRAGM:

- Changed sub-title from "INTEGRAL ABUTMENT (SEE B815 FOR DIAPHRAGM DETAILS)" to "SEE SUPERSTRUCTURE DETAILS AND REINFORCEMENT FOR DIAPHRAGM DETAILS"

Revised 04-22-2009

ADDED: "CALCULATED PRESTRESS LOSSES" box to the sheet.

REVISED: The input data fields to show dashed lines to indicate where designer needs to input information.

At CONCRETE END DIAPHRAGM:

- Changed the sub-title to read: "INTEGRAL ABUTMENT (SEE B815 FOR DIAPHRAGM DETAILS)"

Re-Approved 10-26-2005
Specified certain notes as "designer notes", which are to be removed prior to plotting final plan

At BEAM ELEVATION:
- Clarified 2-G1303E & G1607E spacing at end of beam
- Changed HOLD DOWN POINT *to* HOLD DOWN POINT ⑦

At G1303E bar bend: Changed $11^1/_2$" dimension *to* $12^1/_2$"

Under GENERAL NOTES: Added ⑦ CENTER OF GRAVITY OF HOLD DOWNS WHEN MULTIPLE HOLD DOWNS ARE USED.

Revised 03-31-2005
Under GENERAL NOTES: changed note ⑥ *from* FOR INTEGRAL ABUTMENT. SOLE PLATE CAN BE ELIMINATED OR BE REPLACED WITH APPROVED PROTECTED PLATE. *to* FOR INTEGRAL ABUTMENT, SOLE PLATE CAN BE ELIMINATED OR REPLACED WITH AN APPROVED PROTECTION PLATE.

Approved, and signed, April 29, 2003.

Figure 5-397.507
MN45" Prestressed Concrete Beam (Pretensioned) MN45-___

Approved, and signed, October 26, 2005. Last date revised: December 2, 2015

Revised 12-02-2015

At END VIEW:

- Changed the note under the END VIEW title to read: Cut strands flush with concrete. Cover ends with sealant per approved products list "Bridge-Prestressed Beams-Cut Strand Sealant."
- Slightly adjusted the location of the draped strands to show top strands 3” down from the top of the beam.
- Changed the G403E bar to G303E and the G507E to G307E.

At BEAM ELEVATION:

- Break lines, a designer note and additional reinforcement spacing dimensions were added to better clarify the G507E (now G307E) confinement bar.
- The note for the “Optional: 3” Max. Dia. Sleeve for hauling…” has been changed to circled note ⑫ and the note has moved under the General Notes.
- The term “Bursting” was changed to “Splitting” in the designer note at the beam end.
- Bars G608E and G609E have been added to the alternate spacing dimension near the end of the beam.
- A 3” dimension was added near the end of the beam to clarify the starting location for 2- G608E bars.
- Changed the G403E bar to G303E and the G507E to G307E.

At SECTION AT CL SPAN:

- Changed the note on the right side of the web from "1¼" CLR. (TYP.)" to "1¼" CLR."
- Added note "1 1/8" CLR. and circled note 13 at the lower left corner.
- Changed bar G403E to G303E.

At Y DISTANCES Table:

- Added circled note 5.

At CONCRETE END DIAPHRAGMS and STEEL INTERMEDIATE DIAPHRAGM:

- Changed the look of the elevation views to better represent the actual beam flanges and web.
- Added Designer Note: "Min. Distance between threaded insert and end of beam is 3"".

At PRESTRESSING STRAND DIAMETER Table:

- Removed the table and changed the Designer Note from "Place an "X" in the appropriate box to indicate the strand diameter used for the design. Round concrete strength to one tenth KSI." to "Indicate min. required concrete strength, round concrete strength to one tenth KSI."

At GENERAL NOTES:

- Removed the note "Approximate weight of beam is __ tons."
- Changed circled note 5 from "Use 7-wire low relaxation prestressing strand, conforming to ASTM A416, grade 270." to "Use 0.6" dia. 7-wire low relaxation prestressing strand, conforming to ASTM A416, grade 270."
- Added circled note 12 "Optional: 3” Max. Dia. Sleeve for hauling…"
- Added circled note 13 "Typ. Clr. for entire bottom flange."

At Bar Details:

- Changed G403E to G303E and G507E to G307E.

Re-Approved 01-13-2015

At the Y DISTANCES TABLE:

- A Changed note from “(IN INCHES)” to “(INCHES)” to the end of the table title.

At CAMBER DIAGRAM:

- Changed the “Initial Total Camber” *to* “Erection Camber” in the detail.
- Changed the 1st Camber Diagram note to read: “Erection camber given is after diaphragms are in place.”
- Within the 2nd Camber Diagram note, changed the word “Railing” to “Barrier”

- Changed the 3rd Camber Diagram note to read: "Contractor will take elevations at top of beams after erection and will allow for deflection shown to enable building forms to correct grade and specified slab thickness. Provide copy of elevations to the engineer"

At GENERAL NOTES:

- Removed the 1st note: "Tops of beams shall be rough floated and broomed transversely for bond."
- Changed the 3rd note to read: Mark each beam showing bridge number, casting date, and individual identification letters and numbers on the face of the beam, near the end, so located that they will be exposed after the end diaphragms have been cast. Mark fascia beams on the inside face. Ensure all markings are stencilled and clearly legible. For location of beams, see framing plan.
- In the 4th note: Changed the word "shall" to "is" and removed the "Mn/DOT" reference.
- Added Note: "Apply an approved sealer to the sides of the beam near each end per the special provisions."
- Changed numbered note ⑤ to read: Use 7-wire low relaxation prestressing strand, conforming to ASTM A416, grade 270.
- Added to the end of numbered note ⑥: Beams detailed to include a tapered plate per standard figure B309 must include sole plate.
- Added numbered note ⑧: Dimensions determined by contractor. Maintain 2" minimum clear from strands.
- Added numbered note ⑨: Two inside bars may be placed adjacent to vertical stirrup for tying convenience.
- Added numbered note ⑩: Steel trowel to smooth finish and apply bond breaker per approved products list.
- Added numbered note ⑪: Rough float and broom transversely for bond per spec. 2405.3.D.

REINFORCEMENT CHANGE:

- Increased bar sizes, G505E and G508E to G605E and G608E throughout the standard. Also added bar G609E to the bar bend details and the beam end at the "Beam Elevation".

At END VIEW:

- Added numbered note ⑨ to the dimension for the G806E bar spacing.
- Added 1 ¼" clr. to the G605E bar designation.
- Changed the subtitle to read: Cut strands flush with concrete. Cover ends with one component polyurethane sealant per approved product list. (G609E bar not shown)

At BEAM ELEVATION:

- Changed the bursting reinforcement spacing from 2 ½" to 3" in the designer note at the beam end.
- Changed the look of the sole plate to match the updated B303 detail.
- Added clearance dimension "G605E 2" CLR." in the top flange at the beam end.
- Added the Optional: 3" dia. sleeves for hauling the beam along with the accompanying dimensions and notes.
- Changed the web reinforcement at the beam end to an alternating sequence with the G608E and G609E bars. Also changed the accompanying notes.

At DETAIL "A":

- Changed threaded rod note to read "3/4" dia. x 2'-0" rod 2" threaded. See spec. 2405.3.K for coating requirements"

At SECTION AT ℄ SPAN:

- Added dimension lines and numbered notes at the top flange location for smooth or rough finish guidance.

Revised 04-17-2013

This standard was updated to convert reinforcing bar marks from metric to U.S. customary bar designations.

Revised 10-22-2009

Added "ROUND CONCRETE STRENGTH TO ONE TENTH KSI." to the designer note under the Minimum Concrete Strength Table.

At MINIMUM CONCRETE STRENGTH TABLE:

- Changed wording in the table title: from "P.S.I." to "K.S.I."

- Added KSI to the table that lists concrete strength.

At CALCULATED PRESTRESS LOSSES TABLE:

- Added "TOTAL LOSSES …..KSI" row to the table.

At SECTION AT CENTERLINE SPAN:

- Added bar designation "G1001E" to the top tie bar.

At DETAIL "A":

- Changed note to read "3/4" DIA. x 2'-0" ROD 2" THREADED. SEE SPECIAL PROVISIONS FOR COATING REQUIREMENTS"

At CONCRETE END DIAPHRAGM:

- Changed sub-title from "INTEGRAL ABUTMENT (SEE B815 FOR DIAPHRAGM DETAILS)" to "SEE SUPERSTRUCTURE DETAILS AND REINFORCEMENT FOR DIAPHRAGM DETAILS"

At BEAM ELEVATION:

- Added horizontal lines representing the top and bottom flanges.

Revised 04-22-2009

ADDED: "CALCULATED PRESTRESS LOSSES" box to the sheet.
REVISED: The input data fields to show dashed lines to indicate where designer needs to input information.

At CONCRETE END DIAPHRAGM:

- Changed the sub-title to read: "INTEGRAL ABUTMENT (SEE B815 FOR DIAPHRAGM DETAILS)"

Approved, and signed, October 26, 2005

NEW STANDARD

Figure 5-397.508
MN54" Prestressed Concrete Beam (Pretensioned) MN54-___

Approved, and signed, October 26, 2005. Last date revised: December 2, 2015

Revised 12-02-2015

At END VIEW:

- Changed the note under the END VIEW title to read: Cut strands flush with concrete. Cover ends with sealant per approved products list "Bridge-Prestressed Beams-Cut Strand Sealant."
- Slightly adjusted the location of the draped strands to show top strands 3” down from the top of the beam.
- Changed the G403E bar to G303E and the G507E to G307E.

At BEAM ELEVATION:

- Break lines, a designer note and additional reinforcement spacing dimensions were added to better clarify the G507E (now G307E) confinement bar.
- The note for the “Optional: 3” Max. Dia. Sleeve for hauling…” has been changed to circled note ⑫ and the note has moved under the General Notes.
- The term “Bursting” was changed to “Splitting” in the designer note at the beam end.
- Bars G608E and G609E have been added to the alternate spacing dimension near the end of the beam.
- A 3” dimension was added near the end of the beam to clarify the starting location for 2- G608E bars.
- Changed the G403E bar to G303E and the G507E to G307E.

At SECTION AT CL SPAN:

- Changed the note on the right side of the web from "1¼" CLR. (TYP.)" to "1¼" CLR."
- Added note "1 1/8" CLR. and circled note 13 at the lower left corner.
- Changed bar G403E to G303E.

At Y DISTANCES Table:

- Added circled note 5.

At CONCRETE END DIAPHRAGMS and STEEL INTERMEDIATE DIAPHRAGM:

- Changed the look of the elevation views to better represent the actual beam flanges and web.
- Added Designer Note: "Min. Distance between threaded insert and end of beam is 3"".

At PRESTRESSING STRAND DIAMETER Table:

- Removed the table and changed the Designer Note from "Place an "X" in the appropriate box to indicate the strand diameter used for the design. Round concrete strength to one tenth KSI." to "Indicate min. required concrete strength, round concrete strength to one tenth KSI."

At GENERAL NOTES:

- Removed the note "Approximate weight of beam is __ tons."
- Changed circled note 5 from "Use 7-wire low relaxation prestressing strand, conforming to ASTM A416, grade 270." to "Use 0.6" dia. 7-wire low relaxation prestressing strand, conforming to ASTM A416, grade 270."
- Added circled note 12 "Optional: 3” Max. Dia. Sleeve for hauling…"
- Added circled note 13 "Typ. Clr. for entire bottom flange."

At Bar Details:

- Changed G403E to G303E and G507E to G307E.

Re-Approved 01-13-2015

At the Y DISTANCES TABLE:

- Changed note from “(IN INCHES)” to “(INCHES)” to the end of the table title.

At CAMBER DIAGRAM:

- Changed the “Initial Total Camber” *to* “Erection Camber” in the detail.
- Changed the 1st Camber Diagram note to read: “Erection camber given is after diaphragms are in place.”
- Within the 2nd Camber Diagram note, changed the word “Railing” to “Barrier”

- Changed the 3rd Camber Diagram note to read: "Contractor will take elevations at top of beams after erection and will allow for deflection shown to enable building forms to correct grade and specified slab thickness. Provide copy of elevations to the engineer"

At GENERAL NOTES:

- Removed the 1st note: "Tops of beams shall be rough floated and broomed transversely for bond."
- Changed the 3rd note to read: Mark each beam showing bridge number, casting date, and individual identification letters and numbers on the face of the beam, near the end, so located that they will be exposed after the end diaphragms have been cast. Mark fascia beams on the inside face. Ensure all markings are stencilled and clearly legible. For location of beams, see framing plan.
- In the 4th note: Changed the word "shall" to "is" and removed the "Mn/DOT" reference.
- Added Note: "Apply an approved sealer to the sides of the beam near each end per the special provisions."
- Changed numbered note ⑤ to read: Use 7-wire low relaxation prestressing strand, conforming to ASTM A416, grade 270.
- Added to the end of numbered note ⑥: Beams detailed to include a tapered plate per standard figure B309 must include sole plate.
- Added numbered note ⑧: Dimensions determined by contractor. Maintain 2" minimum clear from strands.
- Added numbered note ⑨: Two inside bars may be placed adjacent to vertical stirrup for tying convenience.
- Added numbered note ⑩: Steel trowel to smooth finish and apply bond breaker per approved products list.
- Added numbered note ⑪: Rough float and broom transversely for bond per spec. 2405.3.D.

REINFORCEMENT CHANGE:

- Increased bar sizes, G505E and G508E to G605E and G608E throughout the standard. Also added bar G609E to the bar bend details and the beam end at the "Beam Elevation".

At END VIEW:

- Added numbered note ⑨ to the dimension for the G806E bar spacing.
- Added 1 ¼" clr. to the G605E bar designation.
- Changed the subtitle to read: Cut strands flush with concrete. Cover ends with one component polyurethane sealant per approved product list. (G609E bar not shown)

At BEAM ELEVATION:

- Changed the bursting reinforcement spacing from 2 ½" to 3" in the designer note at the beam end.
- Changed the look of the sole plate to match the updated B303 detail.
- Added clearance dimension "G605E 2" CLR." in the top flange at the beam end.
- Added the Optional: 3" dia. sleeves for hauling the beam along with the accompanying dimensions and notes.
- Changed the web reinforcement at the beam end to an alternating sequence with the G608E and G609E bars. Also changed the accompanying notes.

At DETAIL "A":

- Changed threaded rod note to read "3/4" dia. x 2'-0" rod 2" threaded. See spec. 2405.3.K for coating requirements"

At SECTION AT ℄ SPAN:

- Added dimension lines and numbered notes at the top flange location for smooth or rough finish guidance.

Revised 04-17-2013

This standard was updated to convert reinforcing bar marks from metric to U.S. customary bar designations.

Revised 10-22-2009

Added "ROUND CONCRETE STRENGTH TO ONE TENTH KSI." to the designer note under the Minimum Concrete Strength Table.

At MINIMUM CONCRETE STRENGTH TABLE:

- Changed wording in the table title: from "P.S.I." to "K.S.I."

- Added KSI to the table that lists concrete strength.

At CALCULATED PRESTRESS LOSSES TABLE:
- Added "TOTAL LOSSES …..KSI" row to the table.

At SECTION AT CENTERLINE SPAN:
- Added bar designation "G1001E" to the top tie bar.

At DETAIL "A":
- Changed note to read "3/4" DIA. x 2'-0" ROD 2" THREADED. SEE SPECIAL PROVISIONS FOR COATING REQUIREMENTS"

At CONCRETE END DIAPHRAGM:
- Changed sub-title from "INTEGRAL ABUTMENT (SEE B815 FOR DIAPHRAGM DETAILS)" to "SEE SUPERSTRUCTURE DETAILS AND REINFORCEMENT FOR DIAPHRAGM DETAILS"

At BEAM ELEVATION:
- Added horizontal lines representing the top and bottom flanges.

Revised 04-22-2009

ADDED: "CALCULATED PRESTRESS LOSSES" box to the sheet.

REVISED: The input data fields to show dashed lines to indicate where designer needs to input information.

At CONCRETE END DIAPHRAGM:
- Changed the sub-title to read: "INTEGRAL ABUTMENT (SEE B815 FOR DIAPHRAGM DETAILS)"

Approved, and signed, October 26, 2005
NEW STANDARD

Figure 5-397.509
MN63" Prestressed Concrete Beam (Pretensioned) MN63-___

Approved, and signed, June 14, 2006. Last date revised: December 2, 2015

Revised 12-02-2015

At END VIEW:

- Changed the note under the END VIEW title to read: Cut strands flush with concrete. Cover ends
- with sealant per approved products list "Bridge-Prestressed Beams-Cut Strand Sealant."
- Slightly adjusted the location of the draped strands to show top strands 3” down from the top of the beam.
- Changed the G403E bar to G303E and the G507E to G307E.

At BEAM ELEVATION:

- Break lines, a designer note and additional reinforcement spacing dimensions were added to better clarify the G507E (now G307E) confinement bar.
- The note for the “Optional: 3” Max. Dia. Sleeve for hauling…” has been changed to circled note ⑫ and the note has moved under the General Notes.
- The term “Bursting” was changed to “Splitting” in the designer note at the beam end.
- Bars G608E and G609E have been added to the alternate spacing dimension near the end of the beam.
- A 3” dimension was added near the end of the beam to clarify the starting location for 2- G608E bars.
- Changed the G403E bar to G303E and the G507E to G307E.

At SECTION AT CL SPAN:

- Changed the note on the right side of the web from "1¼" CLR. (TYP.)" to "1¼" CLR."
- Added note "1 1/8" CLR. and circled note 13 at the lower left corner.
- Changed bar G403E to G303E.

At Y DISTANCES Table:

- Added circled note 5.

At CONCRETE END DIAPHRAGMS and STEEL INTERMEDIATE DIAPHRAGM:

- Changed the look of the elevation views to better represent the actual beam flanges and web.
- Added Designer Note: "Min. Distance between threaded insert and end of beam is 3"".

At PRESTRESSING STRAND DIAMETER Table:

- Removed the table and changed the Designer Note from "Place an "X" in the appropriate box to indicate the strand diameter used for the design. Round concrete strength to one tenth KSI." to "Indicate min. required concrete strength, round concrete strength to one tenth KSI."

At GENERAL NOTES:

- Removed the note "Approximate weight of beam is __ tons."
- Changed circled note 5 from "Use 7-wire low relaxation prestressing strand, conforming to ASTM A416, grade 270." to "Use 0.6" dia. 7-wire low relaxation prestressing strand, conforming to ASTM A416, grade 270."
- Added circled note 12 "Optional: 3” Max. Dia. Sleeve for hauling…"
- Added circled note 13 "Typ. Clr. for entire bottom flange."

At Bar Details:

- Changed G403E to G303E and G507E to G307E.

Re-Approved 01-13-2015

At the Y DISTANCES TABLE:

- Changed note from “(IN INCHES)” to “(INCHES)” to the end of the table title.

At CAMBER DIAGRAM:

- Changed the “Initial Total Camber” *to* “Erection Camber” in the detail.
- Changed the 1st Camber Diagram note to read: “Erection camber given is after diaphragms are in place.”
- Within the 2nd Camber Diagram note, changed the word “Railing” to “Barrier”

- Changed the 3rd Camber Diagram note to read: "Contractor will take elevations at top of beams after erection and will allow for deflection shown to enable building forms to correct grade and specified slab thickness. Provide copy of elevations to the engineer"

At GENERAL NOTES:

- Removed the 1st note: "Tops of beams shall be rough floated and broomed transversely for bond."
- Changed the 3rd note to read: Mark each beam showing bridge number, casting date, and individual identification letters and numbers on the face of the beam, near the end, so located that they will be exposed after the end diaphragms have been cast. Mark fascia beams on the inside face. Ensure all markings are stencilled and clearly legible. For location of beams, see framing plan.
- In the 4th note: Changed the word "shall" to "is" and removed the "Mn/DOT" reference.
- Added Note: "Apply an approved sealer to the sides of the beam near each end per the special provisions."
- Changed numbered note ⑤ to read: Use 7-wire low relaxation prestressing strand, conforming to ASTM A416, grade 270.
- Added to the end of numbered note ⑥: Beams detailed to include a tapered plate per standard figure B309 must include sole plate.
- Added numbered note ⑧: Dimensions determined by contractor. Maintain 2" minimum clear from strands.
- Added numbered note ⑨: Two inside bars may be placed adjacent to vertical stirrup for tying convenience.
- Added numbered note ⑩: Steel trowel to smooth finish and apply bond breaker per approved products list.
- Added numbered note ⑪: Rough float and broom transversely for bond per spec. 2405.3.D.

REINFORCEMENT CHANGE:

- Increased bar sizes, G505E and G508E to G605E and G608E throughout the standard. Also added bar G609E to the bar bend details and the beam end at the "Beam Elevation".

At END VIEW:

- Added numbered note ⑨ to the dimension for the G806E bar spacing.
- Added 1 ¼" clr. to the G605E bar designation.
- Changed the subtitle to read: Cut strands flush with concrete. Cover ends with one component polyurethane sealant per approved product list. (G609E bar not shown)

At BEAM ELEVATION:

- Changed the bursting reinforcement spacing from 2 ½" to 3" in the designer note at the beam end.
- Changed the look of the sole plate to match the updated B303 detail.
- Added clearance dimension "G605E 2" CLR." in the top flange at the beam end.
- Added the Optional: 3" dia. sleeves for hauling the beam along with the accompanying dimensions and notes.
- Changed the web reinforcement at the beam end to an alternating sequence with the G608E and G609E bars. Also changed the accompanying notes.

At DETAIL "A":

- Changed threaded rod note to read "3/4" dia. x 2'-0" rod 2" threaded. See spec. 2405.3.K for coating requirements"

At SECTION AT ℄ SPAN:

- Added dimension lines and numbered notes at the top flange location for smooth or rough finish guidance.

Revised 04-17-2013

This standard was updated to convert reinforcing bar marks from metric to U.S. customary bar designations.

Revised 10-22-2009

Added "ROUND CONCRETE STRENGTH TO ONE TENTH KSI." to the designer note under the Minimum Concrete Strength Table.

At MINIMUM CONCRETE STRENGTH TABLE:

- Changed wording in the table title: from "P.S.I." to "K.S.I."

- Added KSI to the table that lists concrete strength.

At CALCULATED PRESTRESS LOSSES TABLE:
- Added "TOTAL LOSSES …..KSI" row to the table.

At SECTION AT CENTERLINE SPAN:
- Added bar designation "G1001E" to the top tie bar.

At DETAIL "A":
- Changed note to read "3/4" DIA. x 2'-0" ROD 2" THREADED. SEE SPECIAL PROVISIONS FOR COATING REQUIREMENTS"

At CONCRETE END DIAPHRAGM:
- Changed sub-title from "INTEGRAL ABUTMENT (SEE B813 OR B815 FOR DIAPHRAGM DETAILS)" to "SEE SUPERSTRUCTURE DETAILS AND REINFORCEMENT FOR DIAPHRAGM DETAILS"

At BEAM ELEVATION:
- Added horizontal lines representing the top and bottom flanges.

Revised 04-22-2009

ADDED: "CALCULATED PRESTRESS LOSSES" box to the sheet.

REVISED: The input data fields to show dashed lines to indicate where designer needs to input information.

At CONCRETE END DIAPHRAGM:
- Changed the sub-title to read: "INTEGRAL ABUTMENT (SEE B813 OR B815 FOR DIAPHRAGM DETAILS)"

Approved, and signed, June 14, 2006
NEW STANDARD

Figure 5-397.514
45" Prestressed Concrete Beam (Pretensioned) 45M-___

Approved, and signed, October 26, 2005. Last date revised: 05-24-2011.

05-24-2011 - **ARCHIVED**
Due to the overlap with the MN shape, the 45M is no longer needed. The Standard figure 5-397.514 was removed from the server and Web site and was placed in an archive file.

Revised 10-22-2009
Added "ROUND CONCRETE STRENGTH TO ONE TENTH KSI." to the designer note under the Minimum Concrete Strength Table.

At MINIMUM CONCRETE STRENGTH TABLE:
- Changed wording in the table title: from "P.S.I." to "K.S.I."
- Added KSI to the table that lists concrete strength.

At CALCULATED PRESTRESS LOSSES TABLE:
- Added "TOTAL LOSSES …..KSI" row to the table.

At SECTION AT CENTERLINE SPAN:
- Added bar designation "G1001E" to the top tie bar.

At DETAIL "A":
- Changed note to read "3/4" DIA. x 2'-0" ROD 2" THREADED. SEE SPECIAL PROVISIONS FOR COATING REQUIREMENTS"

At CONCRETE END DIAPHRAGM:
- Changed sub-title from "INTEGRAL ABUTMENT (SEE B815 FOR DIAPHRAGM DETAILS)" to "SEE SUPERSTRUCTURE DETAILS AND REINFORCEMENT FOR DIAPHRAGM DETAILS"

Revised 04-22-2009
ADDED: "CALCULATED PRESTRESS LOSSES" box to the sheet.

REVISED: The input data fields to show dashed lines to indicate where designer needs to input information.

At CONCRETE END DIAPHRAGM:
- Changed the sub-title to read: "INTEGRAL ABUTMENT (SEE B815 FOR DIAPHRAGM DETAILS)"

Re-Approved 10-26-2005
Specified certain notes as "designer notes", which are to be removed prior to plotting final plan

At BEAM ELEVATION:
- Clarified 2-G1303E & G1607E spacing at end of beam
- Changed HOLD DOWN POINT *to* HOLD DOWN POINT ⑦

At G1303E bar bend: Changed $11^1/_2$" dimension *to* $12^1/_2$"

Under GENERAL NOTES: Added ⑦ CENTER OF GRAVITY OF HOLD DOWNS WHEN MULTIPLE HOLD DOWNS ARE USED.

Revised 03-31-2005
Under GENERAL NOTES: changed note ⑥ *from* FOR INTEGRAL ABUTMENT. SOLE PLATE CAN BE ELIMINATED OR BE REPLACED WITH APPROVED PROTECTED PLATE. *to* FOR INTEGRAL ABUTMENT, SOLE PLATE CAN BE ELIMINATED OR REPLACED WITH AN APPROVED PROTECTION PLATE.

Approved, and signed, April 29, 2003.

Figure 5-397.515
54" Prestressed Concrete Beam (Pretensioned) 54M-___

Approved, and signed, October 26, 2005. Last date revised: 05-24-2011.

05-24-2011 - **ARCHIVED**
Due to the overlap with the MN shape, the 54M is no longer needed. The Standard figure 5-397.515 was removed from the server and Web site and was placed in an archive file.

Revised 10-22-2009
Added "ROUND CONCRETE STRENGTH TO ONE TENTH KSI." to the designer note under the Minimum Concrete Strength Table.

At MINIMUM CONCRETE STRENGTH TABLE:
- Changed wording in the table title: from "P.S.I." to "K.S.I."
- Added KSI to the table that lists concrete strength.

At CALCULATED PRESTRESS LOSSES TABLE:
- Added "TOTAL LOSSES …..KSI" row to the table.

At SECTION AT CENTERLINE SPAN:
- Added bar designation "G1001E" to the top tie bar.

At DETAIL "A":
- Changed note to read "3/4" DIA. x 2'-0" ROD 2" THREADED. SEE SPECIAL PROVISIONS FOR COATING REQUIREMENTS"

At CONCRETE END DIAPHRAGM:
- Changed sub-title from "INTEGRAL ABUTMENT (SEE B815 FOR DIAPHRAGM DETAILS)" to "SEE SUPERSTRUCTURE DETAILS AND REINFORCEMENT FOR DIAPHRAGM DETAILS"

Revised 04-22-2009
ADDED: "CALCULATED PRESTRESS LOSSES" box to the sheet.

REVISED: The input data fields to show dashed lines to indicate where designer needs to input information.

At CONCRETE END DIAPHRAGM:
- Changed the sub-title to read: "INTEGRAL ABUTMENT (SEE B815 FOR DIAPHRAGM DETAILS)"

Re-Approved 10-26-2005
Specified certain notes as "designer notes", which are to be removed prior to plotting final plan

At BEAM ELEVATION:
- Clarified 2-G1303E & G1607E spacing at end of beam
- Changed HOLD DOWN POINT *to* HOLD DOWN POINT ⑦

At G1303E bar bend: Changed $11^1/_2$" dimension *to* $12^1/_2$"

Under GENERAL NOTES: Added ⑦ CENTER OF GRAVITY OF HOLD DOWNS WHEN MULTIPLE HOLD DOWNS ARE USED.

Revised 03-31-2005
Under GENERAL NOTES: changed note ⑥ *from* FOR INTEGRAL ABUTMENT. SOLE PLATE CAN BE ELIMINATED OR BE REPLACED WITH APPROVED PROTECTION PLATE. *to* FOR INTEGRAL ABUTMENT, SOLE PLATE CAN BE ELIMINATED OR REPLACED WITH AN APPROVED PROTECTION PLATE.

Approved, and signed, April 29, 2003.

Figure 5-397.516
63" Prestressed Concrete Beam (Pretensioned) 63M-___

Approved, and signed, October 26, 2005. Last date revised: 05-24-2011.

05-24-2011 - **ARCHIVED**
Due to the overlap with the MN shape, the 63M is no longer needed. The Standard figure 5-397.516 was removed from the server and Web site and was placed in an archive file.

Revised 10-22-2009
Added "ROUND CONCRETE STRENGTH TO ONE TENTH KSI." to the designer note under the Minimum Concrete Strength Table.

At MINIMUM CONCRETE STRENGTH TABLE:
- Changed wording in the table title: from "P.S.I." to "K.S.I."
- Added KSI to the table that lists concrete strength.

At CALCULATED PRESTRESS LOSSES TABLE:
- Added "TOTAL LOSSES …..KSI" row to the table.

At SECTION AT CENTERLINE SPAN:
- Added bar designation "G1001E" to the top tie bar.

At DETAIL "A":
- Changed note to read "3/4" DIA. x 2'-0" ROD 2" THREADED. SEE SPECIAL PROVISIONS FOR COATING REQUIREMENTS"

At CONCRETE END DIAPHRAGM:
- Changed sub-title from "INTEGRAL ABUTMENT (SEE B813 FOR DIAPHRAGM DETAILS)" to "SEE SUPERSTRUCTURE DETAILS AND REINFORCEMENT FOR DIAPHRAGM DETAILS"

Revised 04-22-2009
ADDED: "CALCULATED PRESTRESS LOSSES" box to the sheet.

REVISED: The input data fields to show dashed lines to indicate where designer needs to input information.

At CONCRETE END DIAPHRAGM:
- Changed the sub-title to read: "INTEGRAL ABUTMENT (SEE B813 FOR DIAPHRAGM DETAILS)"

Re-Approved 10-26-2005
Specified certain notes as "designer notes", which are to be removed prior to plotting final plan

At BEAM ELEVATION:
- Clarified 2-G1303E & G1607E spacing at end of beam
- Changed HOLD DOWN POINT *to* HOLD DOWN POINT ⑦

At G1303E bar bend: Changed $11^1/_2$" dimension *to* $12^1/_2$"

Under GENERAL NOTES: Added ⑦ CENTER OF GRAVITY OF HOLD DOWNS WHEN MULTIPLE HOLD DOWNS ARE USED.

Revised 03-31-2005
Under GENERAL NOTES: changed note ⑥ *from* FOR INTEGRAL ABUTMENT. SOLE PLATE CAN BE ELIMINATED OR BE REPLACED WITH APPROVED PROTECTED PLATE. *to* FOR INTEGRAL ABUTMENT, SOLE PLATE CAN BE ELIMINATED OR REPLACED WITH AN APPROVED PROTECTION PLATE.

Approved, and signed, April 29, 2003.

Figure 5-397.517
72" Prestressed Concrete Beam (Pretensioned) 72M-___

Approved, and signed, October 26, 2005. Last date revised: 05-24-2011.

05-24-2011 - **ARCHIVED**
Due to the overlap with the MN shape, the 72M is no longer needed. The Standard figure 5-397.517 was removed from the server and Web site and was placed in an archive file.

Revised 10-22-2009
Added "ROUND CONCRETE STRENGTH TO ONE TENTH KSI." to the designer note under the Minimum Concrete Strength Table.

At MINIMUM CONCRETE STRENGTH TABLE:
- Changed wording in the table title: from "P.S.I." to "K.S.I."
- Added KSI to the table that lists concrete strength.

At CALCULATED PRESTRESS LOSSES TABLE:
- Added "TOTAL LOSSES …..KSI" row to the table.

At SECTION AT CENTERLINE SPAN:
- Added bar designation "G1001E" to the top tie bar.

At DETAIL "A":
- Changed note to read "3/4" DIA. x 2'-0" ROD 2" THREADED. SEE SPECIAL PROVISIONS FOR COATING REQUIREMENTS"

At CONCRETE END DIAPHRAGM:
- Changed sub-title from "INTEGRAL ABUTMENT (SEE B813 FOR DIAPHRAGM DETAILS)" to "SEE SUPERSTRUCTURE DETAILS AND REINFORCEMENT FOR DIAPHRAGM DETAILS"

Revised 04-22-2009
ADDED: "CALCULATED PRESTRESS LOSSES" box to the sheet.

REVISED: The input data fields to show dashed lines to indicate where designer needs to input information.

At CONCRETE END DIAPHRAGM:
- Changed the sub-title to read: "INTEGRAL ABUTMENT (SEE B813 FOR DIAPHRAGM DETAILS)"

Re-Approved 10-26-2005
Specified certain notes as "designer notes", which are to be removed prior to plotting final plan

At BEAM ELEVATION:
- Clarified 2-G1303E & G1607E spacing at end of beam
- Changed HOLD DOWN POINT *to* HOLD DOWN POINT ⑦

At G1303E bar bend: Changed $11^1/_2$" dimension *to* $12^1/_2$"

Under GENERAL NOTES: Added ⑦ CENTER OF GRAVITY OF HOLD DOWNS WHEN MULTIPLE HOLD DOWNS ARE USED.

Revised 03-31-2005
Under GENERAL NOTES: changed note ⑥ *from* FOR INTEGRAL ABUTMENT. SOLE PLATE CAN BE ELIMINATED OR BE REPLACED WITH APPROVED PROTECTED PLATE. *to* FOR INTEGRAL ABUTMENT, SOLE PLATE CAN BE ELIMINATED OR REPLACED WITH AN APPROVED PROTECTION PLATE.

Approved, and signed, April 29, 2003.

Figure 5-397.518
81" Prestressed Concrete Beam (Pretensioned) 81M-___

Approved, and signed, October 26, 2005. Last date revised: 05-24-2011.

05-24-2011 - **ARCHIVED**
Due to the overlap with the MN and MW shapes, the 81M is no longer needed. The Standard figure 5-397.518 was removed from the server and Web site and was placed in an archive file.

Revised 10-22-2009
Added "ROUND CONCRETE STRENGTH TO ONE TENTH KSI." to the designer note under the Minimum Concrete Strength Table.

At MINIMUM CONCRETE STRENGTH TABLE:
- Changed wording in the table title: from "P.S.I." to "K.S.I."
- Added KSI to the table that lists concrete strength.

At CALCULATED PRESTRESS LOSSES TABLE:
- Added "TOTAL LOSSES …..KSI" row to the table.

At SECTION AT CENTERLINE SPAN:
- Added bar designation "G1001E" to the top tie bar.

At DETAIL "A":
- Changed note to read "3/4" DIA. x 2'-0" ROD 2" THREADED. SEE SPECIAL PROVISIONS FOR COATING REQUIREMENTS"

At CONCRETE END DIAPHRAGM:
- Changed sub-title from "INTEGRAL ABUTMENT (SEE B813 FOR DIAPHRAGM DETAILS)" to "SEE SUPERSTRUCTURE DETAILS AND REINFORCEMENT FOR DIAPHRAGM DETAILS"

Revised 04-22-2009
ADDED: "CALCULATED PRESTRESS LOSSES" box to the sheet.

REVISED: The input data fields to show dashed lines to indicate where designer needs to input information.

At CONCRETE END DIAPHRAGM:
- Changed the sub-title to read: "INTEGRAL ABUTMENT (SEE B813 FOR DIAPHRAGM DETAILS)"

Re-Approved 10-26-2005
Specified certain notes as "designer notes", which are to be removed prior to plotting final plan

At BEAM ELEVATION:
- Clarified 2-G1303E & G1607E spacing at end of beam
- Changed HOLD DOWN POINT *to* HOLD DOWN POINT ⑦

At G1303E bar bend: Changed $11^1/_2$" dimension *to* $12^1/_2$"

Under GENERAL NOTES: Added ⑦ CENTER OF GRAVITY OF HOLD DOWNS WHEN MULTIPLE HOLD DOWNS ARE USED.

Revised 03-31-2005
Under GENERAL NOTES: changed note ⑥ *from* FOR INTEGRAL ABUTMENT. SOLE PLATE CAN BE ELIMINATED OR BE REPLACED WITH APPROVED PROTECTED PLATE. *to* FOR INTEGRAL ABUTMENT, SOLE PLATE CAN BE ELIMINATED OR REPLACED WITH AN APPROVED PROTECTION PLATE.

Approved, and signed, April 29, 2003.

Figure 5-397.531
82MW Prestressed Concrete Beam (Pretensioned) 82MW-

Approved, and signed, September 22, 2011. Last date revised: December 2, 2015

Revised 12-02-2015

At END VIEW:

- Changed the note under the END VIEW title to read: Cut strands flush with concrete. Cover ends with sealant per approved products list "Bridge-Prestressed Beams-Cut Strand Sealant."
- Turned the top of the G608E bars inward to be consistent with other beam sheets.
- Within the "At contractor's option" note: changed the wording *from* "…2 – ½" dia. Strands" *to* "…TWO, ½" min. dia. strands…" for clarity.
- Added a break line at mid-depth of the beam to free up space on the sheet.

At BEAM ELEVATION:

- The term "Bursting" was changed to "Splitting" in the designer note at the beam end.
- Bars G608E and G609E have been added to the alternate spacing dimension near the end of the beam.
- A 3" dimension was added near the end of the beam to clarify the starting location for 2- G608E bars.
- Removed the bubble line around the designer note pointing to the sole plate dimension.
- Clarified the location of G402E bars.
- Replaced the G402E bars with G404E and changed the name of the G404E bar to G402E.
- Added a break line at mid-depth of the beam to free up space on the sheet.

At SECTION AT CL SPAN:

- Changed the note on the right side of the web from "1¼" CLR. (TYP.)" to "1¼" CLR."
- Added note "1 1/8" CLR. and circled note 9 at the lower left corner.
- Changed bar G404E to G402E.
- Added a break line at mid-depth of the beam to free up space on the sheet.

At CONCRETE END DIAPHRAGMS and STEEL INTERMEDIATE DIAPHRAGM:

- Changed the look of the elevation views to better represent the actual beam flanges and web.
- Added Designer Note: "Min. Distance between threaded insert and end of beam is 3"".

At MINIMUM CONCRETE STRENGTH – KSI Table

- Added Designer Note "Indicate min. required concrete strength, round concrete strength to one tenth KSI."

At GENERAL NOTES:

- Removed the note "Approximate weight of beam is __ tons."
- Changed 6th note from "Prestressing strands shall be 0.6" diameter, 7-wire low relaxation strand, conforming to ASTM A416, Grade 270." to "Use 0.6" dia. 7-wire low relaxation prestressing strand, conforming to ASTM A416, grade 270."
- Added circled note 9 "Typ. Clr. for entire bottom flange."

REINFORCEMENT CHANGE:

- Removed the L shaped G402E from the bar bend details.
- Renumbered the U shaped G404E bar to G402E and made the change throughout the sheet.

Re-Approved 01-13-2015

At the Y DISTANCES TABLE:

- Changed note from "(IN INCHES)" to "(INCHES)" to the end of the table title.

At CAMBER DIAGRAM:

- Changed the "Initial Total Camber" *to* "Erection Camber" in the detail.
- Changed the 1st Camber Diagram note to read: "Erection camber given is after diaphragms are in place."
- Within the 2nd Camber Diagram note, changed the word "Railing" to "Barrier"
- Added to the end of the 3rd Camber Diagram note: "Provide copy of elevations to the engineer"

At GENERAL NOTES:

- Changed the 2nd note to read: Mark each beam showing bridge number, casting date, and individual identification letters and numbers on the face of the beam, near the end, so located that they will be exposed

after the end diaphragms have been cast. Mark fascia beams on the inside face. Ensure all markings are stencilled and clearly legible. For location of beams, see framing plan.

- In the 3rd note: Changed the word "shall" to "is" and removed the "Mn/DOT" reference.
- Changed the 7th to read: Prestressing strands shall be 0.6" diameter, use 7-wire low relaxation prestressing strand, conforming to ASTM A416, grade 270.
- Added Note: "Apply an approved sealer to the sides of the beam near each end per the special provisions."
- Changed the end of numbered note ⑤: *from:* "per special provisions" *to* "per approved products list"
- Removed the "MnDOT" reference from numbered note ⑦.

REINFORCEMENT CHANGE:

- Removed G407E from the bar bend details and at the Beam Elevation and Section at ℄ Span locations.
- Changed the G402E and G508E bar bend detail shape and separated to two bend details.
- Increased bar sizes, G505E and G508E to G605E and G608E throughout the standard. Also added bar G609E to the bar bend details and the beam end at the "Beam Elevation".

At END VIEW:

- Added 1 ¼" clr. to the G605E bar designation.
- Added subtitle: Cut strands flush with concrete. Cover ends with one component polyurethane sealant per approved product list. (G609E bar not shown)

At BEAM ELEVATION:

- Changed the bursting reinforcement spacing to 3" in the designer note at the beam end.
- Added clearance dimension "G605E 2" CLR." in the top flange at the beam end.
- Changed the web reinforcement at the beam end to an alternating sequence with the G608E and G609E bars. Also changed the accompanying notes.
- Removed the G407E from the detail and the dimension line for spacing.
- Changed the 3" Max. Dia. Sleeve for Hauling note to "Optional:"

At DETAIL "A":

- Changed threaded rod note to read "3/4" dia. x 2'-0" rod 2" threaded. See spec. 2405.3.K for coating requirements"

At SECTION AT ℄ SPAN:

- Removed the G407E bar and accompanying note from the detail.

Revised 04-17-2013

This standard was updated to convert reinforcing bar marks from metric to U.S. customary bar designations.

Revised 05-24-2012

At End View - Changed the spacing of the G2506E in the top flange *from* 2 sps. @ 8" = 1'-4" *to* 2 sps. @ 9" = 1'-6". Changed the spacing of the center two G2506E *from* 9" *to* 5" at fabricators request.

At Section at ℄ of Span

- Changed the web vertical bars *from* 2-G1302E "C" shaped bars *to* a single upside down "U" shaped G1304E bar.
- Added a G1307E "L" shape bar at the bottom of the G1304E on each side in the bottom flange.
- Changed the location of the G2506E bars due to the spacing change in the "End View".

At Beam Elevation

- Added an additional 3" max. dia. sleeve for hauling, 2'-0" from the original, away from the end of the beam.
- At the top of the elevation view, a space was added at the location where the G1302E bars end and the G1304E/G1307E bars start. This is labeled with a blank dimension to be filled in by the designer (12" max).

- The reinforcement and the reinforcement labeling in the elevation has changed to show where the 2-G1302E bars end and the G1304E/G1307E bars start.
- At the bottom of the elevation view, the reinforcement labeling was changed *from* 2-G1003E (sp. w/G1302E) *to* 2-G1003E & 2-G1307E (sp. w/G1304E).
- At the "Symmetrical about ℄ Span" location, the bar spacing designation was changed *from* G1302E spg. except as noted *to* G1304E spg. except as noted.
- Bar G1304E was added to the note at the top of the elevation view pointing out the G1001E bars.

At Bar Bending Details – Added the G1304E and G1307E bar details.

Approved, and signed, September 22, 2011
NEW STANDARD

Figure 5-397.532
96MW Prestressed Concrete Beam (Pretensioned) 96MW-

Approved, and signed, September 22, 2011. Last date revised: December 2, 2015

Revised 12-02-2015

At END VIEW:

- Changed the note under the END VIEW title to read: Cut strands flush with concrete. Cover ends with sealant per approved products list "Bridge-Prestressed Beams-Cut Strand Sealant."
- Turned the top of the G608E bars inward to be consistent with other beam sheets.
- Within the "At contractor's option" note: changed the wording *from* "…2 – ½" dia. Strands" *to* "…TWO, ½" min. dia. strands…" for clarity.
- Slightly adjusted the location of the draped strands to show top strands 3" down from the top of the beam.
- Added a break line at mid-depth of the beam to free up space on the sheet.

At BEAM ELEVATION:

- The term "Bursting" was changed to "Splitting" in the designer note at the beam end.
- Bars G608E and G609E have been added to the alternate spacing dimension near the end of the beam.
- A 3" dimension was added near the end of the beam to clarify the starting location for 2- G608E bars.
- The note for the "Optional: 3" Max. Dia. Sleeve for hauling…" has been changed to circled note 10 and the note has moved under the General Notes.
- Removed the bubble line around the designer note pointing to the sole plate dimension.
- Clarified the location of G402E bars.
- Replaced the G402E bars with G404E and changed the name of the G404E bar to G402E.
- Added a break line at mid-depth of the beam to free up space on the sheet.

At SECTION AT CL SPAN:

- Changed the note on the right side of the web from "1¼" CLR. (TYP.)" to "1¼" CLR."
- Added note "1 1/8" CLR. and circled note 9 at the lower left corner.
- Changed bar G404E to G402E.
- Added a break line at mid-depth of the beam to free up space on the sheet.

At CONCRETE END DIAPHRAGMS and STEEL INTERMEDIATE DIAPHRAGM:

- Changed the look of the elevation views to better represent the actual beam flanges and web.
- Added Designer Note: "Min. Distance between threaded insert and end of beam is 3"".

At MINIMUM CONCRETE STRENGTH – KSI Table

- Added Designer Note "Indicate min. required concrete strength, round concrete strength to one tenth KSI."

At GENERAL NOTES:

- Removed the note "Approximate weight of beam is __ tons."
- Changed 6th note from "Prestressing strands shall be 0.6" diameter, 7-wire low relaxation strand, conforming to ASTM A416, Grade 270." to "Use 0.6" dia. 7-wire low relaxation prestressing strand, conforming to ASTM A416, grade 270."
- Added circled note 9 "Typ. Clr. for entire bottom flange."
- Added circled note 10 "Optional: 3" Max. Dia. Sleeve for hauling…"

REINFORCEMENT CHANGE:

- Removed the L shaped G402E from the bar bend details.
- Renumbered the U shaped G404E bar to G402E and made the change throughout the sheet.

Re-Approved 01-13-2015

At the Y DISTANCES TABLE:

- Changed note from "(IN INCHES)" to "(INCHES)" to the end of the table title.

At CAMBER DIAGRAM:

- Changed the "Initial Total Camber" *to* "Erection Camber" in the detail.
- Changed the 1st Camber Diagram note to read: "Erection camber given is after diaphragms are in place."
- Within the 2nd Camber Diagram note, changed the word "Railing" to "Barrier"

- Added to the end of the 3rd Camber Diagram note: "Provide copy of elevations to the engineer"

At GENERAL NOTES:

- Changed the 2nd note to read: Mark each beam showing bridge number, casting date, and individual identification letters and numbers on the face of the beam, near the end, so located that they will be exposed after the end diaphragms have been cast. Mark fascia beams on the inside face. Ensure all markings are stencilled and clearly legible. For location of beams, see framing plan.
- In the 3rd note: Changed the word "shall" to "is" and removed the "Mn/DOT" reference.
- Changed the 7th to read: Prestressing strands shall be 0.6" diameter, use 7-wire low relaxation prestressing strand, conforming to ASTM A416, grade 270.
- Added Note: "Apply an approved sealer to the sides of the beam near each end per the special provisions."
- Changed the end of numbered note ⑤: *from:* "per special provisions" *to* "per approved products list"
- Removed the "MnDOT" reference from numbered note ⑦.

REINFORCEMENT CHANGE:

- Removed G407E from the bar bend details and at the Beam Elevation and Section at ℄ Span locations.
- Changed the G402E and G508E bar bend detail shape and separated to two bend details.
- Increased bar sizes, G505E and G508E to G605E and G608E throughout the standard. Also added bar G609E to the bar bend details and the beam end at the "Beam Elevation".

At END VIEW:

- Added 1 ¼" clr. to the G605E bar designation.
- Added subtitle: Cut strands flush with concrete. Cover ends with one component polyurethane sealant per approved product list. (G609E bar not shown)

At BEAM ELEVATION:

- Changed the bursting reinforcement spacing to 3" in the designer note at the beam end.
- Added clearance dimension "G605E 2" CLR." in the top flange at the beam end.
- Changed the web reinforcement at the beam end to an alternating sequence with the G608E and G609E bars. Also changed the accompanying notes.
- Removed the G407E from the detail and the dimension line for spacing.
- Changed the 3" Max. Dia. Sleeve for Hauling note to "Optional:"

At DETAIL "A":

- Changed threaded rod note to read "3/4" dia. x 2'-0" rod 2" threaded. See spec. 2405.3.K for coating requirements"

At SECTION AT ℄ SPAN:

- Removed the G407E bar and accompanying note from the detail.

Revised 04-17-2013

This standard was updated to convert reinforcing bar marks from metric to U.S. customary bar designations.

Revised 05-24-2012

At End View - Changed the spacing of the G2506E in the top flange *from* 2 sps. @ 8" = 1'-4" *to* 2 sps. @ 9" = 1'-6". Changed the spacing of the center two G2506E *from* 9" *to* 5" at fabricators request.

At Section at ℄ of Span

- Changed the web vertical bars *from* 2-G1302E "C" shaped bars *to* a single upside down "U" shaped G1304E bar.
- Added a G1307E "L" shape bar at the bottom of the G1304E on each side in the bottom flange.
- Changed the location of the G2506E bars due to the spacing change in the "End View".

At Beam Elevation

- Added an additional 3” max. dia. sleeve for hauling, 2’-0” from the original, away from the end of the beam.
- At the top of the elevation view, a space was added at the location where the G1302E bars end and the G1304E/G1307E bars start. This is labeled with a blank dimension to be filled in by the designer (12” max).
- The reinforcement and the reinforcement labeling in the elevation has changed to show where the 2-G1302E bars end and the G1304E/G1307E bars start.
- At the bottom of the elevation view, the reinforcement labeling was changed *from* 2-G1003E (sp. w/G1302E) *to* 2-G1003E & 2-G1307E (sp. w/G1304E).
- At the “Symmetrical about ℄ Span” location, the bar spacing designation was changed *from* G1302E spg. except as noted *to* G1304E spg. except as noted.
- Bar G1304E was added to the note at the top of the elevation view pointing out the G1001E bars.

At Bar Bending Details – Added the G1304E and G1307E bar details.

Approved, and signed, September 22, 2011
NEW STANDARD

Figure 5-397.550
14”, 18” & 22" Rectangular Prestressed Concrete Beam (Pretensioned) RB-___

Approved, and signed, October 22, 2008. Last date revised: January 13, 2015

Re-Approved 01-13-2015

At CAMBER DIAGRAM:

- Changed the “Initial Total Camber” *to* “Erection Camber” in the detail.
- Within the 1st Camber Diagram note, changed the word “Railing” to “Barrier”
- Changed the 2nd Camber Diagram note to read: “Contractor will take elevations at top of beams after erection and will allow for deflection shown to enable building forms to correct grade and specified slab thickness. Provide copy of elevations to the engineer”

At GENERAL NOTES:

- Removed the 1st note: “Tops of beams shall be rough floated and broomed transversely for bond.”
- Changed the 3rd note to read: Mark each beam showing bridge number, casting date, and individual identification letters and numbers on the face of the beam, near the end, so located that they will be exposed after the end diaphragms have been cast. Mark fascia beams on the inside face. Ensure all markings are stencilled and clearly legible. For location of beams, see framing plan.
- In the 4th note: Changed the word “shall” to “is” and removed the “Mn/DOT” reference.
- Changed numbered note ③ to read: Use 7-wire low relaxation prestressing strand, conforming to ASTM A416, grade 270.
- Added to the end of numbered note ⑥: Beams detailed to include a tapered plate per standard figure B309 must include sole plate.
- Changed numbered note ⑦ to read: For inserts in the outside of fascia beam, adjust the rod length according to the overhang dimension.
- Added numbered note ⑨: Rough float and broom transversely for bond per spec. 2405.3.D.

At All END VIEWS:

- Added ¾” to the Chamfer at the bottom flange.
- Changed the subtitle to read: Cut strands flush with concrete. Cover ends with one component polyurethane sealant per approved product list.

At BEAM ELEVATION:

- Changed the look of the Sole Plate to match the B303 detail.

At SECTION AT ℄ SPAN:

- Added dimension line and numbered note at the top flange location for rough finish guidance.

At DETAIL “A”:

- Changed threaded rod note to read “3/4” dia. x 2’-0” rod 2” threaded. See spec. 2405.3.K for coating requirements”

CHANGED DESIGNER NOTE to read: For bridges with semi-integral and parapet abutments, design the concrete end diaphragm to accommodate the shallow beam depth, as no standard end diaphragm detail exists.

Revised 04-17-2013

This standard was updated to convert reinforcing bar marks from metric to U.S. customary bar designations.

Revised 10-22-2009

At the BAR BEND DETAILS:

- added bar G1305E.
- at the G1603E bar bend, Changed the h+4 ½” to h+4”

Added “ROUND CONCRETE STRENGTH TO ONE TENTH KSI.” to the designer note under the Minimum Concrete Strength Table.

Added DETAIL “B” (showing placement of G1305E bar) to the sheet.

At the GENERAL NOTES: Added numbered note ⑧ "Place G1001E bar on top of the top row of prestressing strands in the bottom of the beam."

At END VIEW:
- Replaced the original "END VIEW" with three new "END VIEWS" reflecting the different size beams, reinforcement and strand options. (End View-22" RB, End View-18" RB, End View-14" RB)

At BEAM ELEVATION:
- Added bar no. G1305E to the end of the beam.

At STRAND ARRANGMENT TABLE:
- Added "3rd ROW FROM BOTTOM" row to the table.

At MINIMUM CONCRETE STRENGTH TABLE:
- Changed wording in the table title: from "P.S.I." to "K.S.I."
- Added KSI to the table that lists concrete strength.

At CALCULATED PRESTRESS LOSSES TABLE:
- Added "TOTAL LOSSES …..KSI" row to the box.

At SECTION AT CENTERLINE SPAN:
- Changed reinforcement clearance dimension at the bottom of the beam from 1 ½" to 1 ¼".
- Added additional strand options to the existing bottom two rows leaving a 2" dimension at the center of the beam, also added an additional third row of strand options from the bottom at a 2" spacing.

At DETAIL "A":
- Changed note to read "3/4" DIA. x 2'-0" ROD 2" THREADED. SEE SPECIAL PROVISIONS FOR COATING REQUIREMENTS"

Revised 04-22-2009

ADDED: "CALCULATED PRESTRESS LOSSES" box to the sheet.

REVISED: The input data fields to show dashed lines to indicate where designer needs to input information.

Revised 12-17-2008

At End View
- Added 1¼" clear dimension to the side.
- Rescaled the size of the G1302E bar.

At Beam Elevation
- Changed spacing of G1302E bars near the bearing from 2" to 2½" and changed dimension string at the top of the beam near the bearing from 2'-10" to 2'-11".
- Added "E" to bar mark G1302 at the end of the girder.

At Section at CL Span
- Lowered the line indicating the "Center of Gravity of Strands" to match the beam elevation.
- Rescaled the size of the G1302E bar.
- Added CL to the section.

Strand Arrangement Table
- Revised the wording in the "Location" column.
- Added note "All Straight Strand" below the table.

General Notes
- Changed note from "As an alternate to the diaphragm anchorages shown…." to "As an alternate to the end diaphragm anchorages shown…."
- Changed note ④ from "If spacing is less than the dimension shown, stagger bars to avoid interference." to "May stagger bars to avoid interference."
- Changed note ⑥ from "For integral abutment. Sole plate can be eliminated…." to "For integral abutment bridges, sole plate can be eliminated…."
- Changed note ⑦ from "For inserts in the outside of fascia beam, the length shall be…." to "For inserts in the outside of fascia beam, the rod length shall be…."

Reinforcement Details

- Bar G1001E - Changed horizontal bar dimension from 1'11" to 1'-11½" to match side clearance.
- Bar G1302E - Changed vertical height from h + 4" to h + 4½". Changed horizontal bar dimension from 1'-6" to 1'-10" to match other PCB.
- Bar G1603E - Changed vertical height from h + 4" to h + 4½". Changed horizontal bar dimension from 8" to 10".

At Concrete End Diaphragm

- Changed title from "Concrete End Diaphragm" to "Concrete End Diaphragm Anchorages".
- Changed note below the detail from "(See detail B816 for diaphragm details)" to "(See detail B816 for concrete end diaphragm details)".
- Added "CL Beam" to plan view.

At Section Height "h" Table

- Changed note below the table from "Place an "x" in the appropriate box." to "An "x" in the box indicates the section height."

Miscellaneous

Added "- - - - -" to various locations to indicate the designer should fill in the blank.

Re-Approved 10-22-2008

At Beam Elevation

- Changed shear reinforcement spacing between 3' from the end of the beam to the centerline of the span.
- Changed (16" MAX.) to 16" MAX. SPG. (Italicized designer note)

At Beam Elevation (cont'd)

- Removed "(MIN.)" from 2'-10"(MIN.) dimension near the end of the beam.
- Changed ½" vee to ½" chamfer.
- Added 2-G1302 bar mark to designate reinforcement.

At End View

- Changed the wording from "No Bevel" to "No Chamfer".

Miscellaneous

CHANGED: "CONTRACTOR SHALL PROVIDE TEMPORARY BRACING IF NEEDED" block to "CONTRACTOR SHALL VERIFY STABILITY OF FASCIA BEAMS FROM OVERTURNING (NO PERMANENT BEAM DIAPHRAGMS ARE PRESENT). CONTRACTOR SHALL PROVIDE TEMPORARY BRACING."

ADDED: "OVERHANG SUPPORT CONCEPT SKETCH" detail with note referencing the "Construction Notes" on the front portion of the bridge plans.

ADDED: Designer note as reminder to include rectangular beam temporary bracing note to the "Construction Notes" on the front portion of the plans.

CHANGED: "At this time rectangular beams are used with integral abutments only" block to italicized Designer Note.

ADDED: Clouded-Italicized Designer Note to sheet.

CHANGED: Note below the existing Prestressing Strand Diameter box to a Designer Note with italicized text.

Approved, and signed, April 29, 2003.

Figure 5-397.627(A)
Waterproof Expansion Device (With Type F Barrier)

Approved and signed, August 24, 2016. Last date revised: January 5, 2017

Revised 01-05-2017
At SECTION B-B:
- Added Designer note: "On joint replacement projects omit elevations"
- Changed all the X's to underbars for the elevation and abutment "fill in" locations.

Approved 08-24-2016
GENERAL - Throughout the Standard:
- Sheet number changed from 5-397.627 to 5-397.627(A) to accommodate the addition of a Type S Barrier (Fig. 5-397.627(B)).
- Removed the bituminous felt from the underside of the barrier plate and the accompanying note.

At SECTION THROUGH BARRIER:
- Labeled top of extrusion and added note ⑦.
- Added "*" and clarifying note "* Top of Block Out".

At BARRIER ELEVATION:
- Removed bituminous felt.
- Added note ⑨ (2 locations).

At GENERAL NOTES:
- Updated all notes to use active voice.
- Added note "Payment length is based on the horizontal distance between the outside edges of the deck measured along the centerline of joint."
- Updated "Designer Note" to include both notes ② and ③.
- Removed note ⑦.
- Added new note ⑦, ⑧, and ⑨.

At PLAN VIEW @ EXPANSION DEVICE:
- Added note ⑧.

At SECTION B-B:
- Added note ⑦ (at 2 locations).

Revised 09-11-2014
Under GENERAL NOTES:
- Changed the 5th note *From:* ¾" DIA. X ½" flathead cap screw…. *To:* ¾" DIA. X 1½" flathead cap screw….
- Changed the 6th note *From:* Length of payment for device is from out to out of extrusion along centerline of joint. *To:* Length of payment for device is from outer end to outer end of extrusion along centerline of joint. Refer to special provisions for more specific payment information.

Revised 11-06-2013
Under GENERAL NOTES:
- Changed numbered note ② to read: __At 45°F; __AT 90°F. 2" At All Temps.
- Added a designer note in front of numbered note ② for the designer to "Choose One Joint Opening Note And Delete Other".
- At numbered note ⑤: Removed the sheet "1" reference and left the sheet no. "blank" to be filled in.

Revised 05-24-2012
Changed all instances of Railing *to* Barrier.

At BARRIER ELEVATION:

- Changed note to read: 1" Dia. X 6" Long Slotted Hole For ¾ " Dia. X 1 ½ " Flathead Cap Screw With ½ " Square Or Hex Socket. Apply Bridge Bearing Lubricant Per MnDot Approved Products List To Screw Threads.
- Changed note to read: ℄ ¾ " Dia. X 1 ½ " Flathead Cap Screw With ½ " Square Or Hex Socket. Apply Bridge Bearing Lubricant Per MnDot Approved Products List To Screw Threads.
- Added note: 2" Long Hex Coupling Nut And ¾ " Dia. X 4" Bolt. Do Not Tighten Down Cap Screw. See Detail "A".

At DETAIL "A":

- Removed following note from detail: "After Assembly, Field Weld Lugs….."
- Changed the look of the cap screw from a slotted type to a hex head type.
- Added note: ¾ " Dia. X 1 ½ " Flathead Cap Screw With ½ " Square Or Hex Socket. Apply Bridge Bearing Lubricant Per MnDot Approved Products List To Screw Threads.

Under GENERAL NOTES:

- Changed all instances of Mn/Dot Spec. *to* Spec.
- Added note: ¾ " Dia. X ½ " Flathead Cap Screw With ½ " Square Or Hex Socket Per Spec 3391. Cap Screws Shall Be Countersunk 1/16" Below Top Of Plate. Apply Bridge Bearing Lubricant Per MnDot Approved Products List To Screw Threads

<u>Revised 02-23-2011</u>

Under GENERAL NOTES:

- Added - ⑦ Use The Largest Single Piece Possible. Use Of Small Pieces Or Scraps Secured Together Is Prohibited.

At RAILING ELEVATION:

- Added numbered note ⑦ to the note ½" Bit. Felt Or Equal

At Detail "A":

- Added numbered note ⑦ to the note ½" Bit. Felt Or Equal

Approved, and signed, November 6, 1995.

Figure 5-397.627(B)
Waterproof Expansion Device (With Type S Barrier)

Approved, and signed, August 24, 2016. Last date revised: January 5, 2017

Revised 01-05-2017
At SECTION B-B:

- Added Designer note: "On joint replacement projects omit elevations"
- Changed all the X's to underbars for the elevation and abutment "fill in" locations.

Approved, and signed, August 24, 2016
NEW STANDARD

Figure 5-397.628
Waterproof Expansion Device Snow Plow Protection (Use On Skews Over 15° And Less Than 50°)

Approved, and signed, September 26, 2003. Last date revised: November 06, 2013

Revised 11-06-2013
At WELDING PROCEDURE FOR PLOW FINGERS:

- Changed note I to read: All welding shall be done with 1/8" diameter low hydrogen SMAW electrodes type E7016 or E7018.
- Added a new note II (expanding the range of existing notes from Roman Numerals I to V) new note reads: "Prior to welding, remove the galvanized coating in the weld area by grinding."
- Changed note III to read: Weld pass one in areas A and B first, then area C, follow with passes two and three in same order, as shown in Detail "B".

Revised 05-24-2011
Under GENERAL NOTES:
Removed: Numbered note ⑥ "Add backing bar as required: ½" min. thickness 1½" deep."

At WELDING PROCEDURE FOR PLOW FINGERS:

- Removed: Lettered note "E." "Repair all galvanizing damaged by removal and welding, in accordance with Mn/DOT spec.2471.3L." Also changed the lettered notes A, B, C, and D to roman numerals I, II, III, and IV.

At PLAN VIEW AT EXPANSION DEVICE:

- Changed the note from: "Railing face and slope break line" to "Barrier face and slope break line"
- Added: L 2 ½" x 2 ½" x ¼" under each snow plow finger plate at the traffic approach side of the expansion device.

At SECTION A-A:

- Changed: The expansion device look (extrusion and gland) to the more commonly used type of device.
- Added: L 2 ½" x 2 ½" x ¼" under the plow finger at the traffic approach side of the expansion device with welding information.
- Changed: The length of the plow finger plate, to extend 1½" onto the L 2 ½" x 2 ½" x ¼ on the traffic approach side of the expansion device.
- Added: 1" dimension from the plow finger plate to the end of the L 2 ½" x 2 ½" x ¼ .
- Removed note: "See detail "C" if top flat portion for return weld is less than 5/8" ⑥"

At DETAIL "A":

- Removed: The 3/8" dimension showing the end of the plow finger plate to the edge of the extrusion.
- Added: L 2 ½" x 2 ½" x ¼" under the plow finger plate at the traffic approach side of the expansion device with welding information.
- Added: A 1" dimension from the snow plow finger plate to the end of the L 2 ½" x 2 ½" x ¼ .
- Added: A 5" dimension showing the length needed for the L 2 ½" x 2 ½" x ¼ .
- Moved: Section arrows for Section B-B out to give a better view of the plate and angle shape. Also added arrows C-C to show the traffic approach side of the plate and angle shape.

At DETAIL "B":

- Removed: Numbered note ⑥ from the detail.
- Added: L 2 ½" x 2 ½" x ¼" under the plow finger plate at the traffic approach side of the expansion device. Also added the 1" dimension from the plow finger plate to the end of the L 2 ½" x 2 ½" x ¼ .

- Changed: The length of the plow finger plate, to extend 1½" onto the L 2 ½" x 2 ½" x ¼ on the traffic approach side of the expansion device. Also lengthened the Return Weld Length to 2" min. to accommodate the length of the plow finger plate.
- Changed the section arrows from C-C to D-D.

Changed the name "SECTION C-C" to "SECTION D-D"
Changed the name of "SECTION B-B" to "VIEW B-B"
Added "VIEW C-C" to the sheet showing the plow finger plate and the angle shape from the traffic approach side.

Approved, and signed, September 26, 2003.

Figure 5-397.630(A)
Waterproof Expansion Device (Raised Median or Sidewalk with F Barrier and Parapet)

Approved and signed, August 24, 2016.

Approved 08-24-2016
GENERAL:

- Sheet number changed from 5-397.630 to 5-397.630(A) to accommodate the addition of a Type S Barrier (Fig. 5-397.630(B)).
- Changed the title of the sheet from "Waterproof Expansion Device (Raised Median or Sidewalk with Parapet)" to "Waterproof Expansion Device (Raised Median or Sidewalk with F Barrier and Parapet)".

At SECTION D-D:
Changed note from "3/4" dia. x 4" bolt" to "3/4" Dia. x 4" bolt staggered (Typ.) at 1'-0" max. spacing"
Added note "(Integral Sidewalk)" beneath title.

At ELEVATION:
Changed sheet reference from 5-397.627 to 5-397.627(A).

At ELEVATION RAISED SIDEWALK DETAILS:
Added 1'-9" dimension to plate size.
Added 6" max. to left side of joint.

Under GENERAL NOTES:
Updated notes to use active voice.
Changed sheet reference from 5-397.627 to 5-397.627(A).
Added "Provide bond beaker (duct tape, etc.) to underside of cover plate" to end of note ①.

At SECTION THROUGH BARRIERS – INTEGRAL SIDEWALK
Added "1'-6" Max. Spg. Bent Studs" note.
Removed aesthetic reveal on backside of F barrier.

At MEDIAN ELEVATION:
Updated detail to more closely match layout and dimensions shown in "Elevation - Raised Sidewalk Details".

Revised 05-25-2016
Under GENERAL NOTES:

- Changed numbered note ① to read: Provide smooth concrete finish beneath plate with 0" min. to 1/8" max. gap between concrete and underside of plate.
- Changed numbered note ③ to read: Dimensions shown are required to comply with A.D.A. standards.
- Changed the term within numbered note ④: From “Bridge Bearing Lubricant” to “Bridge Grease”.

Throughout the Standard:

- Removed the Bit Felt from the underside of the sidewalk, median, barrier and parapet plates and the accompanying note.
- Changed the taper of the concrete surface from the expansion/movement side of the cover plate to the top of the sidewalk surface. The length of taper changed from 1 ½” to 6” minimum to comply with A.D.A. standards.

At the Raised Sidewalk Options 1 &2:

- Changed the 8” sidewalk height dimension to an open dimension to be filled in.

At the Raised Sidewalk Details:

- Changed the plate note to read: 3/8" Raised Pattern Plate to be recessed 1/8" below walkway surface and 1/4" below face of sidewalk.

At Section D-D:

- Added numbered note ③ to the section name.
- Changed the dimension labeled as numbered note③ to 1/8".

At Elevation:

- Added a dimension with numbered note ② to the expansion joint/cover plate movement location.

At Detail "A":

- Added numbered note ③ to the detail name.
- Added numbered note ① to the gap between the plate and the sidewalk surface.
- Changed the dimension showing the height of the concrete taper from 1/2" max. to 1/2" ± 1/8".
- Changed the concrete taper length from 1 ½" to 6" minimum to comply with A.D.A. standards.

At Median Elevation:

- Removed the "See Detail "A" with leader line and circled location.

Revised 11-06-2013

Under GENERAL NOTES:

- Changed first note *from*: See "Detail"……. *to*: See "Standard Figure"……
- Added second note: 3/4 " Dia. X 1" Flat Head Cap Screw With 1/2 " Square Or Hex Socket Per Spec 3391. Cap Screws Shall Be Countersunk 1/16 " Below Top Of Plate. Apply Bridge Bearing Lubricant To Screw Threads. ④
- Changed numbered note ②. Changed the word "Detail" to "Standard Figure" within the note.
- Added numbered note ③. 1/8" (1/4" Max.).
- Added numbered note ④. Lubricant Per MnDot Approved/Qualified Products List: Bridge – Bridge Bearing Lubricant.

At the SHEET TITLE:

- Changed the sub title to read: (Raised Median Or Sidewalk With Parapet)

At SECTION THROUGH SIDEWALK - OPTION 1 and OPTION 2:

- Changed the section name to: "SECTION THROUGH RAISED SIDEWALK" for Option 1 and Option 2.
- Changed the sidewalk slope designation to: " .01'/ FT." with a directional slope line.

At SIDEWALK DETAILS – ELEVATION:

- Changed name from "SIDEWALK DETAILS" to "RAISED SIDEWALK DETAILS".
- Changed note to read: ℄ 3/4 " Dia. X 1" Flat Head Cap Screw With 1/2 " Square Or Hex Socket. Apply Bridge Bearing Lubricant To Screw Threads. ④

At INSIDE ELEVATION:

- Changed the name of the detail *from*: "INSIDE ELEVATION" *to* "ELEVATION".
- Changed the words "Railing" and "Rail" *to* "Barrier" in the subtitle for the detail..
- Changed the look of the plate to reflect the brush curb shape. Added "Top Of Brush Curb" with leader.
- Changed the look of the coupling nuts and 4" bolts to reflect their direction.
- Changed the note pointing to the plate *from* a 10" high plate *to* a 1'-0" high plate.
  Combined two notes into one: 2" LONG HEX COUPLING NUT and 3/4 " DIA. x 4" BOLT with leader line pointing to two locations.
- Changed the note pointing to the coupling nut locations to read: ℄ 3/4 " Dia. X 1" Flat Head Cap Screw With 1/2 " Square Or Hex Socket. Apply Bridge Bearing Lubricant To Screw Threads. ④
- Split the note pointing to the slotted hole and coupling nut location in the plate into two notes. They read:
  (note one) 1" Dia. X 6" Long Slotted Hole For 3/4 " Dia. X 1 ½" Flat Head Cap Screw With ½" Square Or Hex Socket. Apply Bridge Bearing Lubricant To Screw Threads. ④
  (note two) 2" Long Hex Coupling Nut And 3/4 " Dia. X 4" Bolt. Do Not Tighten Down Cap Screw. See Detail "A" On Standard Figure 5-397.627.

At SECTION THROUGH RAILING – INTEGRAL SIDEWALK and related detail locations:

- Changed the word "Railing" to "Barrier" at the title and related detail locations.
- Changed the shape of the plates on the back of the F barrier and front of the parapet barrier to reflect the brush curb shape.
- Changed the shape of the back of the parapet barrier to reflect the 2" x 1'-0" coping.

- Changed the note pointing to the brush curb plate to read: " 3/8" X 1'-0" X 2'-2" Plate With Brush Curb To Be Recessed 1/4" Below Face Of Barrier (3/4" Inside Bend Radius)(Typ.)
- Added the weld symbol at the brush curb plate.

At MEDIAN SECTION:

- Removed the Acetate Gland and related note.
- Removed the Median Joint and changed the accompanying note to read: Symmetrical About ℄ Median.

At DETAIL "A":

- Removed the plate dimension (1'-0 ½") from the Raised Pattern Cover Plate note.

Revised 02-23-2011

Under GENERAL NOTES:

- Added numbered note: ① Use Largest Single Piece Possible. Use Of Small Pieces Or Scraps Secured Together Is Prohibited.
- Added numbered note: ② See Note ② On Detail Sheet 5-397.627.

Added: DETAIL "A" to the sheet. (Showing in detail the expansion/contraction opening of the cover plate and the sidewalk.)

At INSIDE ELEVATION:

- Added: ① to the existing note " ½" Bit. Felt Or Equal"

At MEDIAN SECTION:

- Added: ① to the existing note " ½" Bit. Felt Or Equal"

At SECTION THROUGH SIDEWALK – OPTION 1:

- Added: ① to the existing note " ½" Bit. Felt Or Equal Under Free End Of Plate"

At SECTION THROUGH SIDEWALK – OPTION 2:

- Added: ① to the existing note " ½" Bit. Felt Or Equal Under Free End Of Plate"

At MEDIAN ELEVATION:

- Removed note: "¼" Bevel" from the cover plate.
- Added: ① to existing note " ½" Bit. Felt Or Equal".
- Added note: "SEE DETAIL "A" with leader line to circled area of detail.

At SIDEWALK DETAILS / ELEVATION:

- Removed note: "¼" Bevel" from the cover plate.
- Added: ① to existing note " ½" Bit. Felt Or Equal".
- Added note: "SEE DETAIL "A" with leader line to the circled area of detail.

At SECTION THROUGH RAILINGS – INTEGRAL SIDEWALKS:

- Added the *BIT. FELT* to the detail between the two barriers, under the cover plate.
- Added note: ① " ½" Bit. Felt Or Equal" with leader line to the *BIT. FELT*.

At SECTION D-D:

- Added the *BIT. FELT* to the detail under the cover plate.
- Changed: Both the cover plate and the edge of the concrete to show more of a tapered edge at the expansion side of the detail.
- Removed : The ½" dimension showing the edge of the concrete and the leader line with the word "CHAMFER"
- Added: ① " ½" Bit. Felt Or Equal Under Free End Of Plate" with leader line pointing to the *BIT. FELT*.
- Added note: "SEE DETAIL "A" with leader line to the circled area of detail.

Revised 03-30-2010

At SIDEWALK DETAILS – ELEVATION:

- Adjusted the arrow to point to the correct location for the note " ¾" Dia. x 4" Bolt".

At MEDIAN ELEVATION:

- Added note – "℄ ¾" Dia. x 1" Flat Head Cap Screw". And changed the line style for the note.

- Added the concrete hatch to the view for the deck.

Revised 10-28-2008
At SECTION THROUGH RAILINGS – INTEGRAL SIDEWALK:
- Changed the section to show Bent Studs on the expansion device under the sidewalk.

Approved, and signed, September 26, 2003.

Figure 5-397.630(B)
Waterproof Expansion Device (Raised Median or Sidewalk with S Barrier and Parapet)

Approved, and signed, August 24, 2016.

Approved, and signed, August 24, 2016
NEW STANDARD

Figure 5-397.632(A)
Waterproof Expansion Device (Raised Median or Integral Sidewalk with F Barrier and Curb)

Approved and signed, August 24, 2016.

Approved 08-24-2016
GENERAL:

- Sheet number changed from 5-397.632 to 5-397.632(A) to accommodate the addition of a Type S Barrier Fig. 5-397.632(B)).
- Changed the title of the sheet from "Waterproof Expansion Device (Raised Median or Integral Sidewalk with Curb)" to "Waterproof Expansion Device (Raised Median or Integral Sidewalk with F Barrier and Curb)".

At INSIDE ELEVATION OF CONCRETE CURB:
Changed sheet reference from 5-397.627 to 5-397.627(A).

At SECTION D-D:
Changed note from "3/4" dia. x 4" bolt" to "3/4" Dia. x 4" bolt staggered (Typ.) at 1'-0" max. spacing"
Added note "(Integral Sidewalk)" beneath title.

At OUTSIDE ELEVATION OF F BARRIER:
Changed sheet reference from 5-397.627 to 5-397.627(A).

Under GENERAL NOTES:
Updated notes to use active voice.
Changed sheet reference from 5-397.627 to 5-397.627(A).
Added "Provide bond beaker (duct tape, etc.) to underside of cover plate" to end of note ①.

At SECTION THROUGH BARRIER AND CURB – INTEGRAL SIDEWALK
Added "1'-6" Max. Spg. Bent Studs" note.
Removed aesthetic reveal on backside of F barrier.
Added 11' horizontal dimension to top of curb plate.

At MEDIAN ELEVATION:
Updated detail to match standard figure 5-397.630(A).

Revised 05-25-2016
Under GENERAL NOTES:

- Changed numbered note ① to read: Provide smooth concrete finish beneath plate with 0" min. to 1/8" max. gap between concrete and underside of plate.
- Changed numbered note ③ to read: Dimensions shown are required to comply with A.D.A. standards.
- Changed the term within numbered note ④: From “Bridge Bearing Lubricant” to “Bridge Grease”.

Throughout the Standard:

- Removed the Bit Felt from the underside of the sidewalk, median, barrier and curb plates and the accompanying note.
- Changed the taper of the concrete surface from the expansion/movement side of the cover plate to the top of the sidewalk surface. The length of taper changed from 1 ½” to 6” minimum to comply with A.D.A. standards.

At Detail “A”:

- Added numbered note ③ to the detail name.
- Added numbered note ① to the gap between the plate and the sidewalk surface.

- Changed the dimension showing the height of the concrete taper from 1/2” max. to 1/2” ± 1/8”.
- Changed the concrete taper length from 1 ½” to 6” minimum to comply with A.D.A. standards.

At Median Elevation:

- Changed the curb plate look due to the height of curb changing from 10” to 6”.
- Removed the “See Detail “A” with leader line and circled location.

At Inside Elevation of Concrete Curb:

- Changed the curb plate look due to the height of curb changing from 10” to 6”.
- Changed the plate size dimensions within the note from 1’-8” to 1’-4” due to the curb height change.

At the Outside Elevation of F Barrier:

- Added a dimension with numbered note ② to the expansion joint/cover plate movement location.

At Section D-D:

- Added numbered note ③ to the section name.
- Changed the dimension labeled as numbered note③ to 1/8”.

At Section Through Barrier and Curb-Integral Sidewalk:

- Fixed the look of the revel on the back of the F Barrier
- Adjusted curb and coupling nut dimensions associated with the curb height changing from 10” to 6”.

Approved, and signed, November 06, 2013
NEW STANDARD

Figure 5-397.632(B)
Waterproof Expansion Device (Raised Median or Integral Sidewalk with S Barrier and Curb)

Approved, and signed, August 24, 2016.

Approved, and signed, August 24, 2016
NEW STANDARD

Figure 5-397.900
As-Built Bridge Data

Approved, and signed, September 26, 2003. Last date revised: 10-28-2008.

Revised 10-28-2008
Added: "BRIDGE REMOVAL / BRIDGE OPENING" box, below the center box on the sheet.

Revised 05-27-2005
In left box changed:

- BEARING PADS *to* ELASTOMERIC BEARING PADS
- NEOPRENE PAD MANUFACTURER *to* PAD MANUFACTURER
- SPECIAL SURFACE TREATMENT *to* SPECIAL SURFACE FINISH
- TYPE *to* SYSTEM

In the center box changed:

- Mn/DOT CONSTRUCTION SPECIFICATION NUMBER *to* Mn/DOT SPECIFICATION NUMBER
- 2276 OR 2478 OR 2479 *to* 2478 OR 2479 OR OTHER

In the right-bottom box changed:

- SUBMIT THIS FORM WITH THE PROJECT FINAL, AND SUBMIT A COPY TO THE OFFICE OF BRIDGES AND STRUCTURES … *to* AT THE TIME OF THE FINAL, THIS COMPLETED AS-BUILT BRIDGE DATA SHEET MUST BE SUBMITTED TO THE BRIDGE OFFICE …

Revised 03-02-2005
At top-left corner: changed CONCRETE OVERLAY *to* CONCRETE WEARING COURSE

Approved, and signed, September 26, 2003.

FIGURE N0.	DESCRIPTION	DATE APPROVED	DATE REVISED
5-397.114	Concrete Barrier (Type F, TL-4) With Separate End Post (Without Concrete Wearing Course)	Nov. 06, 2013	11-03-2015
5-397.115(A)	Concrete Barrier (Type F, TL-4) Integral or Semi-Integral Abutment With Integral End Post (Without Concrete Wearing Course)	Jan. 13, 2015	
5-397.115(B)	Concrete Barrier (Type F, TL-4) Parapet Abutment With Integral End Post (Without Concrete Wearing Course)	Jan. 13, 2015	
5-397.115(C)	Concrete Barrier (Type F, TL-4) Integral or Semi-Integral Abutment With Integral End Post (Without Concrete Wearing Course) No approach panel	Jan. 13, 2015	
5-397.116	Concrete Barrier (Type F, TL-4) With Separate End Post (With Concrete Wearing Course)	Nov. 06, 2013	11-03-2015
5-397.117(A)	Concrete Barrier (Type F, TL-4) Integral or Semi-Integral Abutment With Integral End Post (With Concrete Wearing Course)	Jan. 13, 2015	11-03-2015
5-397.117(B)	Concrete Barrier (Type F, TL-4) Parapet Abutment With Integral End Post (With Concrete Wearing Course)	Jan. 13, 2015	
5-397.119	Wire Fence (Design W-1) And Concrete Parapet (Type P-1)	Jan. 05, 2017	
5-397.122	Concrete Barrier (Type F, TL-5) With Integral End Post (With Conc. Wearing Course)	July 25, 2005	05-26-2006
5-397.124	Concrete Barrier (Type F, TL-5) With Integral End Post (Without Conc. Wearing Course)	July 25, 2005	05-26-2006
5-397.125	Concrete Barrier (Type F, TL-5) With Bridge Slab Sidewalk And Integral End Post (With Conc. Wearing Course)	July 25, 2005	05-26-2006
5-397.126	Concrete Barrier (Type F, TL-5) With Bridge Slab Sidewalk And Integral End Post (Without Conc. Wearing Course)	July 25, 2005	05-26-2006
5-397.128	Concrete Barrier (Type F, TL-5) With Glare Screen and Integral End Post (With Conc. Wearing Course)	June 14, 2006	
5-397.129	Concrete Barrier (Type F, TL-5) With Bikeway and Integral End Post (With Conc. Wearing Course)	June 14, 2006	
5-397.130	Solid Median Barrier Type F (With Wearing Course)	Dec. 18, 2003	04-17-2013
5-397.131	Split Median Barrier Type F (With Wearing Course)	Oct. 29, 2004	04-17-2013

* Refer to http://www.dot.state.mn.us/bridge/ for current Bridge CADD Standards

FIGURE N0.	DESCRIPTION	DATE APPROVED	DATE REVISED
5-397.132	Solid Median Barrier And Glare Screen Type F (With Concrete Wearing Course)	Dec. 18, 2003	04-17-2013
5-397.135	Split Median Barrier And Glare Screen Type F (Without Concrete Wearing Course)	Apr. 22, 2004	04-17-2013
5-397.136	Split Median Barrier And Glare Screen Type F (With Concrete Wearing Course)	Apr. 22, 2004	04-17-2013
5-397.137	Offset Split Median Barrier And Glare Screen Type F (With Concrete Wearing Course)	Apr. 22, 2004	04-17-2013
5-397.138(A)	Single Slope Concrete Barrier 36” (Type S, TL-4) (Integral or Semi-Integral Abutment with Guardrail Connection) (Without Concrete Wearing Course)	Aug. 24, 2016	
5-397.138(B)	Single Slope Concrete Barrier 36” (Type S, TL-4) (Integral or Semi-Integral Abutment with Guardrail Connection) (With 2” Concrete Wearing Course)	Aug. 24, 2016	
5-397.138(C)	Single Slope Concrete Barrier 36” (Type S, TL-4) (Integral or Semi-Integral Abutment with Bridge Slab Sidewalk and Guardrail Connection) (Without Concrete Wearing Course)	Aug. 24, 2016	
5-397.138(D)	Single Slope Concrete Barrier 36” (Type S, TL-4) (Integral or Semi-Integral Abutment with Bridge Slab Sidewalk and Guardrail Connection) (With 2” Concrete Wearing Course)	Aug. 24, 2016	
5-397.139(A)	Single Slope Concrete Barrier 36” (Type S, TL-4) (Parapet Abutment with Guardrail Connection) (Without Concrete Wearing Course)	Aug. 24, 2016	
5-397.139(B)	Single Slope Concrete Barrier 36” (Type S, TL-4) (Parapet Abutment with Guardrail Connection) (With 2” Concrete Wearing Course)	Aug. 24, 2016	
5-397.139(C)	Single Slope Concrete Barrier 36” (Type S, TL-4) (Parapet Abutment with Bridge Slab Sidewalk and Guardrail Connection) (Without Concrete Wearing Course)	Aug. 24, 2016	

5-397.139(D)	Single Slope Concrete Barrier 36” (Type S, TL-4) (Parapet Abutment with Bridge Slab Sidewalk and Guardrail Connection) (With 2” Concrete Wearing Course)	Aug. 24, 2016
5-397.140(A)	Single Slope Concrete Barrier 42” (Type S, TL-4) (Integral or Semi-Integral Abutment with Guardrail Connection) (Without Concrete Wearing Course)	Aug. 24, 2016
5-397.140(B)	Single Slope Concrete Barrier 42” (Type S, TL-4) (Integral or Semi-Integral Abutment with Guardrail Connection) (With 2” Concrete Wearing Course)	Aug. 24, 2016
5-397.140(C)	Single Slope Concrete Barrier 42” (Type S, TL-4) (Integral or Semi-Integral Abutment with Bridge Slab Sidewalk and Guardrail Connection) (Without Concrete Wearing Course)	Aug. 24, 2016
5-397.140(D)	Single Slope Concrete Barrier 42” (Type S, TL-4) (Integral or Semi-Integral Abutment with Bridge Slab Sidewalk and Guardrail Connection) (With 2” Concrete Wearing Course)	Aug. 24, 2016
5-397.141(A)	Single Slope Concrete Barrier 42” (Type S, TL-4) (Parapet Abutment with Guardrail Connection) (Without Concrete Wearing Course)	Aug. 24, 2016
5-397.141(B)	Single Slope Concrete Barrier 42” (Type S, TL-4) (Parapet Abutment with Guardrail Connection) (With 2” Concrete Wearing Course)	Aug. 24, 2016
5-397.141(C)	Single Slope Concrete Barrier 42” (Type S, TL-4) (Parapet Abutment with Bridge Slab Sidewalk and Guardrail Connection) (Without Concrete Wearing Course)	Aug. 24, 2016
5-397.141(D)	Single Slope Concrete Barrier 42” (Type S, TL-4) (Parapet Abutment with Bridge Slab Sidewalk and Guardrail Connection) (With 2” Concrete Wearing Course)	Aug. 24, 2016
5-397.142(A)	Single Slope Concrete Barrier 54” (Type S, TL-4) (Integral or Semi-Integral Abutment with Guardrail Connection) (Without Concrete Wearing Course)	Aug. 24, 2016
5-397.142(B)	Single Slope Concrete Barrier 54” (Type S, TL-4) (Integral or Semi-Integral Abutment with Guardrail Connection) (With 2” Concrete Wearing Course)	Aug. 24, 2016

5-397.142(C)	Single Slope Concrete Barrier 54" (Type S, TL-4) (Integral or Semi-Integral Abutment with Bridge Slab Sidewalk and Guardrail Connection) (Without Concrete Wearing Course)	Aug. 24, 2016
5-397.142(D)	Single Slope Concrete Barrier 54" (Type S, TL-4) (Integral or Semi-Integral Abutment with Bridge Slab Sidewalk and Guardrail Connection) (With 2" Concrete Wearing Course)	Aug. 24, 2016
5-397.143(A)	Single Slope Concrete Barrier 54" (Type S, TL-4) (Parapet Abutment with Guardrail Connection) (Without Concrete Wearing Course)	Aug. 24, 2016
5-397.143(B)	Single Slope Concrete Barrier 54" (Type S, TL-4) (Parapet Abutment with Guardrail Connection) (With 2" Concrete Wearing Course)	Aug. 24, 2016
5-397.143(C)	Single Slope Concrete Barrier 54" (Type S, TL-4) (Parapet Abutment with Bridge Slab Sidewalk and Guardrail Connection) (Without Concrete Wearing Course)	Aug. 24, 2016
5-397.143(D)	Single Slope Concrete Barrier 42" (Type S, TL-4) (Parapet Abutment with Bridge Slab Sidewalk and Guardrail Connection) (With 2" Concrete Wearing Course)	Aug. 24, 2016
5-397.144(A)	Split Median Barrier 36" (Type S, TL-4) (Integral or Semi-Integral Abutment) (Without Concrete Wearing Course)	Aug. 24, 2016
5-397.144(B)	Split Median Barrier 36" (Type S, TL-4) (Integral or Semi-Integral Abutment) (With 2" Concrete Wearing Course)	Aug. 24, 2016
5-397.144(C)	Split Median Barrier 36" (Type S, TL-4) (Parapet Abutment) (Without Concrete Wearing Course)	Aug. 24, 2016
5-397.144(D)	Split Median Barrier 36" (Type S, TL-4) (Parapet Abutment) (With 2" Concrete Wearing Course)	Aug. 24, 2016
5-397.145(A)	Split Median Barrier 42" (Type S, TL-4) (Integral or Semi-Integral Abutment) (Without Concrete Wearing Course)	Aug. 24, 2016
5-397.145(B)	Split Median Barrier 42" (Type S, TL-4) (Integral or Semi-Integral Abutment) (With 2" Concrete Wearing Course)	Aug. 24, 2016

5-397.145(C)	Split Median Barrier 42” (Type S, TL-4) (Parapet Abutment) (Without Concrete Wearing Course)	Aug. 24, 2016
5-397.145(D)	Split Median Barrier 42” (Type S, TL-4) (Parapet Abutment) (With 2” Concrete Wearing Course)	Aug. 24, 2016
5-397.146(A)	Split Median Barrier 54” (Type S, TL-4) (Integral or Semi-Integral Abutment) (Without Concrete Wearing Course)	Aug. 24, 2016
5-397.146(B)	Split Median Barrier 54” (Type S, TL-4) (Integral or Semi-Integral Abutment) (With 2” Concrete Wearing Course)	Aug. 24, 2016
5-397.146(C)	Split Median Barrier 54” (Type S, TL-4) (Parapet Abutment) (Without Concrete Wearing Course)	Aug. 24, 2016
5-397.146(D)	Split Median Barrier 54” (Type S, TL-4) (Parapet Abutment) (With 2” Concrete Wearing Course)	Aug. 24, 2016
5-397.147(A)	Solid Median Barrier 36” (Type S, TL-4) (Integral or Semi-Integral Abutment) (Without Concrete Wearing Course)	Aug. 24, 2016
5-397.147(B)	Solid Median Barrier 36” (Type S, TL-4) (Integral or Semi-Integral Abutment) (With 2” Concrete Wearing Course)	Aug. 24, 2016
5-397.147(C)	Solid Median Barrier 36” (Type S, TL-4) (Parapet Abutment) (Without Concrete Wearing Course)	Aug. 24, 2016
5-397.147(D)	Solid Median Barrier 36” (Type S, TL-4) (Parapet Abutment) (With 2” Concrete Wearing Course)	Aug. 24, 2016
5-397.148(A)	Solid Median Barrier 42” (Type S, TL-4) (Integral or Semi-Integral Abutment) (Without Concrete Wearing Course)	Aug. 24, 2016
5-397.148(B)	Solid Median Barrier 42” (Type S, TL-4) (Integral or Semi-Integral Abutment) (With 2” Concrete Wearing Course)	Aug. 24, 2016
5-397.148(C)	Solid Median Barrier 42” (Type S, TL-4) (Parapet Abutment) (Without Concrete Wearing Course)	Aug. 24, 2016

5-397.148(D)	Solid Median Barrier 42” (Type S, TL-4) (Parapet Abutment) (With 2” Concrete Wearing Course)	Aug. 24, 2016	
5-397.149(A)	Solid Median Barrier 54” (Type S, TL-4) (Integral or Semi-Integral Abutment) (Without Concrete Wearing Course)	Aug. 24, 2016	
5-397.149(B)	Solid Median Barrier 54” (Type S, TL-4) (Integral or Semi-Integral Abutment) (With 2” Concrete Wearing Course)	Aug. 24, 2016	
5-397.149(C)	Solid Median Barrier 54” (Type S, TL-4) (Parapet Abutment) (Without Concrete Wearing Course)	Aug. 24, 2016	
5-397.149(D)	Solid Median Barrier 54” (Type S, TL-4) (Parapet Abutment) (With 2” Concrete Wearing Course)	Aug. 24, 2016	
5-397.154	Metal Railing (Type M-1) For Bikeways And Concrete Parapet (Type P-1) (With Integral End Post)	Dec. 02, 2015	
5-397.157	Structural Tube Railing (Design T-1) and Concrete Parapet (Type P-2, TL-4) (With Integral End Post)	Mar. 30, 2010	04-17-2013
5-397.158	Structural Tube Railing (Design T-2) And Conc. Railing (Type F) Or Conc. Parapet (Type P-1)	Dec. 02, 2015	
5-397.160	Ornamental Metal Railing With Fence (Design T-3 Parapet Mount)	Nov. 06, 2013	11-20-2014
5-397.161	Ornamental Metal Railing With Fence (Design T-3 Curb Mount)	Nov. 06, 2013	05-25-2016
5-397.162	Ornamental Metal Railing (Design T-4 Parapet Mount)	Nov. 06, 2013	05-25-2016
5-397.163	Ornamental Metal Railing (Design T-4 Curb Mount)	Nov. 06, 2013	05-25-2016
5-397.166	Concrete Parapet (Type P-1) With Integral End Post (Without Concrete Wearing Course)	Nov. 06, 2013	11-06-2013
5-397.167	Concrete Curb For Use With Ornamental Railing	Nov. 06, 2013	08-24-2016
5-397.173	Concrete Barrier (Type P-4, TL-4) With Integral End Post (With Conc. Wearing Course)	July 25, 2005	04-17-2013
5-397.202	5 Ft. Wire Fence (Design W-1) For Pedestrian Bridges	Jan. 05, 2017	
5-397.205	8 Ft. Wire Fence For Pedestrian Walks	Jan. 05, 2017	
5-397.300	Grouted Injected Fabric Formed Slope Paving	Jan. 05, 2017	
5-397.301	Concrete Slope Paving Under Bridges	Sept. 26, 2003	05-25-2016
5-397.302	Stabilized Aggregate Slope Paving Under Bridges	Sept. 26, 2003	09-11-2014

5-397.309	Riprap Slope With Geotextile Filter (Slopes 1:2 And Flatter)	May 24, 2011	01-05-2017
5-397.402	Conduit System For_____	Sept. 26, 2003	05-24-2012
5-397.406(A)	Conduit System (Lighting) Type F Concrete Barrier Blister, With or Without Wearing Course	Aug 24, 2016	
5-397.406(B)	Conduit System (Lighting) Type S Concrete Barrier Blister, With or Without Wearing Course	Aug 24, 2016	
5-397.504	27" Prestressed Concrete Beam (Pretensioned) 27M-___	Jan. 13, 2015	12-02-2015
5-397.505	36" Prestressed Concrete Beam (Pretensioned) 36M-___	Jan. 13, 2015	12-02-2015
5-397.507	MN45" Prestressed Concrete Beam (Pretensioned) MN45-___	Jan. 13, 2015	12-02-2015
5-397.508	MN54" Prestressed Concrete Beam (Pretensioned) MN54-___	Jan. 13, 2015	12-02-2015
5-397.509	MN63" Prestressed Concrete Beam (Pretensioned) MN63-___	Jan. 13, 2015	12-02-2015
5-397.531	82MW Prestressed Concrete Beam (Pretensioned) 82MW-___	Jan. 13, 2015	12-02-2015
5-397.532	96MW Prestressed Concrete Beam (Pretensioned) 96MW-___	Jan. 13, 2015	12-02-2015
5-397.550	14", 18" & 22" Rectangular Prestressed Concrete Beam (Pretensioned) __" RB-___	Jan. 13, 2015	
5-397.627(A)	Waterproof Expansion Device (With Type F Barrier)	Aug. 24, 2016	01-05-2017
5-397.627(B)	Waterproof Expansion Device (With Type S Barrier)	Aug. 24, 2016	01-05-2017
5-397.628	Waterproof Expansion Device Snow Plow Protection (Use On Skews Over 15° And Less Than 50°)	Sept. 26, 2003	11-06-2013
5-397.630(A)	Waterproof Expansion Device (With Raised Median or Sidewalk with F Barrier and Parapet)	Aug. 24, 2016	
5-397.630(B)	Waterproof Expansion Device (With Raised Median or Sidewalk with S Barrier and Parapet)	Aug. 24, 2016	
5-397.632(A)	Waterproof Expansion Device (Raised Median or Integral Sidewalk with F Barrier and Curb)	Aug. 24, 2016	
5-397.632(B)	Waterproof Expansion Device (Raised Median or Integral Sidewalk with S Barrier and Curb)	Aug. 24, 2016	
5-397.900	As-Built Bridge Data	Sept. 26, 2003	10-28-2008

DESIGN AIDS (Not a Standard)

Mpls.dgn	Ornamental Metal Railing (Type M-2) And Concrete Railing (Type P-3)	04-23-2003

FIGURE N0.	DESCRIPTION	DATE APPROVED	DATE REVISED
5-397.108	Ornamental Metal Railing (Type S) **ARCHIVED 03-14-2000**	Mar. 7, 1975	04-28-1998
5-397.120	Wire Fence (Design W-1) And Concrete Parapet (Type P-1) (With Separate End Post) **ARCHIVED 11-06-2013**	Dec. 18, 2003	04-17-2013
5-397.121	Concrete Railing (Type F-SW) With Bridge Slab Sidewalk And Separate End Post (With Concrete Wearing Course) **ARCHIVED 07-25-2005**	Nov. 26, 1985	03-04-2003
5-397.123	Concrete Railing (Type F-SW) With Bridge Slab Sidewalk And Separate End Post (Without Concrete Wearing Course) **ARCHIVED 07-25-2005**	Nov. 26, 1985	03-04-2003
5-397.146	Treated Timber Bridge Rail **ARCHIVED 03-14-2000**	Dec. 08, 1988	03-04-2003
5-397.150	Metal Railing For Bikeways **ARCHIVED 03-14-2000**	July 22, 1980	02-27-1995
5-397.155	Metal Railing With Type J Base (With Separate End Post) **ARCHIVED 06-07-2005**	No Approval	02-10-1994
5-397.172	C.I.P. Bridge Rail Repair (Separate End Post) **ARCHIVED 03-14-2000**	Feb. 6, 1990	09-17-1998
5-397.173	C.I.P. Bridge Rail Repair (Without End Post) **ARCHIVED 03-14-2000**	No Approval	11-23-1993
5-397.200	Structural Tube Railing (Type T) **ARCHIVED 03-14-2000**		06-06-1994
5-397.201	Chain Link Enclosure For Pedestrian Bridges **ARCHIVED 03-14-2000**	Nov. 26, 1985	06-07-1994
5-397.403	Conduit System (Lighting) Type F (Or Concrete Parapet And Fence Railing) **ARCHIVED 05-24-2011**	Sept. 26, 2003	10-22-2009
5-397.404	Conduit System For Lighting (Solid Median) **ARCHIVED 03-14-2000**	June 27, 1980	09-17-1998
5-397.405	Conduit System For Lighting (Split Median) **ARCHIVED 03-14-2000**	June 27, 1980	09-17-1998
5-397.502	36" Prestressed Concrete Beam (Pretensioned) 36-___ **ARCHIVED 02-07-2002**	Nov. 6, 1995	02-11-2000

FIGURE N0.	DESCRIPTION	DATE APPROVED	DATE REVISED
5-397.503	40" Prestressed Concrete Beam (Pretensioned) 40-___ **ARCHIVED 02-07-2002**	Nov. 6, 1995	02-11-2000
5-397.506	28" Prestressed Concrete Beam (Pretensioned) 28M-___ **ARCHIVED 02-07-2002**	Nov. 6, 1995	02-11-2000
5-397.511	63" Prestressed Concrete Beam (Pretensioned) 63-___ **ARCHIVED 03-06-1997**	Nov. 6, 1995	
5-397.512	72" Prestressed Concrete Beam (Pretensioned) 72-___ **ARCHIVED 03-06-1997**	Nov. 6, 1995	
5-397.513	81" Prestressed Concrete Beam (Pretensioned) 81-___ **ARCHIVED 03-06-1997**	Nov. 6, 1995	
5-397.514	45" Prestressed Concrete Beam (Pretensioned) 45M-___ **ARCHIVED 05-24-2011**	Oct. 26, 2005	10-22-2009
5-397.515	54" Prestressed Concrete Beam (Pretensioned) 54M-___ **ARCHIVED 05-24-2011**	Oct. 26, 2005	10-22-2009
5-397.516	63" Prestressed Concrete Beam (Pretensioned) 63M-___ **ARCHIVED 05-24-2011**	Oct. 26, 2005	10-22-2009
5-397.517	72" Prestressed Concrete Beam (Pretensioned) 72M-___ **ARCHIVED 05-24-2011**	Oct. 26, 2005	10-22-2009
5-397.518	81" Prestressed Concrete Beam (Pretensioned) 81M-___ **ARCHIVED 05-24-2011**	Oct. 26, 2005	10-22-2009
5-397.521	22" Double Prestressed Concrete Tee-Beam Type 22-___ 6' Or 8' Wide Tee With Slab **ARCHIVED 05-05-2003**	June 18, 1979	11-06-2000
5-397.522	30" Double Prestressed Concrete Tee-Beam Type 30-___ 6' Or 8' Wide Tee With Slab **ARCHIVED 05-05-2003**	June 18, 1979	11-06-2000
5-397.525	22" Prestressed Concrete Double Tee Beam Type 22-___ 6' Or 8' Wide Tee Without Slab **ARCHIVED 03-26-2009**	Oct. 29, 2004	
5-397.526	30" Prestressed Concrete Double Tee Beam Type 30-___ 6' Or 8' Wide Tee Without Slab **ARCHIVED 03-26-2009**	Oct. 29, 2004	
5-397.629	Waterproof Expansion Device For Repair Work With Type F Barrier **ARCHIVED 03-14-2000**	No Approval	08-22-2002

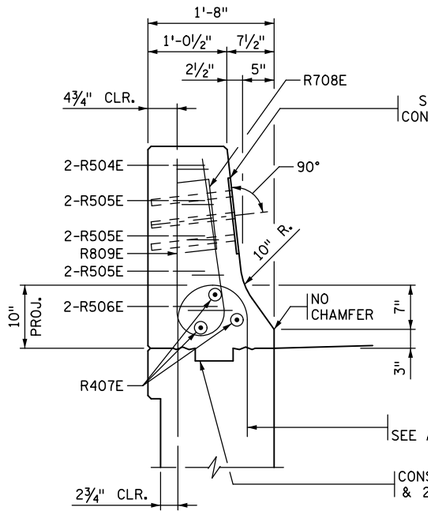

SECTION A-A

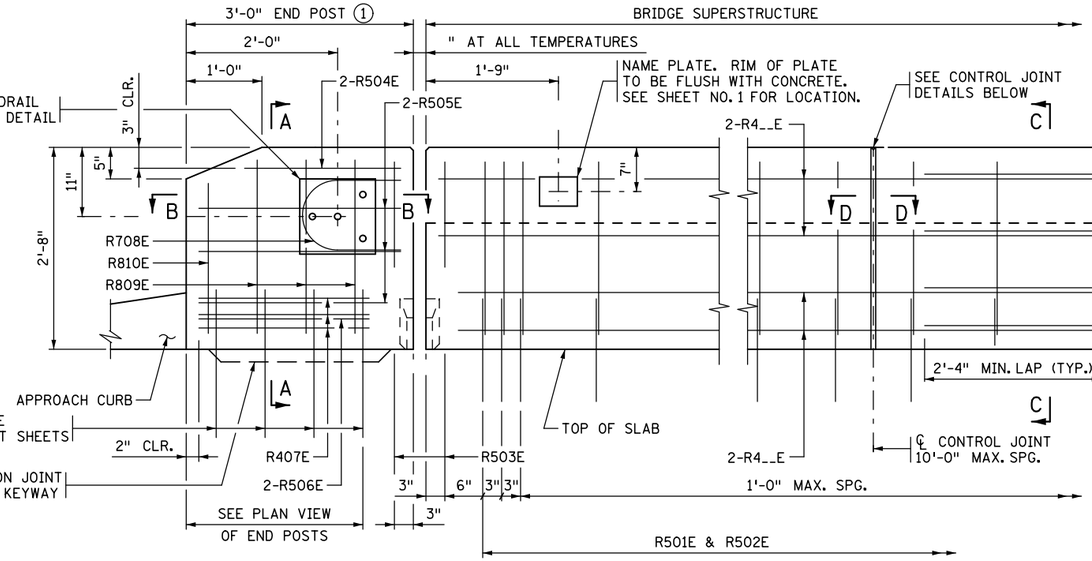

EXPANSION JOINT

(EXPANSION DEVICE NOT SHOWN)

CONTROL JOINT

INSIDE ELEVATION OF BARRIER

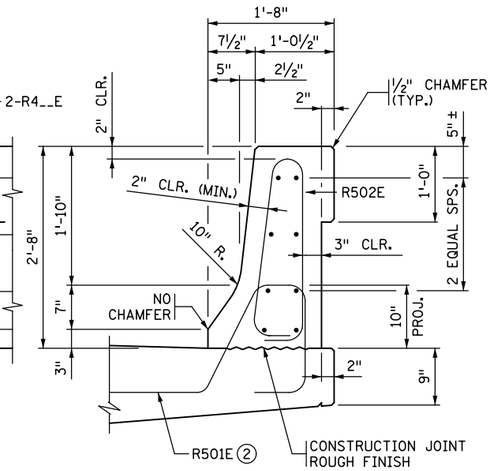

SECTION C-C

BILL OF REINFORCEMENT FOR BARRIER				
BAR	NO.	LENGTH	SHAPE	LOCATION
R501E		5'-7"		BARRIER DOWEL
R502E		6'-2"		BARRIER VERTICAL
R503E		4'-4"		BARRIER VERTICAL
R504E		2'-8"		END POST
R505E		3'-6"		END POST
R506E		3'-4"		END POST
R407E		2'-3"		END POST
R708E		4'-1"		END POST
R809E		5'-0"		END POST
R810E		4'-5"		END POST
R4__E				BARRIER LONGIT.
R4__E				BARRIER LONGIT.
R4__E				BARRIER LONGIT.
R4__E				BARRIER LONGIT.
R4__E				BARRIER LONGIT.

DESIGNER NOTE
(REMOVE PRIOR TO PLOTTING FINAL PLAN):
FOR BRIDGES WITH SUPERELEVATION EXCEEDING 2%, SHOW DIMENSIONS FOR BOTH THE FRONT AND BACK FACE OF THE BARRIER. ALSO VERIFY THAT BAR R501E HAS 10" MIN. PROJECTION WHEN CROSS SLOPE VARIES FROM NORMAL 0.02 FT/FT

BARRIER MEETS TEST LEVEL 4 REQUIREMENTS OF NCHRP REPORT 350

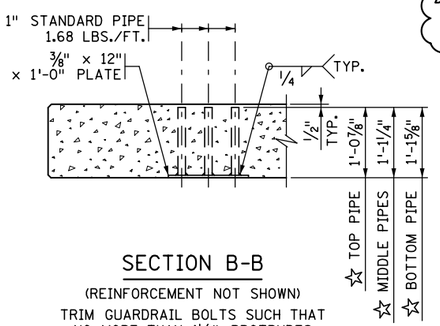

SECTION B-B

(REINFORCEMENT NOT SHOWN)

TRIM GUARDRAIL BOLTS SUCH THAT NO MORE THAN 1½" PROTRUDES FROM BACK FACE OF BARRIER.

☆ DIMENSIONS INCLUDE ⅜" PLATE

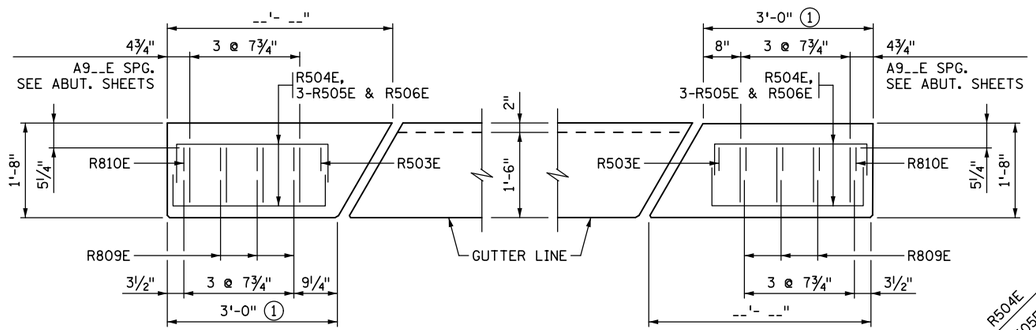

PLAN VIEW OF END POSTS

EXPANSION JOINT (DEVICE NOT SHOWN)

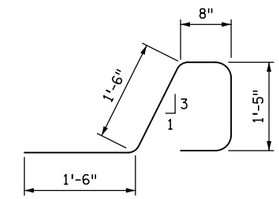

R501E

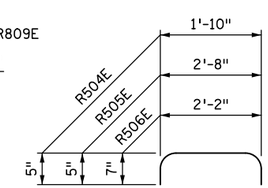

R504E, R505E & R506E

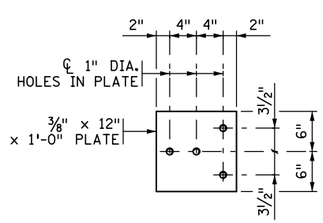

GUARDRAIL CONNECTION DETAIL

GALVANIZE AFTER FABRICATION PER SPEC. 3394
ESTIMATED WEIGHT = 23 LBS

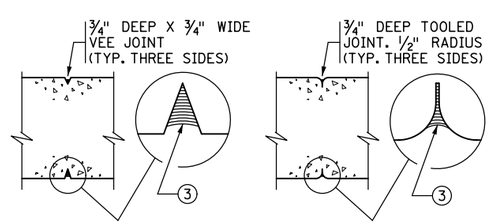

SECTION D-D

CONTRACTOR OPTION 1

SECTION D-D

CONTRACTOR OPTION 2

CONTROL JOINT DETAILS

WHEN USING SLIP FORM METHOD TO PLACE THE CONCRETE, CUT JOINT 3 INCHES DEEP USING MARGIN TROWEL OR SIMILAR MEANS IMMEDIATELY AFTER CONCRETE PLACEMENT (TYP. THREE SIDES)

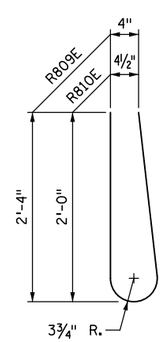

R809E & R810E

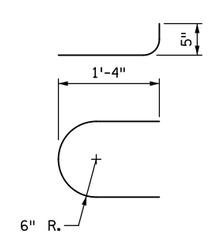

R708E

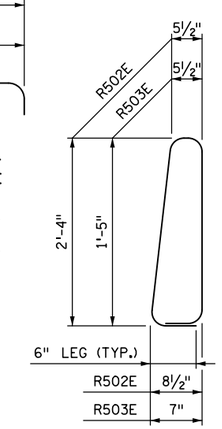

R502E & R503E

GENERAL NOTES

PAYMENT LENGTH SHALL BE MEASURED BETWEEN THE OUTSIDE FACES OF THE BARRIER.

CONCRETE BARRIER = 464 LBS./FT. (0.115 CU. YDS./FT.)

FINISH ALL EDGES OF BARRIER AND END POST WITH ½" CHAMFER, EXCEPT WHERE OTHERWISE NOTED.

MAXIMUM SPACING OF CONTROL JOINTS SHALL BE 10 FT. SEE SUPERSTRUCTURE SHEET FOR JOINT SPACING.

GUARDRAIL CONNECTION TO BE STRUCTURAL STEEL, SPEC. 3306.

GUARDRAIL CONNECTION AND NAME PLATE TO BE CONSIDERED INCIDENTAL TO BARRIER.

BARRIER QUANTITIES ARE LISTED IN SUMMARY OF QUANTITIES FOR SUPERSTRUCTURE.

① END POST DIMENSIONS ARE ALONG GUTTER LINE OR OUTSIDE FACE OF END POST.

② PLACE BAR ON TOP OF BOTTOM REINFORCEMENT MAT.

③ JOINT SEALANT PER MnDOT APPROVED/QUALIFIED PRODUCTS LIST - CRACK AND JOINT MATERIALS - SILICONE JOINT SEALERS.

REVISION: 11-03-2015

APPROVED: NOVEMBER 6, 2013

Nancy Daubenberger
STATE BRIDGE ENGINEER

CERTIFIED BY _____ LICENSED PROFESSIONAL ENGINEER _____ DATE

NAME: LIC. NO.

TITLE: CONCRETE BARRIER (TYPE F, TL-4)
WITH SEPARATE END POST
(WITHOUT CONCRETE WEARING COURSE)

DES: DR: APPROVED:
CHK: CHK:

SHEET NO. OF SHEETS

FIG. 5-397.114

BRIDGE NO.

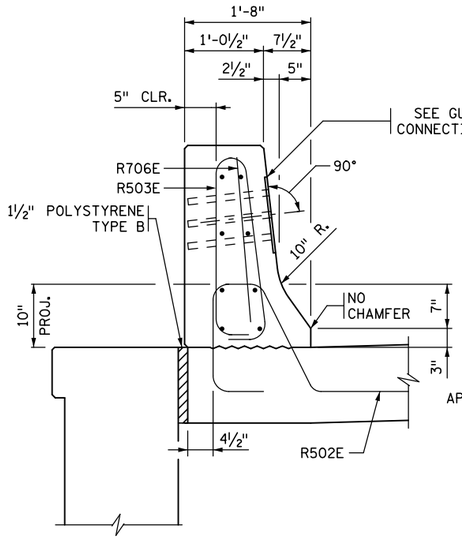

SECTION A-A

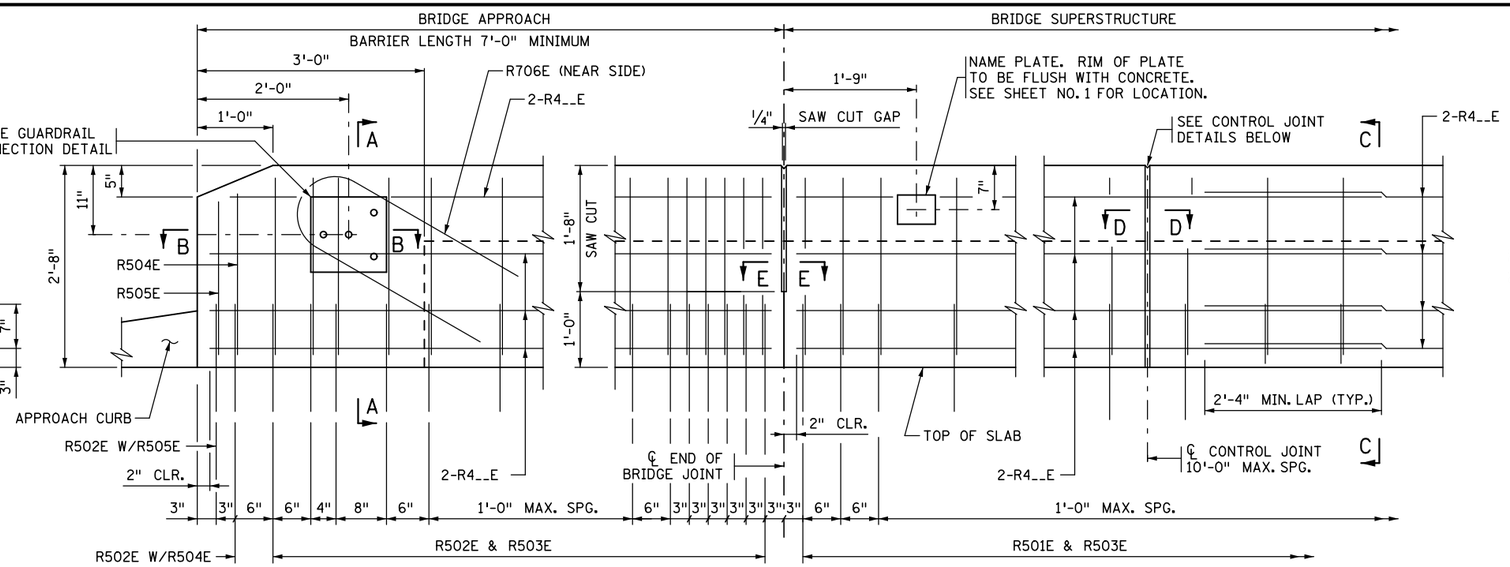

JOINT AT ABUTMENT

CONTROL JOINT

INSIDE ELEVATION OF BARRIER

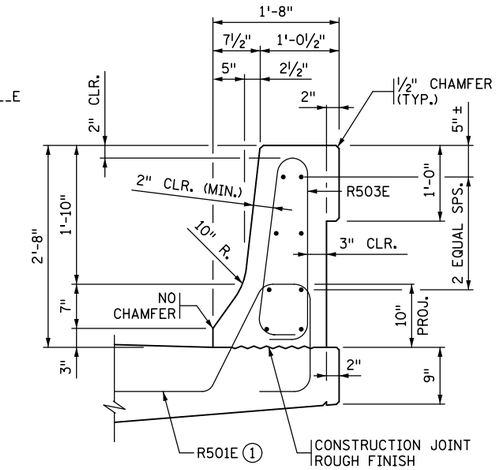

SECTION C-C

DESIGNER NOTE
(REMOVE PRIOR TO PLOTTING FINAL PLANS):
FOR BRIDGES WITH SUPERELEVATION EXCEEDING 2%, SHOW THE BARRIER FRONT FACE DIMENSIONS AS INDICATED ON THIS SHEET, AND ALSO CALCULATE AND SHOW THE BARRIER BACK FACE DIMENSIONS. ALSO VERIFY THAT BAR R501E HAS 10" MIN. PROJECTION WHEN CROSS SLOPE VARIES FROM NORMAL 0.02 FT/FT

BARRIER MEETS TEST LEVEL 4 REQUIREMENTS OF NCHRP REPORT 350

BILL OF REINFORCEMENT FOR BARRIER				
BAR	NO.	LENGTH	SHAPE	LOCATION
R501E		5'-7"		BARRIER DOWEL
R502E		5'-9"		BARRIER DOWEL
R503E		6'-2"		BARRIER VERTICAL
R504E		5'-8"		BARRIER VERTICAL
R505E		5'-6"		BARRIER VERTICAL
R706E		6'-6"		BARRIER VERTICAL
R4__E				BARRIER LONGIT.
R4__E				BARRIER LONGIT.
R4__E				BARRIER LONGIT.
R4__E				BARRIER LONGIT.
R4__E				BARRIER LONGIT.
R4__E				BARRIER LONGIT.

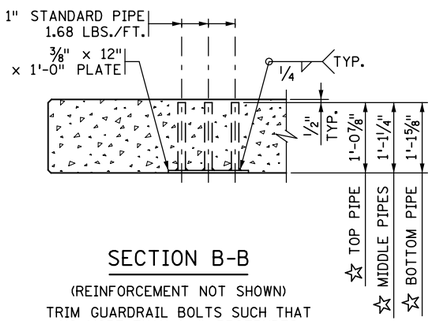

SECTION B-B

(REINFORCEMENT NOT SHOWN)

TRIM GUARDRAIL BOLTS SUCH THAT NO MORE THAN 1½" PROTRUDES FROM BACK FACE OF BARRIER.

☆ DIMENSIONS INCLUDE ⅜" PLATE

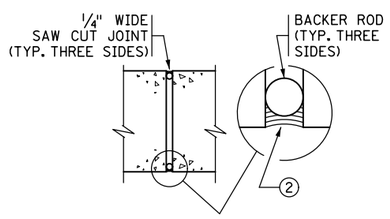

SECTION E-E

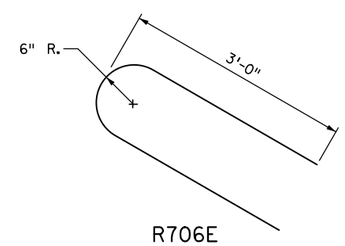

R706E

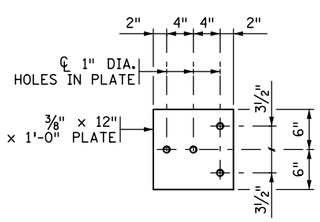

GUARDRAIL CONNECTION DETAIL

GALVANIZE AFTER FABRICATION PER SPEC. 3394
ESTIMATED WEIGHT = 23 LBS

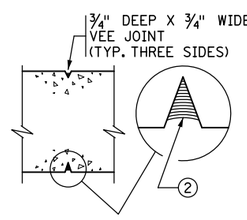

SECTION D-D

CONTRACTOR OPTION 1

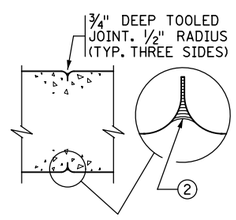

SECTION D-D

CONTRACTOR OPTION 2

CONTROL JOINT DETAILS

WHEN USING SLIP FORM METHOD TO PLACE THE CONCRETE, CUT JOINT 3 INCHES DEEP USING MARGIN TROWEL OR SIMILAR MEANS IMMEDIATELY AFTER CONCRETE PLACEMENT (TYP. THREE SIDES)

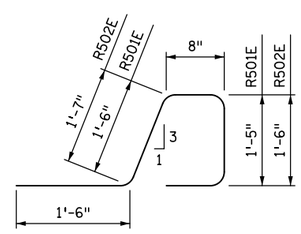

R501E, R502E

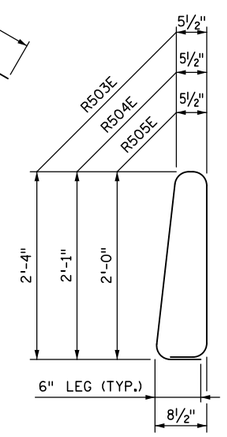

R503E, R504E & R505E

GENERAL NOTES

MEASURE PAYMENT LENGTH BETWEEN THE OUTSIDE FACES OF THE BARRIER.

CONCRETE BARRIER = 464 LBS./FT. (0.115 CU. YDS./FT.)

FINISH ALL EDGES OF BARRIER WITH ½" CHAMFER, EXCEPT WHERE OTHERWISE NOTED.

SPACE CONTROL JOINTS AT 10 FT. MAXIMUM. SEE SUPERSTRUCTURE SHEET FOR JOINT SPACING.

GUARDRAIL CONNECTION TO BE STRUCTURAL STEEL, SPEC. 3306.

GUARDRAIL CONNECTION AND NAME PLATE TO BE CONSIDERED INCIDENTAL TO BARRIER.

BARRIER QUANTITIES ARE LISTED IN SUMMARY OF QUANTITIES FOR SUPERSTRUCTURE.

① PLACE BAR ON TOP OF BOTTOM REINFORCEMENT MAT.

② JOINT SEALANT PER MnDOT APPROVED/QUALIFIED PRODUCTS LIST - CRACK AND JOINT MATERIALS - SILICONE JOINT SEALERS.

REVISION:

APPROVED: JANUARY 13, 2015
Nancy Daubenberger
STATE BRIDGE ENGINEER

CERTIFIED BY _____ LICENSED PROFESSIONAL ENGINEER _____ DATE
NAME: LIC. NO.

TITLE: CONCRETE BARRIER (TYPE F, TL-4)
INTEGRAL OR SEMI-INTEGRAL ABUTMENT WITH INTEGRAL END POST (WITHOUT CONCRETE WEARING COURSE)

DES: DR: CHK: CHK:

SHEET NO. OF SHEETS

FIG. 5-397.115(A)

APPROVED:

BRIDGE NO.

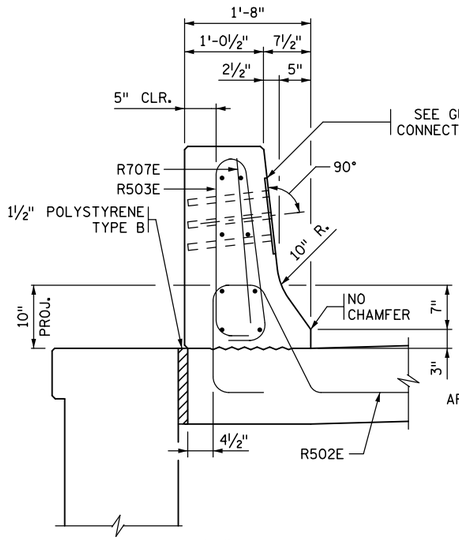

SECTION A-A

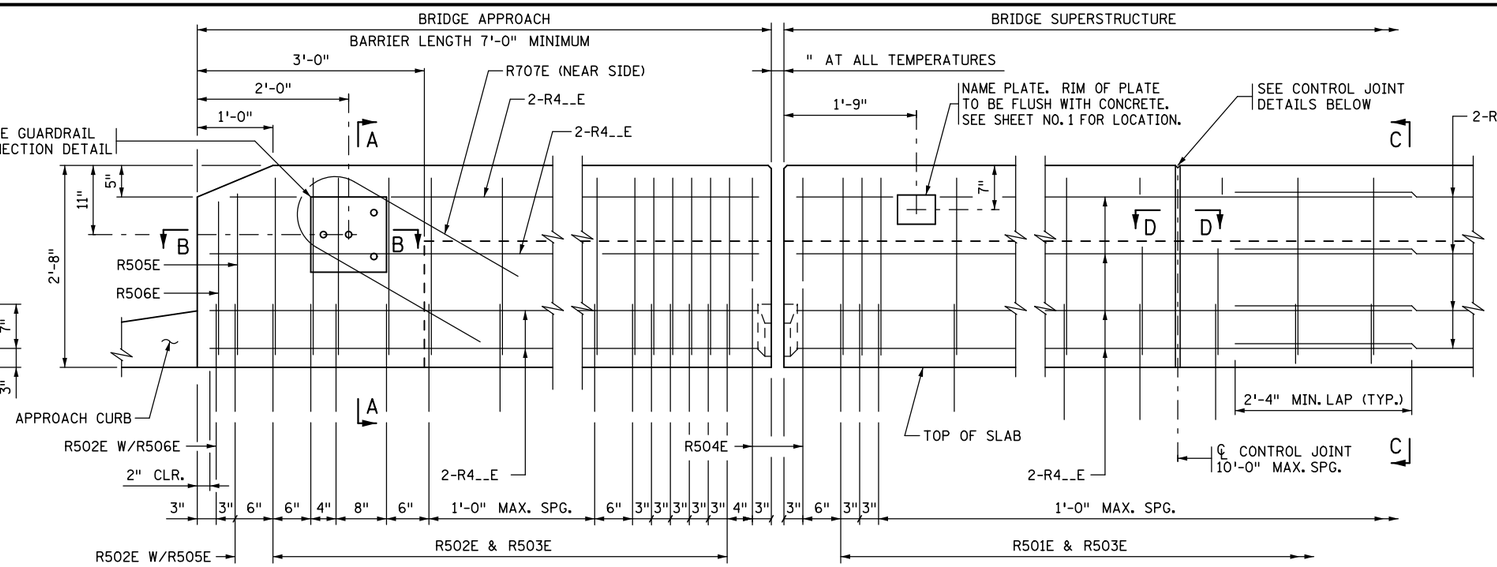

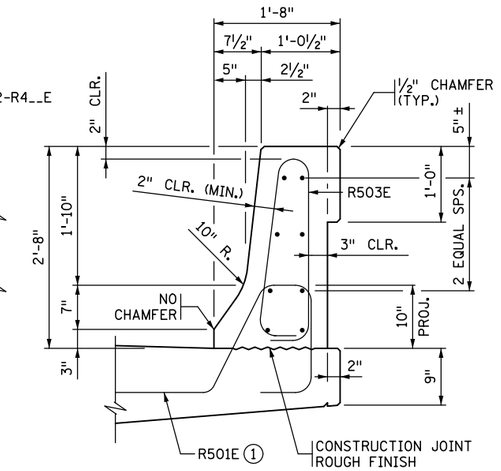

SECTION C-C

DESIGNER NOTE
(REMOVE PRIOR TO PLOTTING FINAL PLANS):
FOR BRIDGES WITH SUPERELEVATION EXCEEDING 2%, SHOW THE BARRIER FRONT FACE DIMENSIONS AS INDICATED ON THIS SHEET, AND ALSO CALCULATE AND SHOW THE BARRIER BACK FACE DIMENSIONS. ALSO VERIFY THAT BAR R501E HAS 10" MIN. PROJECTION WHEN CROSS SLOPE VARIES FROM NORMAL 0.02 FT/FT

EXPANSION JOINT

EXPANSION JOINT NOT SHOWN

CONTROL JOINT

INSIDE ELEVATION OF BARRIER

CONCRETE WEARING COURSE NOT SHOWN
(7'-0" BARRIER ON APPROACH SHOWN)

BARRIER MEETS TEST LEVEL 4 REQUIREMENTS OF NCHRP REPORT 350

BILL OF REINFORCEMENT FOR BARRIER				
BAR	NO.	LENGTH	SHAPE	LOCATION
R501E		5'-7"		BARRIER DOWEL
R502E		5'-9"		BARRIER DOWEL
R503E		6'-2"		BARRIER VERTICAL
R504E		4'-4"		BARRIER VERTICAL
R505E		5'-8"		BARRIER VERTICAL
R506E		5'-6"		BARRIER VERTICAL
R707E		6'-6"		BARRIER VERTICAL
R4__E				BARRIER LONGIT.
R4__E				BARRIER LONGIT.
R4__E				BARRIER LONGIT.
R4__E				BARRIER LONGIT.
R4__E				BARRIER LONGIT.
R4__E				BARRIER LONGIT.

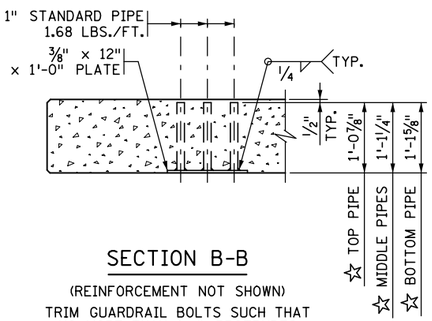

SECTION B-B

(REINFORCEMENT NOT SHOWN)

TRIM GUARDRAIL BOLTS SUCH THAT NO MORE THAN 1½" PROTRUDES FROM BACK FACE OF BARRIER.

☆ DIMENSIONS INCLUDE ⅜" PLATE

R707E

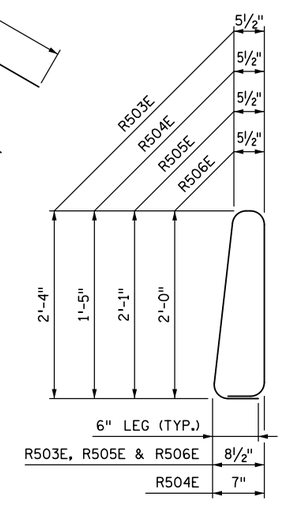

R503E, R504E, R505E & R506E

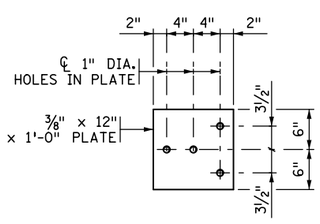

GUARDRAIL CONNECTION DETAIL

GALVANIZE AFTER FABRICATION PER SPEC. 3394
ESTIMATED WEIGHT = 23 LBS

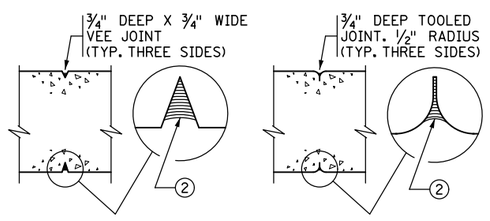

SECTION D-D
CONTRACTOR OPTION 1

SECTION D-D
CONTRACTOR OPTION 2

CONTROL JOINT DETAILS

WHEN USING SLIP FORM METHOD TO PLACE THE CONCRETE, CUT JOINT 3 INCHES DEEP USING MARGIN TROWEL OR SIMILAR MEANS IMMEDIATELY AFTER CONCRETE PLACEMENT (TYP. THREE SIDES)

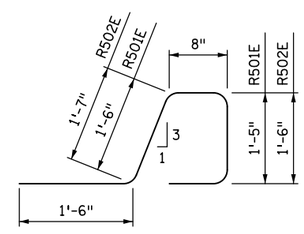

R501E, R502E

GENERAL NOTES

MEASURE PAYMENT LENGTH BETWEEN THE OUTSIDE FACES OF THE BARRIER.

CONCRETE BARRIER = 464 LBS./FT. (0.115 CU. YDS./FT.)

FINISH ALL EDGES OF BARRIER WITH ½" CHAMFER, EXCEPT WHERE OTHERWISE NOTED.

SPACE CONTROL JOINTS AT 10 FT. MAXIMUM. SEE SUPERSTRUCTURE SHEET FOR JOINT SPACING.

GUARDRAIL CONNECTION TO BE STRUCTURAL STEEL, SPEC. 3306.

GUARDRAIL CONNECTION AND NAME PLATE TO BE CONSIDERED INCIDENTAL TO BARRIER.

BARRIER QUANTITIES ARE LISTED IN SUMMARY OF QUANTITIES FOR SUPERSTRUCTURE.

① PLACE BAR ON TOP OF BOTTOM REINFORCEMENT MAT.

② JOINT SEALANT PER MnDOT APPROVED/QUALIFIED PRODUCTS LIST - CRACK AND JOINT MATERIALS - SILICONE JOINT SEALERS.

REVISION:

APPROVED: JANUARY 13, 2015
Nancy Daubenberger
STATE BRIDGE ENGINEER

CERTIFIED BY _____ LICENSED PROFESSIONAL ENGINEER _____ DATE
NAME: LIC. NO.

TITLE: CONCRETE BARRIER (TYPE F, TL-4)
PARAPET ABUTMENT WITH INTEGRAL END POST (WITHOUT CONCRETE WEARING COURSE)

DES: DR: CHK: CHK:

SHEET NO. OF SHEETS

FIG. 5-397.115(B)

APPROVED:

BRIDGE NO.

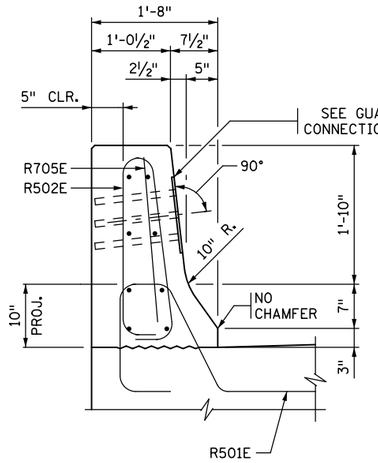

SECTION A-A

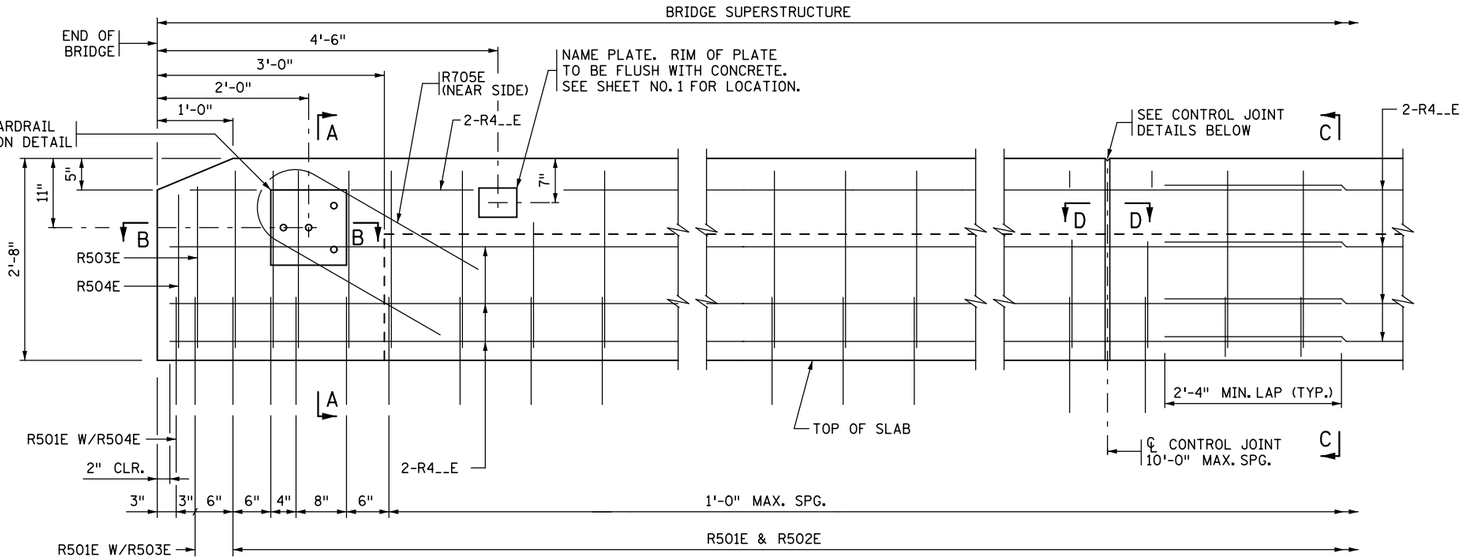

END OF BRIDGE

CONTROL JOINT

INSIDE ELEVATION OF BARRIER

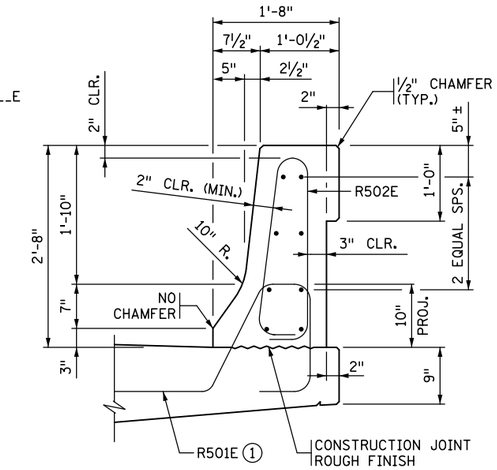

SECTION C-C

DESIGNER NOTE
(REMOVE PRIOR TO PLOTTING FINAL PLANS):
FOR BRIDGES WITH SUPERELEVATION EXCEEDING 2%, SHOW THE BARRIER FRONT FACE DIMENSIONS AS INDICATED ON THIS SHEET, AND ALSO CALCULATE AND SHOW THE BARRIER BACK FACE DIMENSIONS. ALSO VERIFY THAT BAR R501E HAS 10" MIN. PROJECTION WHEN CROSS SLOPE VARIES FROM NORMAL 0.02 FT/FT

BARRIER MEETS TEST LEVEL 4 REQUIREMENTS OF NCHRP REPORT 350

BILL OF REINFORCEMENT FOR BARRIER

BAR	NO.	LENGTH	SHAPE	LOCATION
R501E		5'-7"		BARRIER DOWEL
R502E		6'-2"		BARRIER VERTICAL
R503E		5'-8"		BARRIER VERTICAL
R504E		5'-6"		BARRIER VERTICAL
R705E		6'-6"		BARRIER VERTICAL
R4__E				BARRIER LONGIT.
R4__E				BARRIER LONGIT.
R4__E				BARRIER LONGIT.
R4__E				BARRIER LONGIT.
R4__E				BARRIER LONGIT.
R4__E				BARRIER LONGIT.

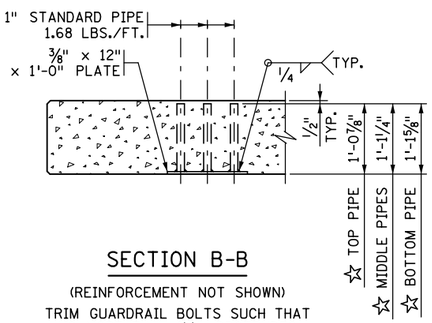

SECTION B-B

(REINFORCEMENT NOT SHOWN)

TRIM GUARDRAIL BOLTS SUCH THAT NO MORE THAN 1½" PROTRUDES FROM BACK FACE OF BARRIER.

☆ DIMENSIONS INCLUDE ⅜" PLATE

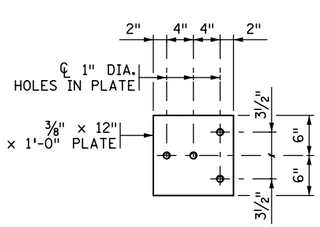

GUARDRAIL CONNECTION DETAIL

GALVANIZE AFTER FABRICATION PER SPEC. 3394
ESTIMATED WEIGHT = 23 LBS

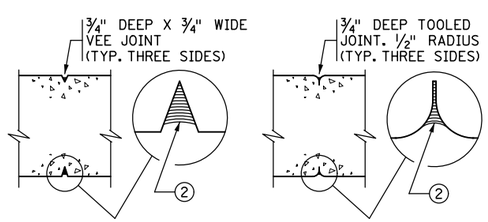

SECTION D-D
CONTRACTOR OPTION 1

SECTION D-D
CONTRACTOR OPTION 2

CONTROL JOINT DETAILS

WHEN USING SLIP FORM METHOD TO PLACE THE CONCRETE, CUT JOINT 3 INCHES DEEP USING MARGIN TROWEL OR SIMILAR MEANS IMMEDIATELY AFTER CONCRETE PLACEMENT (TYP. THREE SIDES)

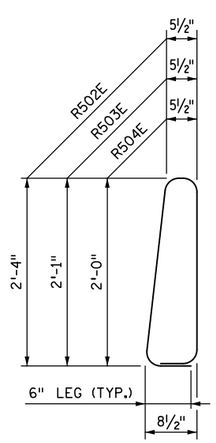

R502E,
R503E & R504E

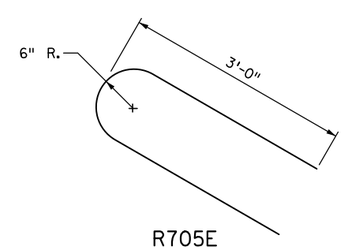

R705E

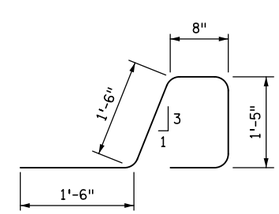

R501E

GENERAL NOTES

MEASURE PAYMENT LENGTH BETWEEN THE OUTSIDE FACES OF THE BARRIER.

CONCRETE BARRIER = 464 LBS./FT. (0.115 CU. YDS./FT.)

FINISH ALL EDGES OF BARRIER WITH ½" CHAMFER, EXCEPT WHERE OTHERWISE NOTED.

SPACE CONTROL JOINTS AT 10 FT. MAXIMUM. SEE SUPERSTRUCTURE SHEET FOR JOINT SPACING.

GUARDRAIL CONNECTION TO BE STRUCTURAL STEEL, SPEC. 3306.

GUARDRAIL CONNECTION AND NAME PLATE TO BE CONSIDERED INCIDENTAL TO BARRIER.

BARRIER QUANTITIES ARE LISTED IN SUMMARY OF QUANTITIES FOR SUPERSTRUCTURE.

① PLACE BAR ON TOP OF BOTTOM REINFORCEMENT MAT.

② JOINT SEALANT PER MnDOT APPROVED/QUALIFIED PRODUCTS LIST - CRACK AND JOINT MATERIALS - SILICONE JOINT SEALERS.

REVISION:

APPROVED: JANUARY 13, 2015
Nancy Daubenberger
STATE BRIDGE ENGINEER

CERTIFIED BY _____ LICENSED PROFESSIONAL ENGINEER _____ DATE
NAME: LIC. NO.

TITLE: CONCRETE BARRIER (TYPE F, TL-4)
INTEGRAL OR SEMI-INTEGRAL ABUTMENT WITH INTEGRAL END POST (WITHOUT CONCRETE WEARING COURSE) NO APPROACH PANEL

DES: DR: CHK: CHK:

SHEET NO. OF SHEETS

FIG. 5-397.115(C)

APPROVED:

BRIDGE NO.

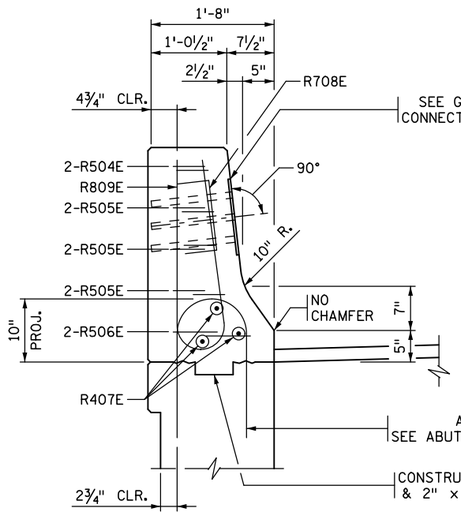

SECTION A-A

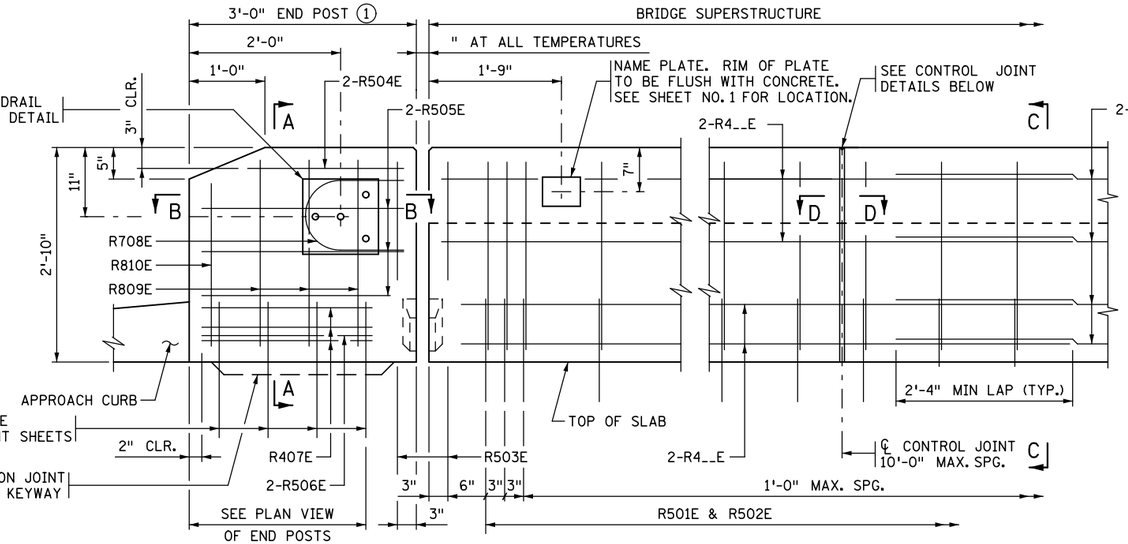

EXPANSION JOINT

(EXPANSION DEVICE NOT SHOWN)

CONTROL JOINT

INSIDE ELEVATION OF BARRIER

(CONCRETE WEARING COURSE NOT SHOWN)

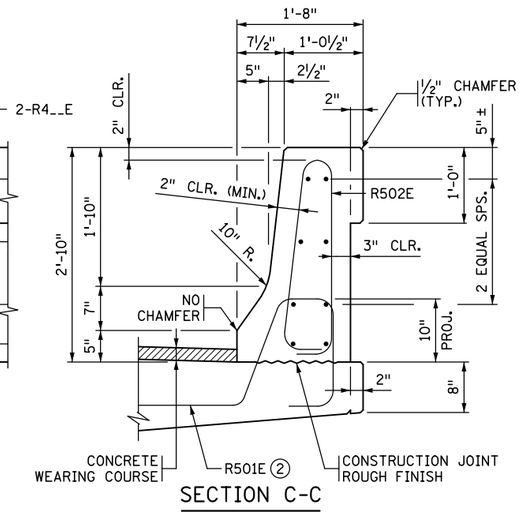

SECTION C-C

DESIGNER NOTE
(REMOVE PRIOR TO PLOTTING FINAL PLAN):
FOR BRIDGES WITH SUPERELEVATION EXCEEDING 2%, SHOW DIMENSIONS FOR BOTH THE FRONT AND BACK FACE OF THE BARRIER. ALSO VERIFY THAT BAR R501E HAS 10" MIN. PROJECTION WHEN CROSS SLOPE VARIES FROM NORMAL 0.02 FT/FT

BARRIER MEETS TEST LEVEL 4 REQUIREMENTS OF NCHRP REPORT 350

BILL OF REINFORCEMENT FOR BARRIER

BAR	NO.	LENGTH	SHAPE	LOCATION
R501E		5'-3"		BARRIER DOWEL
R502E		6'-6"		BARRIER VERTICAL
R503E		4'-8"		BARRIER VERTICAL
R504E		2'-8"		END POST
R505E		3'-6"		END POST
R506E		3'-4"		END POST
R407E		2'-3"		END POST
R708E		4'-1"		END POST
R809E		5'-4"		END POST
R810E		4'-9"		END POST
R4__E				BARRIER LONGIT.
R4__E				BARRIER LONGIT.
R4__E				BARRIER LONGIT.
R4__E				BARRIER LONGIT.
R4__E				BARRIER LONGIT.

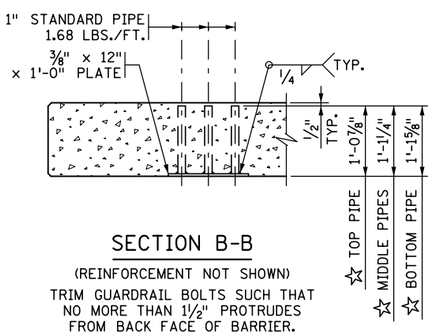

SECTION B-B

(REINFORCEMENT NOT SHOWN)

TRIM GUARDRAIL BOLTS SUCH THAT NO MORE THAN 1½" PROTRUDES FROM BACK FACE OF BARRIER.

☆ DIMENSIONS INCLUDE ⅜" PLATE

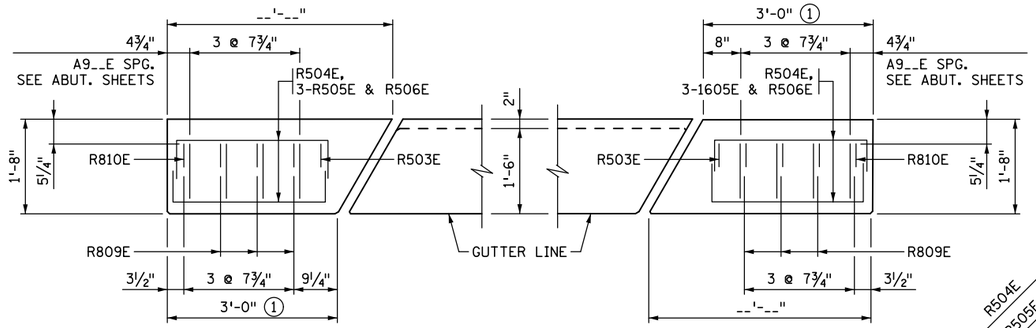

PLAN VIEW OF END POSTS

EXPANSION JOINT (DEVICE NOT SHOWN)

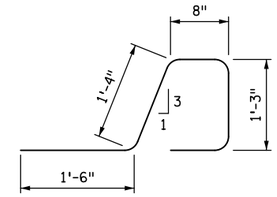

R501E

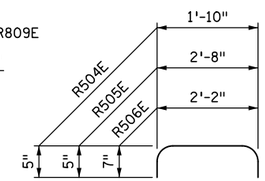

R504E, R505E & R506E

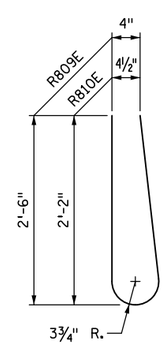

R809E & R810E

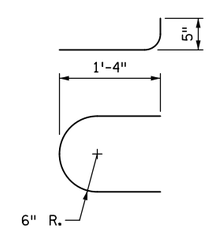

R708E

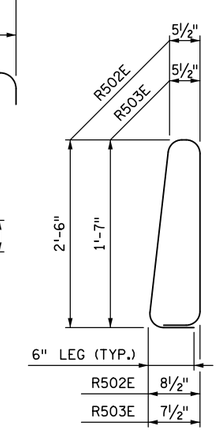

R502E & R503E

GENERAL NOTES

PAYMENT LENGTH SHALL BE MEASURED BETWEEN THE OUTSIDE FACES OF THE BARRIER.

CONCRETE BARRIER = 502 LBS./FT. (0.124 CU. YDS./FT.)

FINISH ALL EDGES OF BARRIER AND END POST WITH ½" CHAMFER, EXCEPT WHERE OTHERWISE NOTED.

MAXIMUM SPACING OF CONTROL JOINTS SHALL BE 10 FT. SEE SUPERSTRUCTURE SHEET FOR JOINT SPACING.

GUARDRAIL CONNECTION TO BE STRUCTURAL STEEL, SPEC. 3306.

GUARDRAIL CONNECTION AND NAME PLATE TO BE CONSIDERED INCIDENTAL TO BARRIER.

BARRIER QUANTITIES ARE LISTED IN SUMMARY OF QUANTITIES FOR SUPERSTRUCTURE.

① END POST DIMENSIONS ARE ALONG GUTTER LINE OR OUTSIDE FACE OF END POST.

② PLACE BAR ON TOP OF BOTTOM REINFORCEMENT MAT.

③ JOINT SEALANT PER MnDOT APPROVED/QUALIFIED PRODUCTS LIST - CRACK AND JOINT MATERIALS - SILICONE JOINT SEALERS.

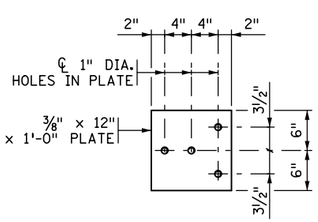

GUARDRAIL CONNECTION DETAIL

GALVANIZE AFTER FABRICATION PER SPEC. 3394
ESTIMATED WEIGHT = 23 LBS

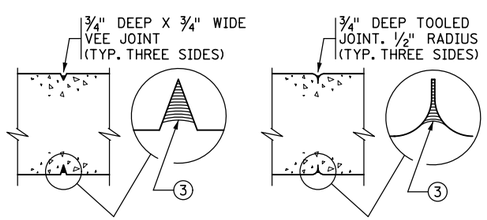

SECTION D-D
CONTRACTOR OPTION 1

SECTION D-D
CONTRACTOR OPTION 2

CONTROL JOINT DETAILS

WHEN USING SLIP FORM METHOD TO PLACE THE CONCRETE, CUT JOINT 3 INCHES DEEP USING MARGIN TROWEL OR SIMILAR MEANS IMMEDIATELY AFTER CONCRETE PLACEMENT (TYP. THREE SIDES)

REVISION: 11-03-2015

APPROVED: NOVEMBER 6, 2013
Nancy Daubenberger
STATE BRIDGE ENGINEER

REVISION DATE: 08-13-2015

CERTIFIED BY _____ LICENSED PROFESSIONAL ENGINEER _____ DATE
NAME: LIC. NO.

TITLE: CONCRETE BARRIER (TYPE F, TL-4)
WITH SEPARATE END POST
(WITH CONCRETE WEARING COURSE)

DES: DR: CHK: CHK:
SHEET NO. OF SHEETS

APPROVED:

FIG. 5-397.116

BRIDGE NO.

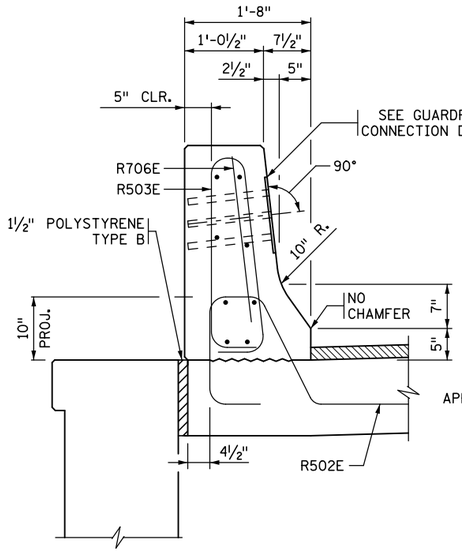

SECTION A-A

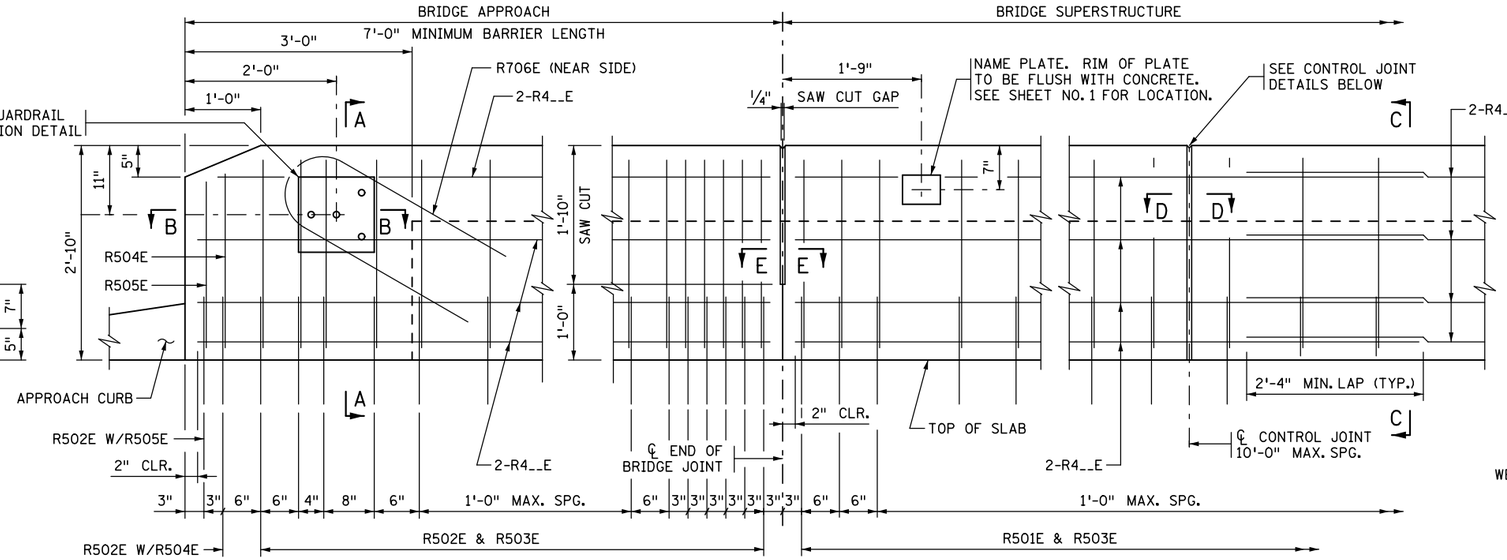

JOINT AT ABUTMENT

INSIDE ELEVATION OF BARRIER

(CONCRETE WEARING COURSE NOT SHOWN)

CONTROL JOINT

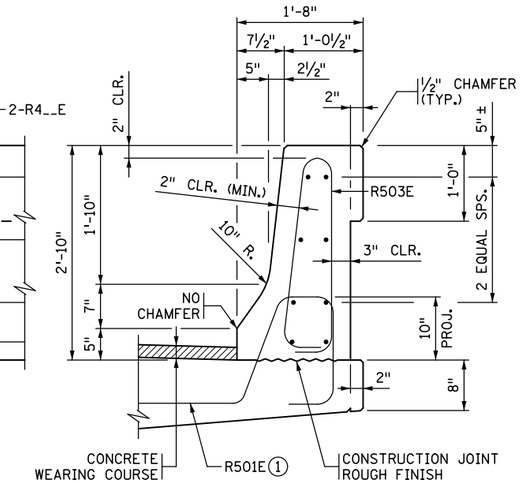

SECTION C-C

DESIGNER NOTE
(REMOVE PRIOR TO PLOTTING FINAL PLANS):
FOR BRIDGES WITH SUPERELEVATION EXCEEDING 2%, SHOW THE BARRIER FRONT FACE DIMENSIONS AS INDICATED ON THIS SHEET, AND ALSO CALCULATE AND SHOW THE BARRIER BACK FACE DIMENSIONS. ALSO VERIFY THAT BAR R501E HAS 10" MIN. PROJECTION WHEN CROSS SLOPE VARIES FROM NORMAL 0.02 FT/FT

BARRIER MEETS TEST LEVEL 4 REQUIREMENTS OF NCHRP REPORT 350

BILL OF REINFORCEMENT FOR BARRIER

BAR	NO.	LENGTH	SHAPE	LOCATION
R501E		5'-3"		BARRIER DOWEL
R502E		5'-5"		BARRIER DOWEL
R503E		6'-6"		BARRIER VERTICAL
R504E		6'-0"		BARRIER VERTICAL
R505E		5'-10"		BARRIER VERTICAL
R706E		6'-6"		BARRIER VERTICAL
R4__E				BARRIER LONGIT.
R4__E				BARRIER LONGIT.
R4__E				BARRIER LONGIT.
R4__E				BARRIER LONGIT.
R4__E				BARRIER LONGIT.
R4__E				BARRIER LONGIT.

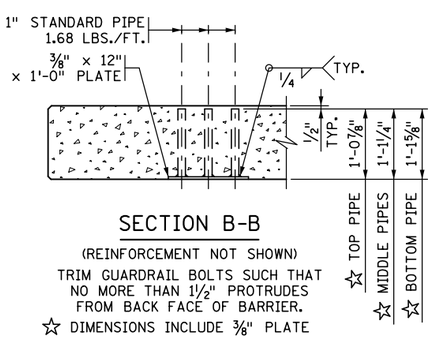

SECTION B-B

(REINFORCEMENT NOT SHOWN)

TRIM GUARDRAIL BOLTS SUCH THAT NO MORE THAN 1½" PROTRUDES FROM BACK FACE OF BARRIER.

☆ DIMENSIONS INCLUDE ⅜" PLATE

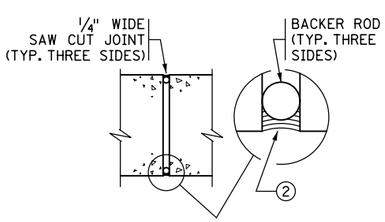

SECTION E-E

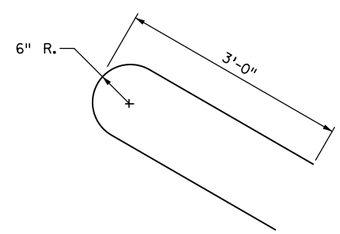

R706E

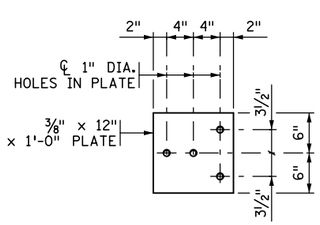

GUARDRAIL CONNECTION DETAIL

GALVANIZE AFTER FABRICATION PER SPEC. 3394
ESTIMATED WEIGHT = 23 LBS

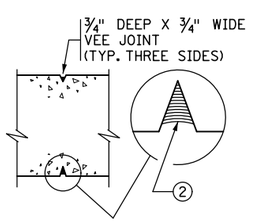

SECTION D-D

CONTRACTOR OPTION 1

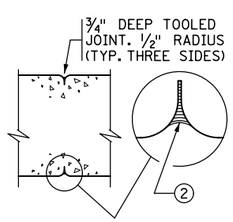

SECTION D-D

CONTRACTOR OPTION 2

CONTROL JOINT DETAILS

WHEN USING SLIP FORM METHOD TO PLACE THE CONCRETE, CUT JOINT 3 INCHES DEEP USING MARGIN TROWEL OR SIMILAR MEANS IMMEDIATELY AFTER CONCRETE PLACEMENT (TYP. THREE SIDES)

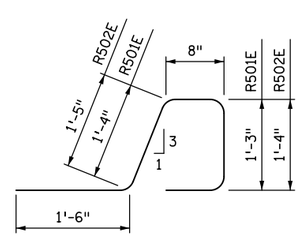

R501E, R502E

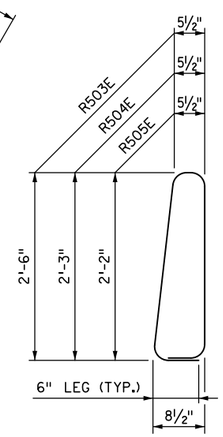

R503E, R504E & R505E

GENERAL NOTES

MEASURE PAYMENT LENGTH BETWEEN THE OUTSIDE FACES OF THE BARRIER.

CONCRETE BARRIER = 502 LBS./FT. (0.124 CU. YDS./FT.)

FINISH ALL EDGES OF BARRIER AND END POST WITH ½" CHAMFER, EXCEPT WHERE OTHERWISE NOTED.

SPACE OF CONTROL JOINTS AT 10 FT. MAXIMUM. SEE SUPERSTRUCTURE SHEET FOR JOINT SPACING.

GUARDRAIL CONNECTION TO BE STRUCTURAL STEEL, SPEC. 3306.

GUARDRAIL CONNECTION AND NAME PLATE TO BE CONSIDERED INCIDENTAL TO BARRIER.

BARRIER QUANTITIES ARE LISTED IN SUMMARY OF QUANTITIES FOR SUPERSTRUCTURE.

① PLACE BAR ON TOP OF BOTTOM REINFORCEMENT MAT.

② JOINT SEALANT PER MnDOT APPROVED/QUALIFIED PRODUCTS LIST - CRACK AND JOINT MATERIALS - SILICONE JOINT SEALERS.

REVISION: 11-03-2015

APPROVED: JANUARY 13, 2015
Nancy Daubenberger
STATE BRIDGE ENGINEER

CERTIFIED BY _____ LICENSED PROFESSIONAL ENGINEER _____ DATE
NAME: LIC. NO.

TITLE: CONCRETE BARRIER (TYPE F, TL-4)
INTEGRAL OR SEMI-INTEGRAL ABUTMENT WITH INTEGRAL END POST (WITH CONCRETE WEARING COURSE)

DES: DR: CHK: CHK:

SHEET NO. OF SHEETS

FIG. 5-397.117(A)

APPROVED:

BRIDGE NO.

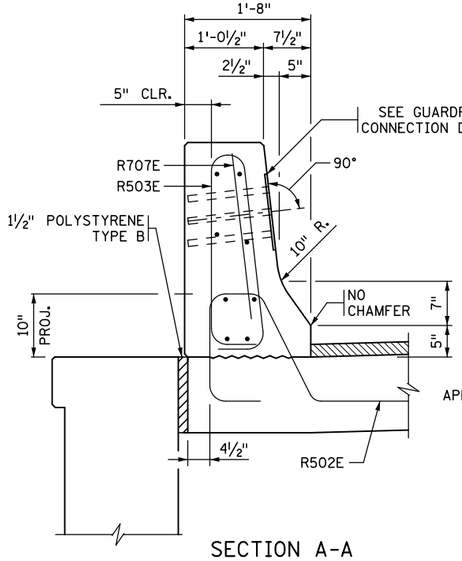

SECTION A-A

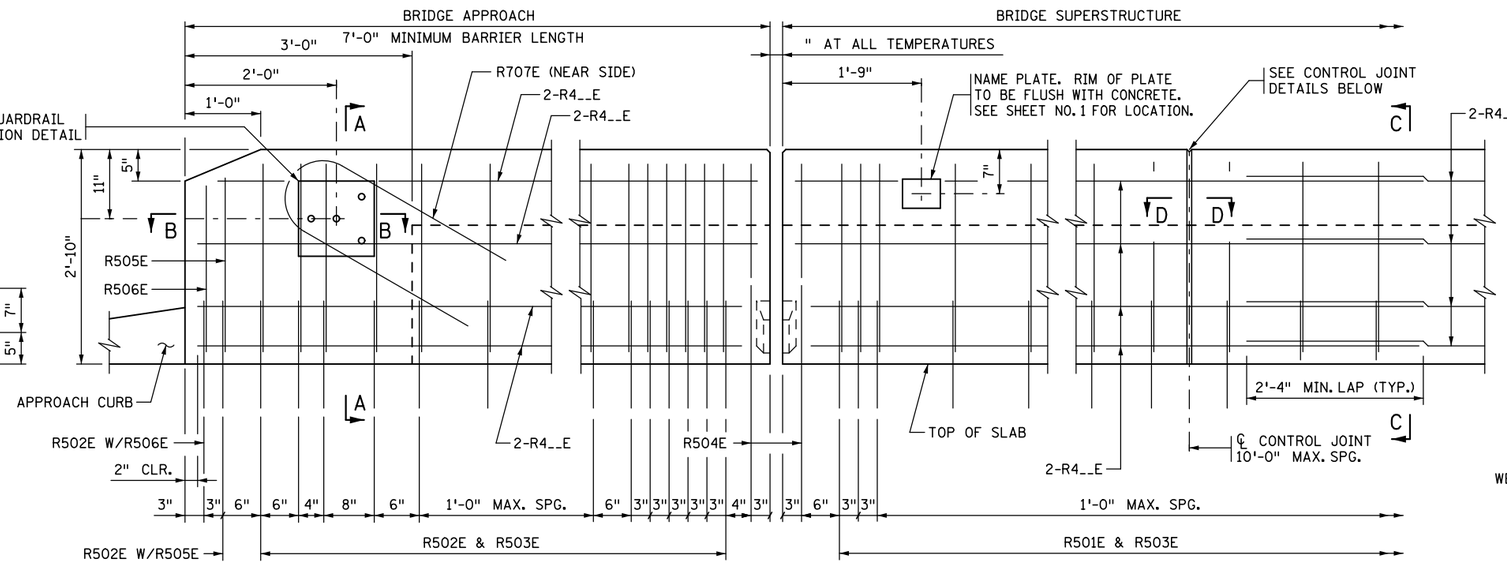

EXPANSION JOINT

EXPANSION JOINT NOT SHOWN

CONTROL JOINT

INSIDE ELEVATION OF BARRIER

CONCRETE WEARING COURSE NOT SHOWN
(7'-0" BARRIER ON APPROACH SHOWN)

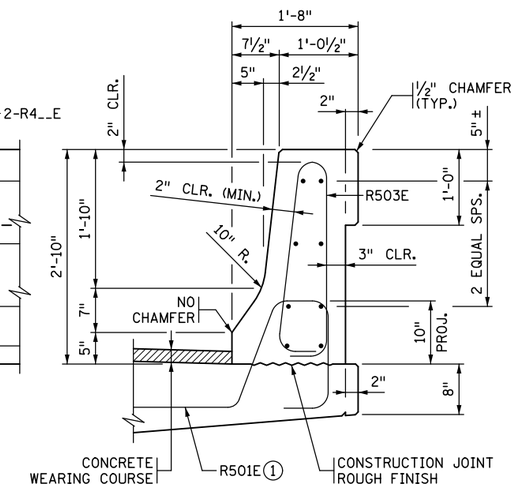

SECTION C-C

DESIGNER NOTE
(REMOVE PRIOR TO PLOTTING FINAL PLANS):
FOR BRIDGES WITH SUPERELEVATION EXCEEDING 2%, SHOW THE BARRIER FRONT FACE DIMENSIONS AS INDICATED ON THIS SHEET, AND ALSO CALCULATE AND SHOW THE BARRIER BACK FACE DIMENSIONS. ALSO VERIFY THAT BAR R501E HAS 10" MIN. PROJECTION WHEN CROSS SLOPE VARIES FROM NORMAL 0.02 FT/FT.

BARRIER MEETS TEST LEVEL 4 REQUIREMENTS OF NCHRP REPORT 350

BILL OF REINFORCEMENT FOR BARRIER

BAR	NO.	LENGTH	SHAPE	LOCATION
R501E		5'-3"		BARRIER DOWEL
R502E		5'-5"		BARRIER DOWEL
R503E		6'-6"		BARRIER VERTICAL
R504E		4'-8"		BARRIER VERTICAL
R505E		6'-0"		BARRIER VERTICAL
R506E		5'-10"		BARRIER VERTICAL
R707E		6'-6"		BARRIER VERTICAL
R4__E				BARRIER LONGIT.
R4__E				BARRIER LONGIT.
R4__E				BARRIER LONGIT.
R4__E				BARRIER LONGIT.
R4__E				BARRIER LONGIT.

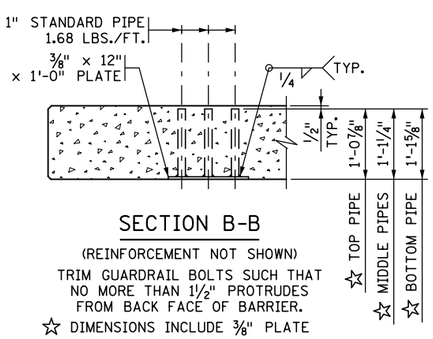

SECTION B-B

(REINFORCEMENT NOT SHOWN)

TRIM GUARDRAIL BOLTS SUCH THAT NO MORE THAN 1½" PROTRUDES FROM BACK FACE OF BARRIER.

☆ DIMENSIONS INCLUDE ⅜" PLATE

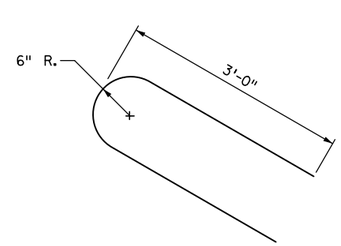

R707E

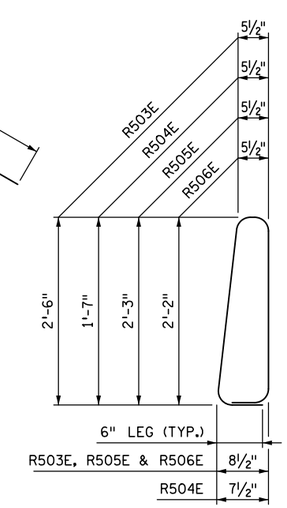

R503E, R504E, R505E & R506E

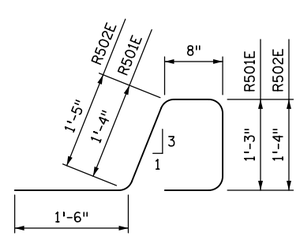

R501E, R502E

GENERAL NOTES

MEASURE PAYMENT LENGTH BETWEEN THE OUTSIDE FACES OF THE BARRIER.

CONCRETE BARRIER = 502 LBS./FT. (0.124 CU. YDS./FT.)

FINISH ALL EDGES OF BARRIER AND END POST WITH ½" CHAMFER, EXCEPT WHERE OTHERWISE NOTED.

SPACE OF CONTROL JOINTS AT BE 10 FT. MAXIMUM. SEE SUPERSTRUCTURE SHEET FOR JOINT SPACING.

GUARDRAIL CONNECTION TO BE STRUCTURAL STEEL, SPEC. 3306.

GUARDRAIL CONNECTION AND NAME PLATE TO BE CONSIDERED INCIDENTAL TO BARRIER.

BARRIER QUANTITIES ARE LISTED IN SUMMARY OF QUANTITIES FOR SUPERSTRUCTURE.

① PLACE BAR ON TOP OF BOTTOM REINFORCEMENT MAT.

② JOINT SEALANT PER MnDOT APPROVED/QUALIFIED PRODUCTS LIST - CRACK AND JOINT MATERIALS - SILICONE JOINT SEALERS.

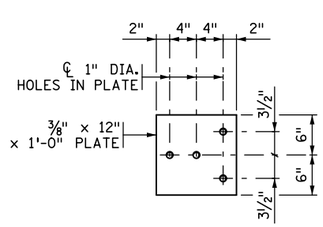

GUARDRAIL CONNECTION DETAIL

GALVANIZE AFTER FABRICATION PER SPEC. 3394
ESTIMATED WEIGHT = 23 LBS

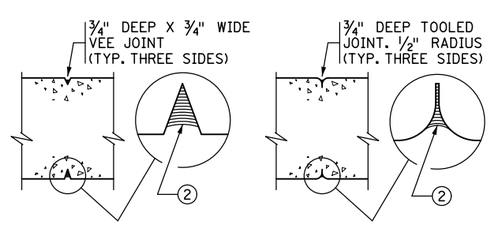

SECTION D-D
CONTRACTOR OPTION 1

SECTION D-D
CONTRACTOR OPTION 2

CONTROL JOINT DETAILS

WHEN USING SLIP FORM METHOD TO PLACE THE CONCRETE, CUT JOINT 3 INCHES DEEP USING MARGIN TROWEL OR SIMILAR MEANS IMMEDIATELY AFTER CONCRETE PLACEMENT (TYP. THREE SIDES)

REVISION:

APPROVED: JANUARY 13, 2015
Nancy Daubenberger
STATE BRIDGE ENGINEER

CERTIFIED BY _____ LICENSED PROFESSIONAL ENGINEER _____ DATE
NAME: LIC. NO.

TITLE: CONCRETE BARRIER (TYPE F, TL-4)
PARAPET ABUTMENT WITH INTEGRAL END POST (WITH CONCRETE WEARING COURSE)

DES: DR:
CHK: CHK:
SHEET NO. OF SHEETS

FIG. 5-397.117(B)

APPROVED:

BRIDGE NO.

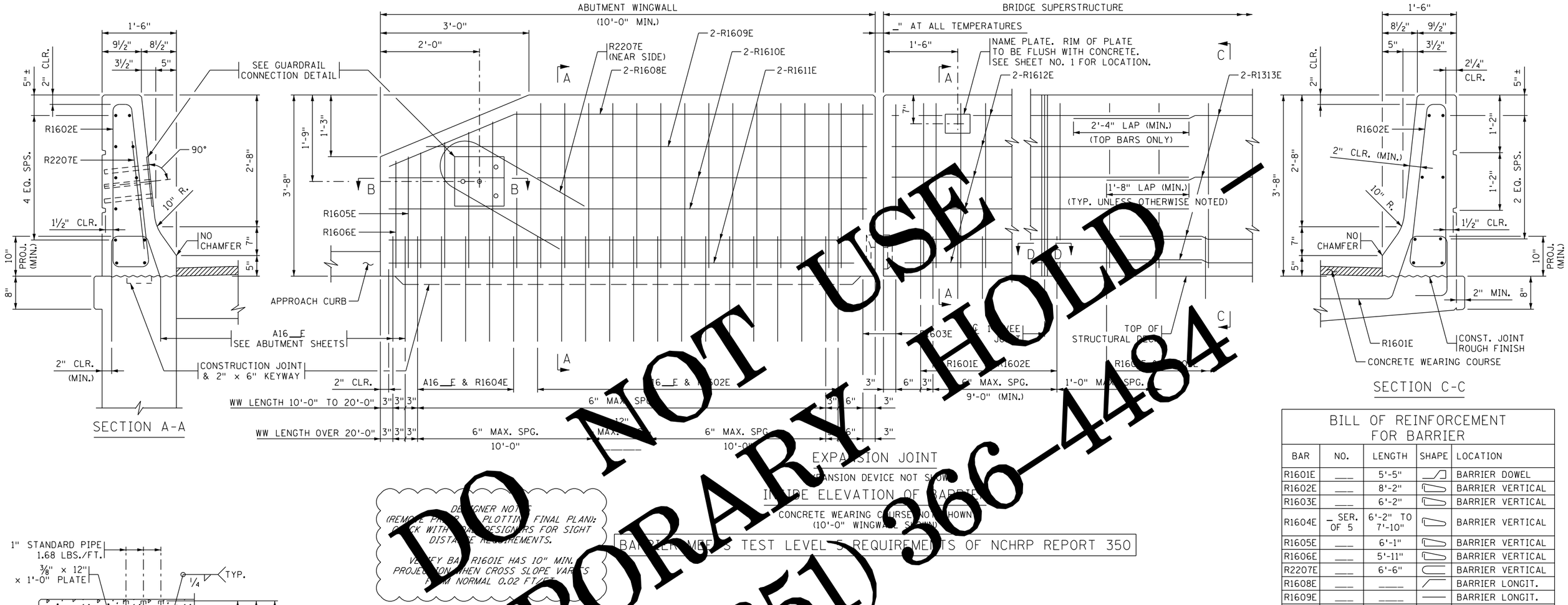

BILL OF REINFORCEMENT FOR BARRIER

BAR	NO.	LENGTH	SHAPE	LOCATION
R1601E	___	5'-5"		BARRIER DOWEL
R1602E	___	8'-2"		BARRIER VERTICAL
R1603E	___	6'-2"		BARRIER VERTICAL
R1604E	_ SER. OF 5	6'-2" TO 7'-10"		BARRIER VERTICAL
R1605E	___	6'-1"		BARRIER VERTICAL
R1606E	___	5'-11"		BARRIER VERTICAL
R2207E	___	6'-6"		BARRIER VERTICAL
R1608E	___	____		BARRIER LONGIT.
R1609E	___	____		BARRIER LONGIT.
R1610E	___	____		BARRIER LONGIT.
R1611E	___	____		BARRIER LONGIT.
R1612E	___	12'-6"		BARRIER LONGIT.
R1313E	___	____		BARRIER LONGIT.

GENERAL NOTES

LENGTH OF "TYPE F (TL-5) RAILING CONCRETE (3Y46 OR 3Y46A)" FOR PAYMENT SHALL BE MEASURED BETWEEN THE OUTSIDE FACES OF THE CONCRETE BARRIER.

CONCRETE BARRIER = 582 LBS./FT. (0.144 CU. YDS./FT.)

FINISH ALL EDGES OF BARRIER WITH ½" VEE, EXCEPT WHERE OTHERWISE NOTED.

MAXIMUM SPACING OF 1" VEE JOINTS SHALL BE 10 FT.

GUARDRAIL CONNECTION TO BE STRUCTURAL STEEL, Mn/DOT SPEC. 3306.

GUARDRAIL CONNECTION AND NAME PLATE TO BE CONSIDERED INCIDENTAL TO "TYPE F (TL-5) RAILING CONCRETE (3Y46 OR 3Y46A)".

BARRIER QUANTITIES ARE LISTED IN SUMMARY OF QUANTITIES FOR SUPERSTRUCTURE.

DO NOT USE — TEMPORARY HOLD — CALL (651) 366-4484

REVISED: 05-26-2006

APPROVED: JULY 25, 2005

STATE BRIDGE ENGINEER

CERTIFIED BY _____ LICENSED PROFESSIONAL ENGINEER _____ DATE

NAME: _____ LIC. NO. _____

TITLE: CONCRETE BARRIER (TYPE F, TL-5) WITH INTEGRAL END POST (WITH CONC. WEARING COURSE)

DES: _____ DR: _____ CHK: _____ CHK: _____

SHEET NO. __ OF __ SHEETS

FIG. 5-397.122

APPROVED:

BRIDGE NO. _____

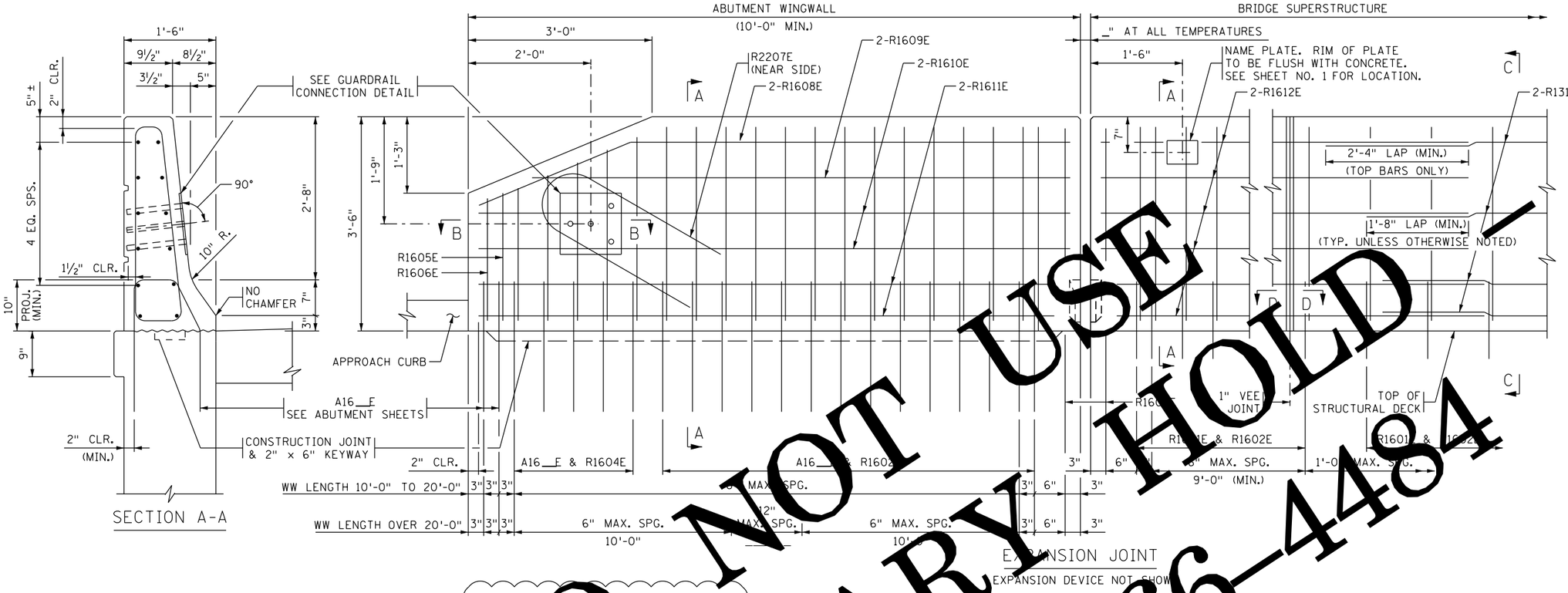

DESIGNER NOTES
(REMOVE PRIOR TO PLACING FINAL PLAN):
CHECK WITH ROAD DESIGNERS FOR SIGHT DISTANCE REQUIREMENTS.

VERIFY BAR R1601E HAS 10" MIN. PROJECTION WHEN CROSS SLOPE VARIES FROM NORMAL 0.02 FT/FT.

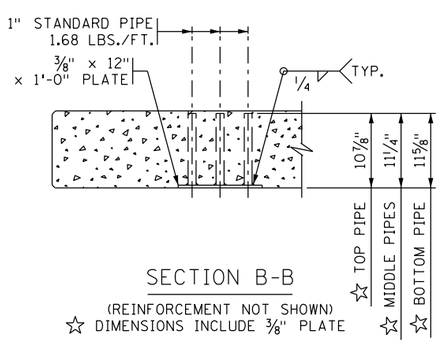

SECTION B-B

(REINFORCEMENT NOT SHOWN)
☆ DIMENSIONS INCLUDE ⅜" PLATE

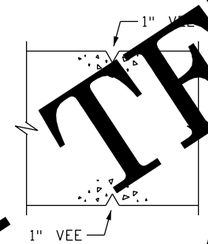

SECTION D-D

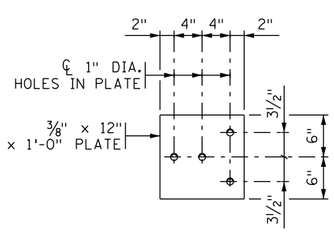

GUARDRAIL CONNECTION DETAIL

GALVANIZE AFTER FABRICATION PER Mn/DOT SPEC. 3394
ESTIMATED WEIGHT = 22 LBS

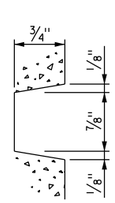

BARRIER RUSTICATION

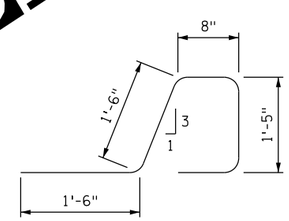

R1601E

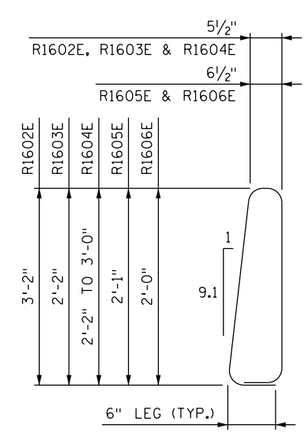

R1602E, R1603E, R1604E, R1605E & R1606E

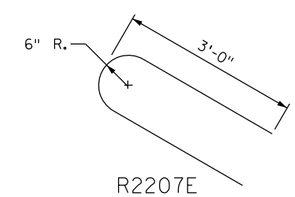

R2207E

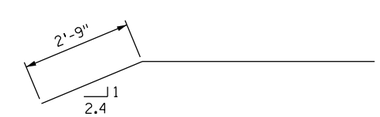

R1608E

BILL OF REINFORCEMENT FOR BARRIER				
BAR	NO.	LENGTH	SHAPE	LOCATION
R1601E	___	5'-7"		BARRIER DOWEL
R1602E	___	7'-10"		BARRIER VERTICAL
R1603E	___	5'-10"		BARRIER VERTICAL
R1604E	_ SER. OF 5	5'-10" TO 7'-6"		BARRIER VERTICAL
R1605E	___	5'-9"		BARRIER VERTICAL
R1606E	___	5'-7"		BARRIER VERTICAL
R2207E	___	6'-6"		BARRIER VERTICAL
R1608E	___	_____		BARRIER LONGIT.
R1609E	___	_____		BARRIER LONGIT.
R1610E	___	_____		BARRIER LONGIT.
R1611E	___	_____		BARRIER LONGIT.
R1612E	___	12'-6"		BARRIER LONGIT.
R1313E	___	_____		BARRIER LONGIT.

GENERAL NOTES

LENGTH OF "TYPE F (TL-5) RAILING CONCRETE (3Y46 OR 3Y46A)" FOR PAYMENT SHALL BE MEASURED BETWEEN THE OUTSIDE FACES OF THE CONCRETE BARRIER.

CONCRETE BARRIER = 545 LBS./FT. (0.134 CU. YDS./FT.)

FINISH ALL EDGES OF BARRIER WITH ½" VEE, EXCEPT WHERE OTHERWISE NOTED.

MAXIMUM SPACING OF 1" VEE JOINTS SHALL BE 10 FT.

GUARDRAIL CONNECTION TO BE STRUCTURAL STEEL, Mn/DOT SPEC. 3306.

GUARDRAIL CONNECTION AND NAME PLATE TO BE CONSIDERED INCIDENTAL TO "TYPE F (TL-5) RAILING CONCRETE (3Y46 OR 3Y46A)".

BARRIER QUANTITIES ARE LISTED IN SUMMARY OF QUANTITIES FOR SUPERSTRUCTURE.

DO NOT USE
TEMPORARY HOLD
CALL (651) 366-4484

REVISED: 05-26-2006

APPROVED: JULY 25, 2005

STATE BRIDGE ENGINEER

CERTIFIED BY _____ LICENSED PROFESSIONAL ENGINEER _____ DATE

NAME: _____ LIC. NO. _____

TITLE: CONCRETE BARRIER (TYPE F, TL-5)
WITH INTEGRAL END POST
(WITHOUT CONC. WEARING COURSE)

DES: _____ DR: _____
CHK: _____ CHK: _____

SHEET NO. __ OF __ SHEETS

FIG. 5-397.124

APPROVED:

BRIDGE NO. _____

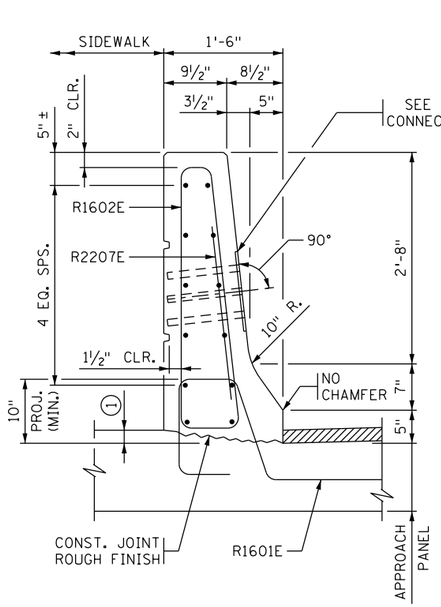

SECTION A-A

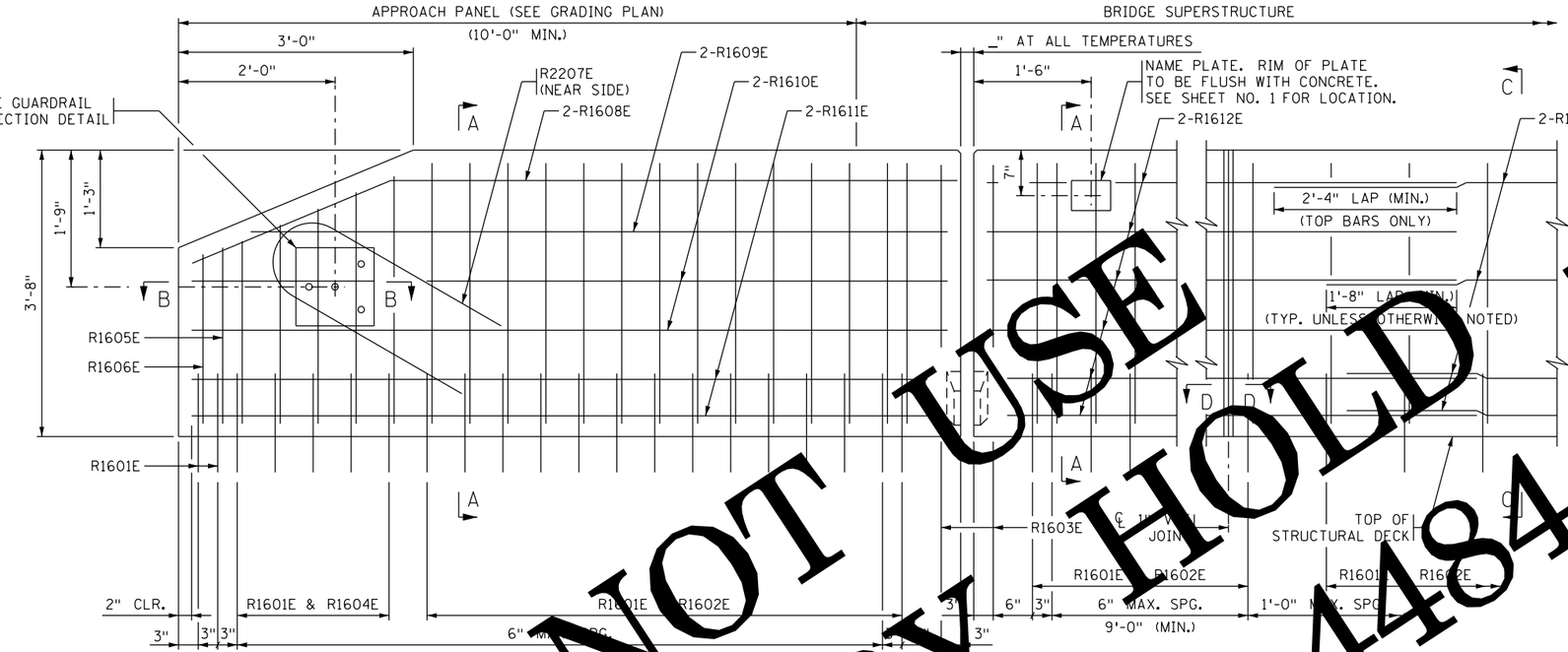

EXPANSION JOINT

EXPANSION DEVICE NOT SHOWN

INSIDE ELEVATION OF BARRIER

CONCRETE WEARING COURSE NOT SHOWN

BARRIER MEETS TEST LEVEL 5 REQUIREMENT OF NCHRP REPORT 350

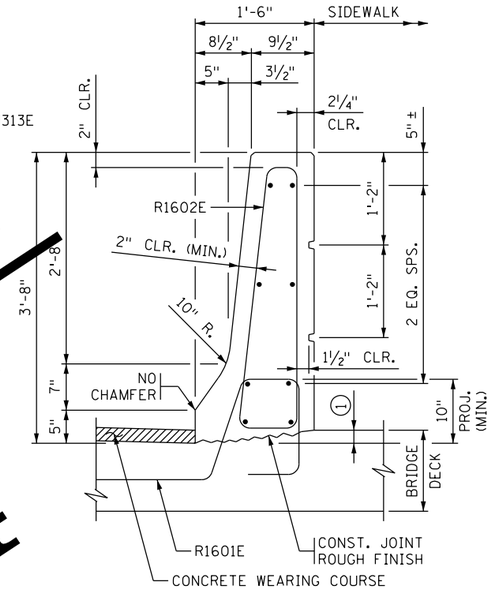

SECTION C-C

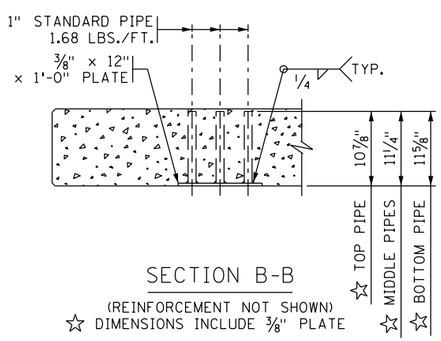

SECTION B-B

(REINFORCEMENT NOT SHOWN)

☆ DIMENSIONS INCLUDE ⅜" PLATE

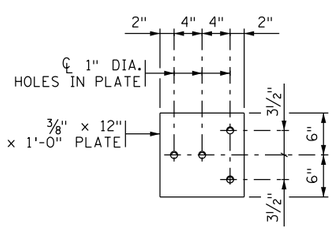

GUARDRAIL CONNECTION DETAIL

GALVANIZE AFTER FABRICATION PER Mn/DOT SPEC. 3394
ESTIMATED WEIGHT = 22 LBS

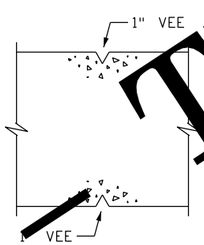

SECTION D-D

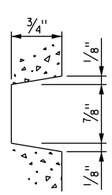

BARRIER RUSTICATION

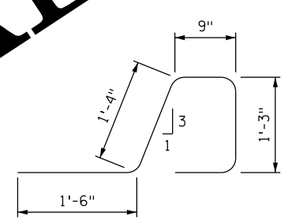

R1601E

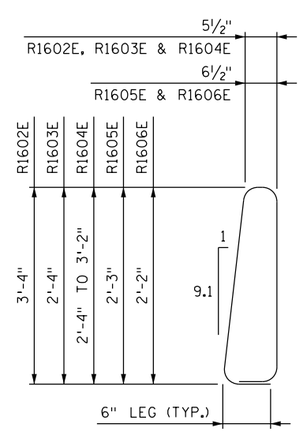

R1602E, R1603E, R1604E, R1605E & R1606E

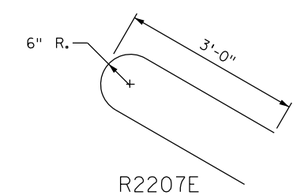

R2207E

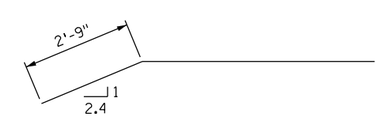

R1608E

BILL OF REINFORCEMENT FOR BARRIER

BAR	NO.	LENGTH	SHAPE	LOCATION
R1601E	___	5'-5"		BARRIER DOWEL
R1602E	___	8'-2"		BARRIER VERTICAL
R1603E	___	6'-2"		BARRIER VERTICAL
R1604E	_ SER. OF 5	6'-2" TO 7'-10"		BARRIER VERTICAL
R1605E	___	6'-1"		BARRIER VERTICAL
R1606E	___	5'-11"		BARRIER VERTICAL
R2207E	___	6'-6"		BARRIER VERTICAL
R1608E	___	_____		BARRIER LONGIT.
R1609E	___	_____		BARRIER LONGIT.
R1610E	___	_____		BARRIER LONGIT.
R1611E	___	_____		BARRIER LONGIT.
R1612E	___	12'-6"		BARRIER LONGIT.
R1313E	___	_____		BARRIER LONGIT.

GENERAL NOTES

LENGTH OF "TYPE F (TL-5) RAILING CONCRETE (3Y46 OR 3Y46A)" FOR PAYMENT SHALL BE MEASURED BETWEEN THE OUTSIDE FACES OF THE CONCRETE BARRIER.

CONCRETE BARRIER = 582 LBS./FT. (0.144 CU. YDS./FT.)

FINISH ALL EDGES OF BARRIER WITH ½" VEE, EXCEPT WHERE OTHERWISE NOTED.

MAXIMUM SPACING OF 1" VEE JOINTS SHALL BE 10 FT.

GUARDRAIL CONNECTION TO BE STRUCTURAL STEEL, Mn/DOT SPEC. 3306.

GUARDRAIL CONNECTION AND NAME PLATE TO BE CONSIDERED INCIDENTAL TO "TYPE F (TL-5) RAILING CONCRETE (3Y46 OR 3Y46A)".

BARRIER QUANTITIES ARE LISTED IN SUMMARY OF QUANTITIES FOR SUPERSTRUCTURE.

(1) DIMENSIONS TO BE DETERMINED BASED ON THE BRIDGE DECK SLOPE.

DO NOT USE
TEMPORARY HOLD
CALL (651) 366-4484

REVISED: 05-26-2006

APPROVED: JULY 25, 2005

STATE BRIDGE ENGINEER

CERTIFIED BY _____ LICENSED PROFESSIONAL ENGINEER _____ DATE

NAME: _____ LIC. NO. _____

TITLE: CONCRETE BARRIER (TYPE F, TL-5) WITH BRIDGE SLAB SIDEWALK AND INTEGRAL END POST (WITH CONC. WEARING COURSE)

DES: _____ DR: _____ CHK: _____ CHK: _____

SHEET NO. __ OF __ SHEETS

APPROVED:

FIG. 5-397.125

BRIDGE NO. _____

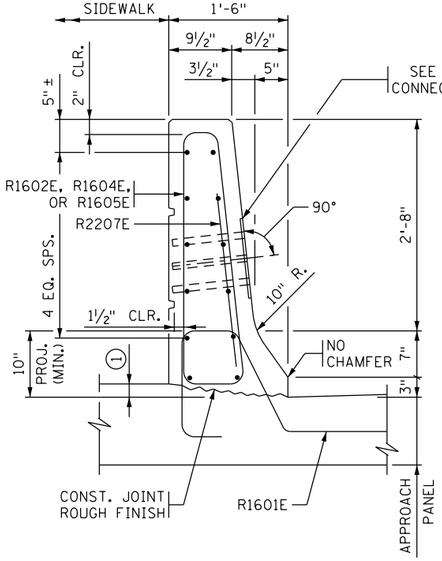

SECTION A-A

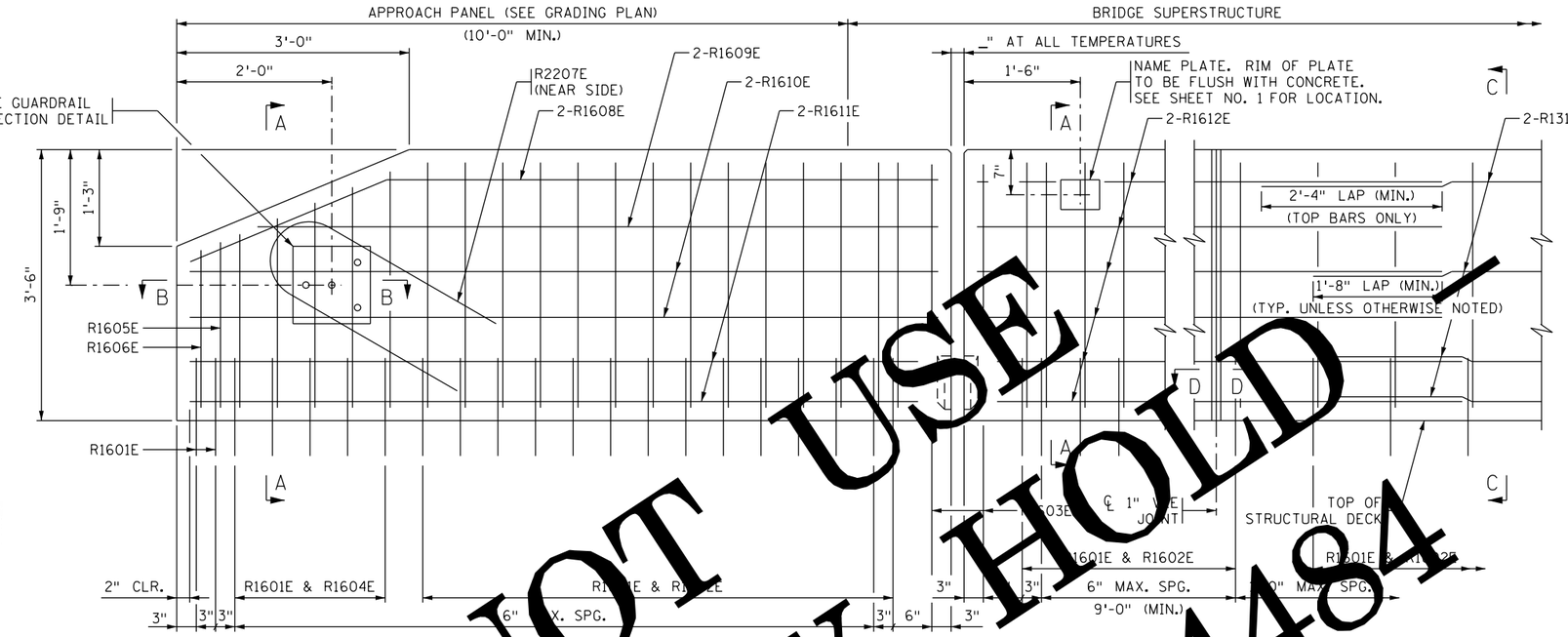

EXPANSION JOINT

EXPANSION DEVICE NOT SHOWN

INSIDE ELEVATION OF BARRIER

BARRIER MEETS TEST LEVEL 5 REQUIREMENTS OF NCHRP REPORT 350

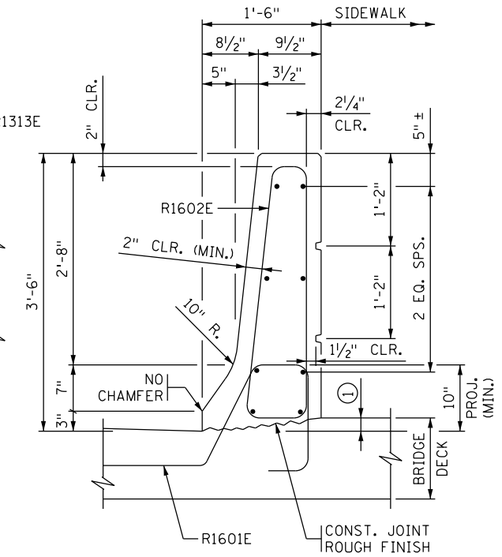

SECTION C-C

DESIGNER NOTES
(REMOVE PRIOR TO PLOTTING FINAL PLAN):
CHECK WITH ROAD DESIGNERS FOR SIGHT DISTANCE REQUIREMENTS.

COORDINATE BARRIER ON APPROACH PANEL WITH ROAD DESIGNERS.

CHECK BAR RIDDIE HAS 10" MIN. PROJECTION WHEN CROSS SLOPE VARIES FROM NORMAL 0.02 FT/FT.

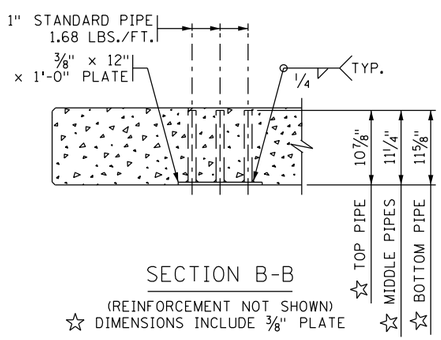

SECTION B-B

(REINFORCEMENT NOT SHOWN)
☆ DIMENSIONS INCLUDE ⅜" PLATE

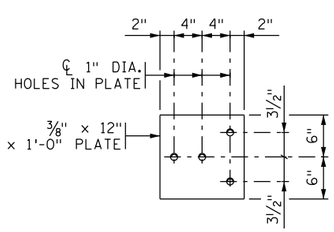

GUARDRAIL CONNECTION DETAIL

GALVANIZE AFTER FABRICATION PER Mn/DOT SPEC. 3394
ESTIMATED WEIGHT = 22 LBS

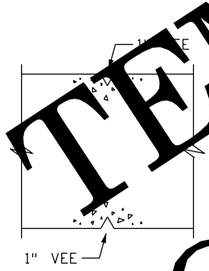

SECTION D-D

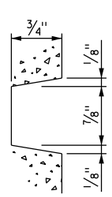

BARRIER RUSTICATION

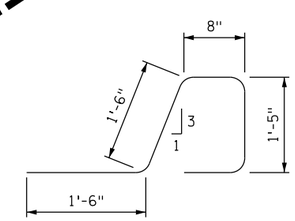

R1601E

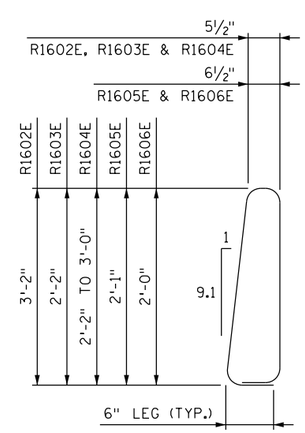

R1602E, R1603E, R1604E, R1605E & R1606E

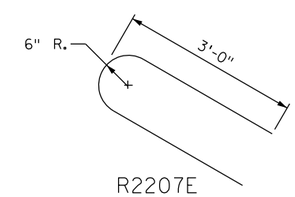

R2207E

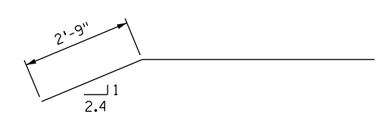

R1608E

BILL OF REINFORCEMENT FOR BARRIER

BAR	NO.	LENGTH	SHAPE	LOCATION
R1601E	___	5'-7"		BARRIER DOWEL
R1602E	___	7'-10"		BARRIER VERTICAL
R1603E	___	5'-10"		BARRIER VERTICAL
R1604E	_ SER. OF 5	5'-10" TO 7'-6"		BARRIER VERTICAL
R1605E	___	5'-9"		BARRIER VERTICAL
R1606E	___	5'-7"		BARRIER VERTICAL
R2207E	___	6'-6"		BARRIER VERTICAL
R1608E	___	_____		BARRIER LONGIT.
R1609E	___	_____		BARRIER LONGIT.
R1610E	___	_____		BARRIER LONGIT.
R1611E	___	_____		BARRIER LONGIT.
R1612E	___	12'-6"		BARRIER LONGIT.
R1313E	___	_____		BARRIER LONGIT.

GENERAL NOTES

LENGTH OF "TYPE F (TL-5) RAILING CONCRETE (3Y46 OR 3Y46A)" FOR PAYMENT SHALL BE MEASURED BETWEEN THE OUTSIDE FACES OF THE CONCRETE BARRIER.

CONCRETE BARRIER = 545 LBS./FT. (0.134 CU. YDS./FT.)

FINISH ALL EDGES OF BARRIER WITH ½" VEE, EXCEPT WHERE OTHERWISE NOTED.

MAXIMUM SPACING OF 1" VEE JOINTS SHALL BE 10 FT.

GUARDRAIL CONNECTION TO BE STRUCTURAL STEEL, Mn/DOT SPEC. 3306.

GUARDRAIL CONNECTION AND NAME PLATE TO BE CONSIDERED INCIDENTAL TO "TYPE F (TL-5) RAILING CONCRETE (3Y46 OR 3Y46A)".

BARRIER QUANTITIES ARE LISTED IN SUMMARY OF QUANTITIES FOR SUPERSTRUCTURE.

(1) DIMENSIONS TO BE DETERMINED BASED ON THE BRIDGE DECK SLOPE.

DO NOT USE
TEMPORARY HOLD
CALL (651) 366-4484

REVISED: 05-26-2006

APPROVED: JULY 25, 2005

STATE BRIDGE ENGINEER

CERTIFIED BY _____ LICENSED PROFESSIONAL ENGINEER _____ DATE

NAME: _____ LIC. NO. _____

TITLE: CONCRETE BARRIER (TYPE F, TL-5) WITH BRIDGE SLAB SIDEWALK AND INTEGRAL END POST (WITHOUT CONC. WEARING COURSE)

DES: _____ DR: _____ CHK: _____ CHK: _____

SHEET NO. __ OF __ SHEETS

FIG. 5-397.126

APPROVED:

BRIDGE NO. _____

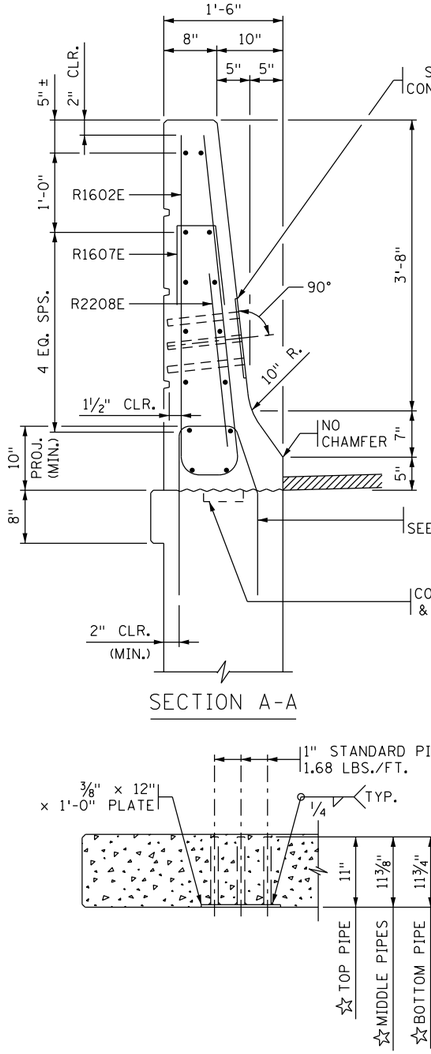

SECTION A-A

SECTION B-B

GUARDRAIL CONNECTION DETAIL

GALVANIZE AFTER FABRICATION PER Mn/DOT SPEC. 3394
ESTIMATED WEIGHT = 22 LBS

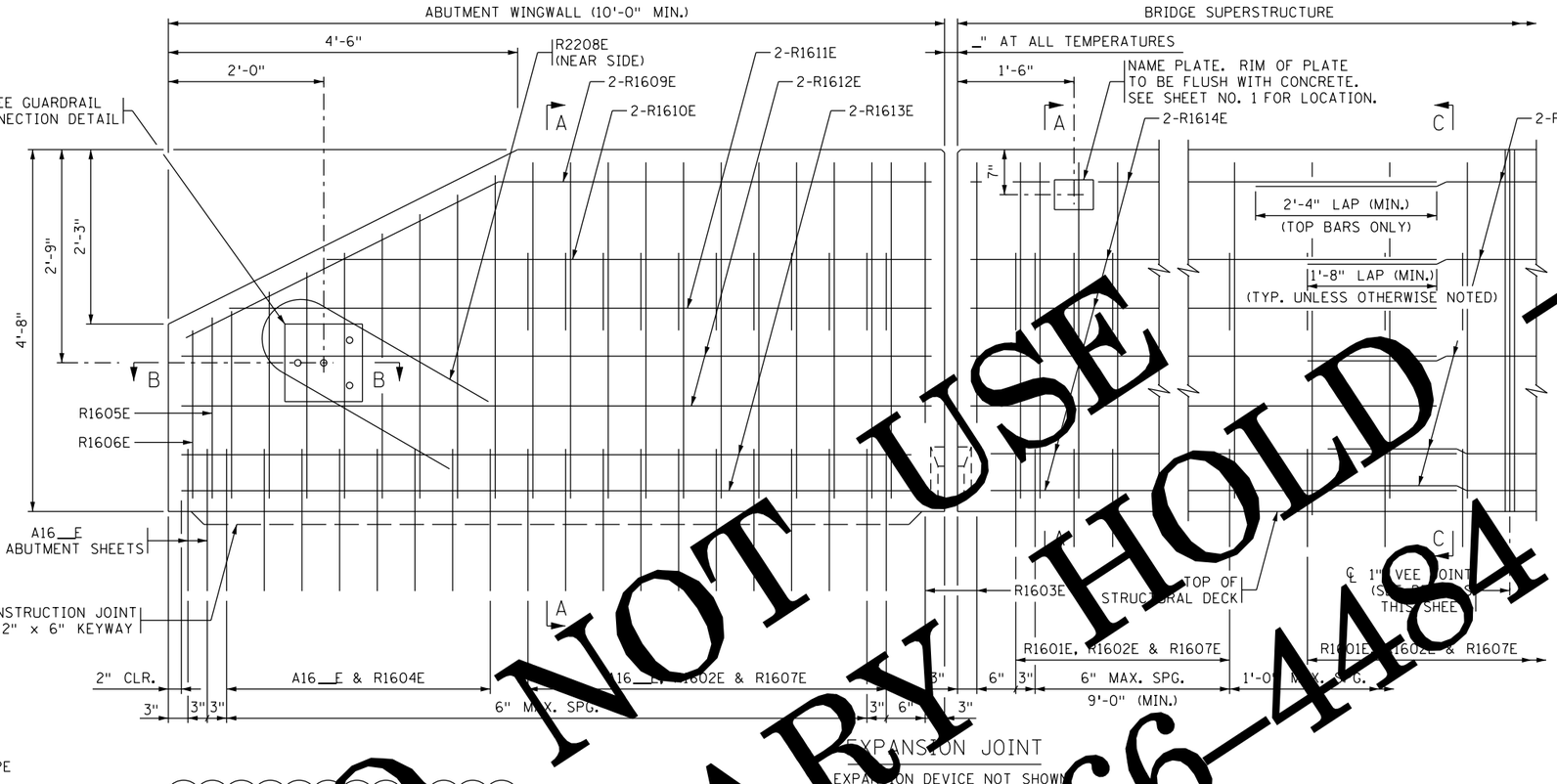

DESIGNER NOTES
(REMOVE PRIOR TO SUBMITTING FINAL PLAN):
CHECK WITH ROADWAY DESIGNERS FOR SIGHT DISTANCE REQUIREMENTS.

VERIFY BAR RIGGIE HAS 10" MIN. PROJECTION WHEN CROSS SLOPE VARIES FROM NORMAL 0.02 FT/FT.

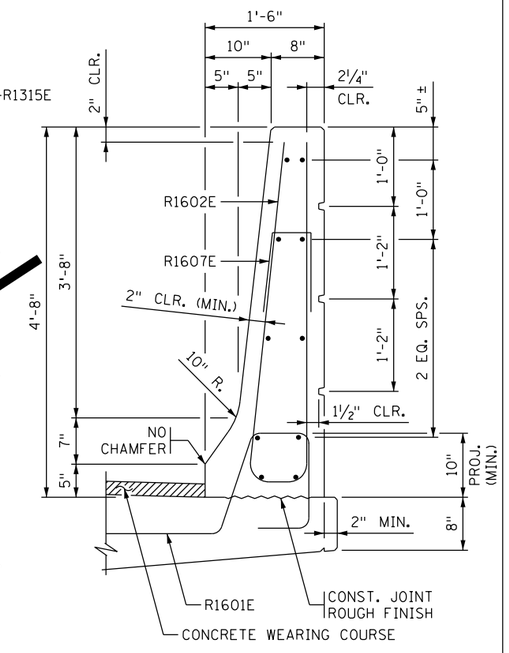

SECTION C-C

BILL OF REINFORCEMENT FOR BARRIER				
BAR	NO.	LENGTH	SHAPE	LOCATION
R1601E	___	5'-5"		BARRIER DOWEL
R1602E	___	9'-5"		BARRIER VERTICAL
R1603E	___	7'-5"		BARRIER VERTICAL
R1604E	___ SER. OF 8	5'-3" TO 8'-9"		BARRIER VERTICAL
R1605E	___	5'-4"		BARRIER VERTICAL
R1606E	___	5'-2"		BARRIER VERTICAL
R1607E	___	2'-6"		BARRIER TIE
R2208E	___	6'-6"		BARRIER VERTICAL
R1609E	___	_____		BARRIER LONGIT.
R1610E	___	_____		BARRIER LONGIT.
R1611E	___	_____		BARRIER LONGIT.
R1612E	___	_____		BARRIER LONGIT.
R1613E	___	_____		BARRIER LONGIT.
R1614E	___	12'-6"		BARRIER LONGIT.
R1315E	___	_____		BARRIER LONGIT.

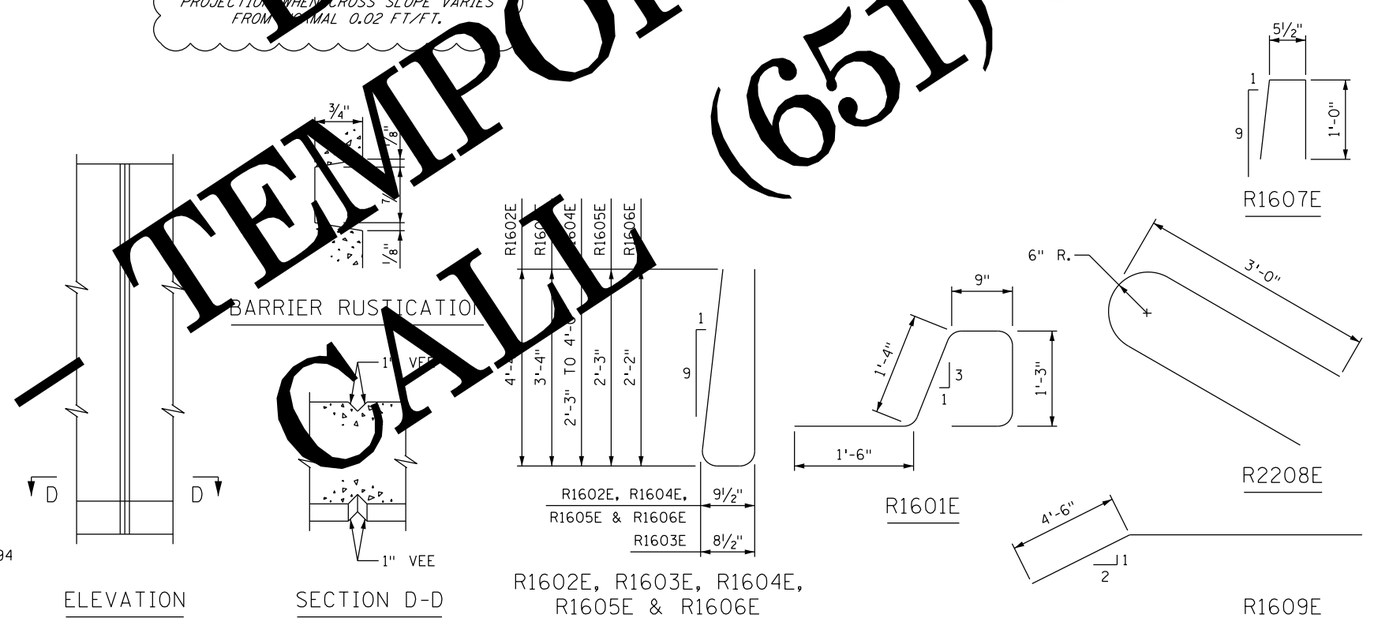

ELEVATION

SECTION D-D

R1602E, R1603E, R1604E, R1605E & R1606E

VEE JOINT DETAILS

GENERAL NOTES

LENGTH OF "TYPE F (TL-5) WITH GLARE SCREEN RAILING CONCRETE (3Y46 OR 3Y46A)" FOR PAYMENT SHALL BE MEASURED BETWEEN THE OUTSIDE FACES OF THE CONCRETE BARRIER.

CONCRETE BARRIER = 670 LBS./FT. (0.165 CU. YDS./FT.)

FINISH ALL EDGES OF BARRIER WITH ½" VEE, EXCEPT WHERE OTHERWISE NOTED.

MAXIMUM SPACING OF 1" VEE JOINTS SHALL BE 10 FT.

GUARDRAIL CONNECTION TO BE STRUCTURAL STEEL, Mn/DOT SPEC. 3306.

GUARDRAIL CONNECTION AND NAME PLATE TO BE CONSIDERED INCIDENTAL TO "TYPE F (TL-5) WITH GLARE SCREEN RAILING CONCRETE (3Y46 OR 3Y46A)".

BARRIER QUANTITIES ARE LISTED IN SUMMARY OF QUANTITIES FOR SUPERSTRUCTURE.

DO NOT USE — TEMPORARY HOLD — CALL (651) 366-4484

REVISED:

APPROVED: JUNE 14, 2006
Daniel L. Dorgan
STATE BRIDGE ENGINEER

CERTIFIED BY _____ LICENSED PROFESSIONAL ENGINEER _____ DATE
NAME: _____ LIC. NO. _____

TITLE: CONCRETE BARRIER (TYPE F, TL-5) WITH GLARE SCREEN AND INTEGRAL END POST (WITH CONC. WEARING COURSE)

DES: _____ DR: _____
CHK: _____ CHK: _____
SHEET NO. __ OF __ SHEETS

FIG. 5-397.128

APPROVED:

BRIDGE NO. _____

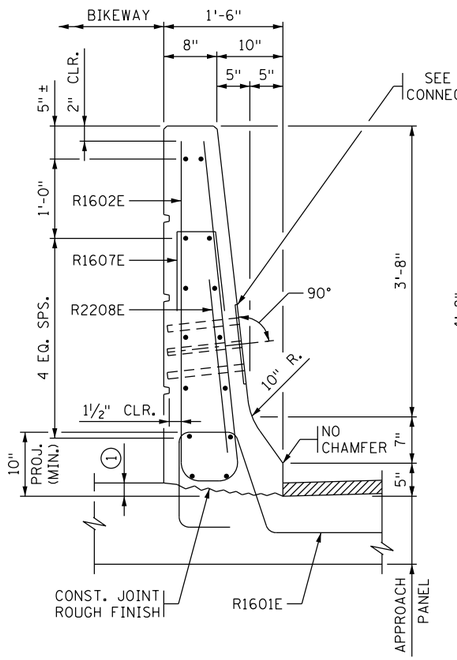

SECTION A-A

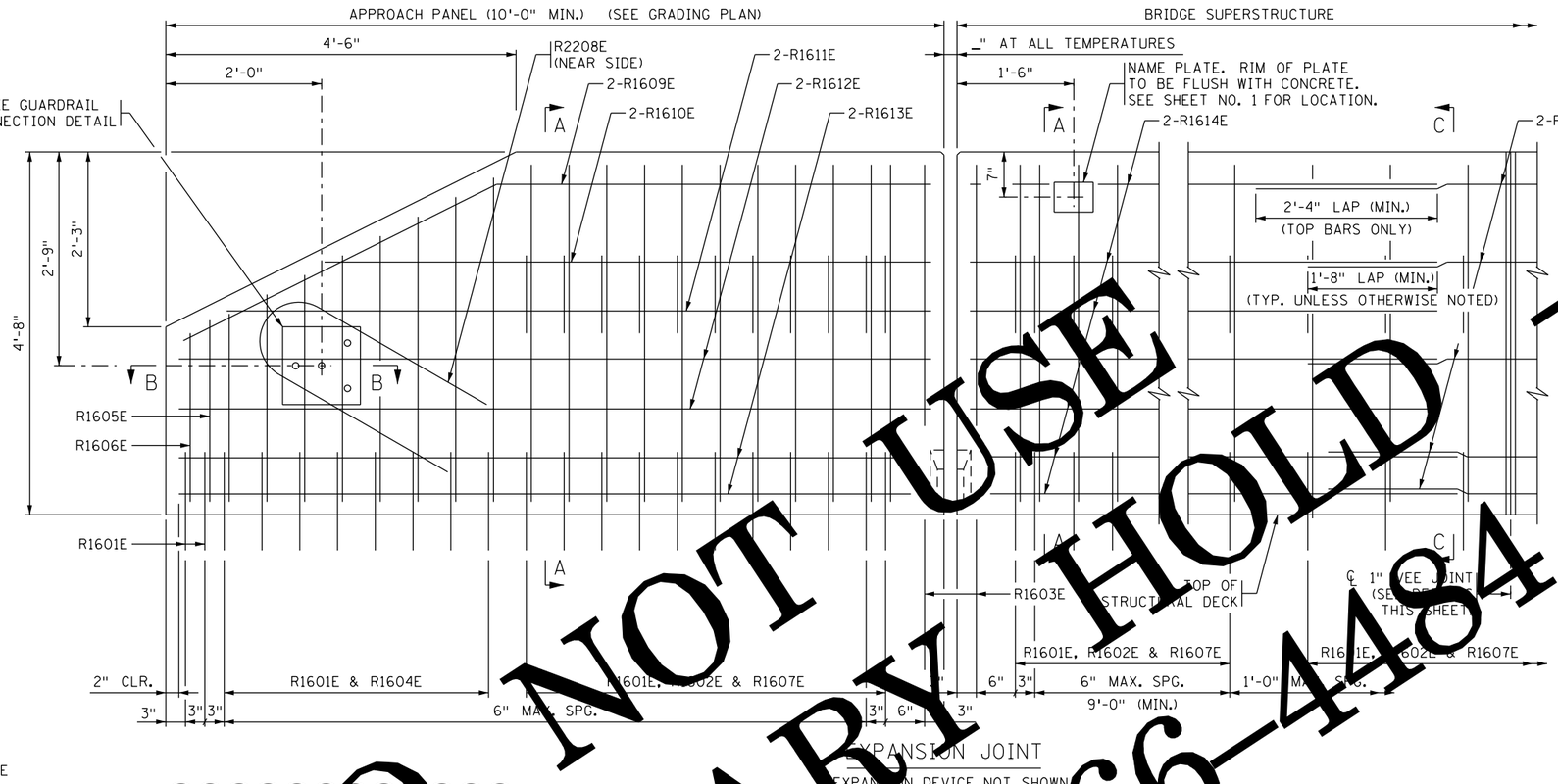

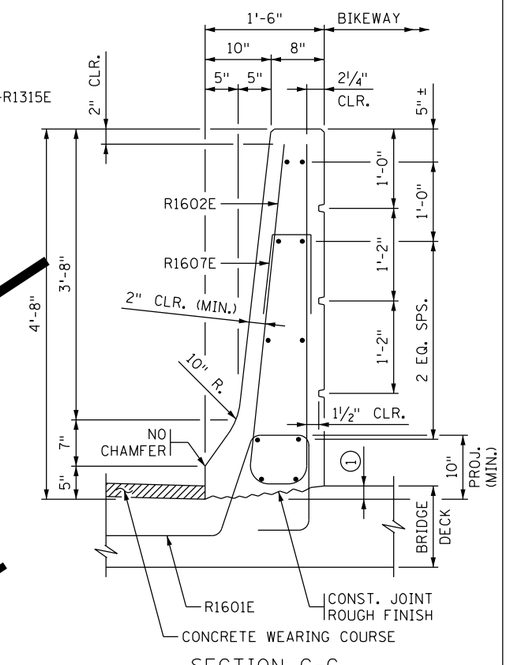

SECTION C-C

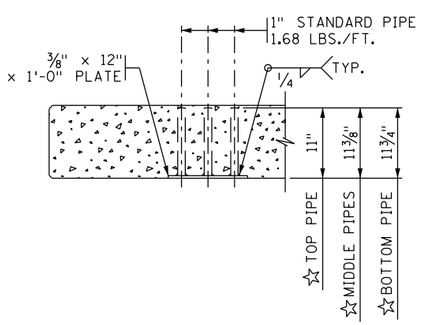

SECTION B-B

(REINFORCEMENT NOT SHOWN)
☆ DIMENSIONS INCLUDE ⅜" PLATE

DESIGN NOTES
(REMOVE PRIOR TO PLACING FINAL PLAN):
CHECK WITH ROADWAY DESIGNERS FOR SIGHT DISTANCE REQUIREMENTS.

VERIFY THAT R1601E HAS 10" MIN. PROJECTION WHEN CROSS SLOPE VARIES FROM NORMAL 0.02 FT/FT.

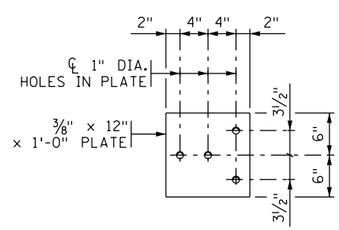

GUARDRAIL CONNECTION DETAIL

GALVANIZE AFTER FABRICATION PER Mn/DOT SPEC. 3394
ESTIMATED WEIGHT = 22 LBS

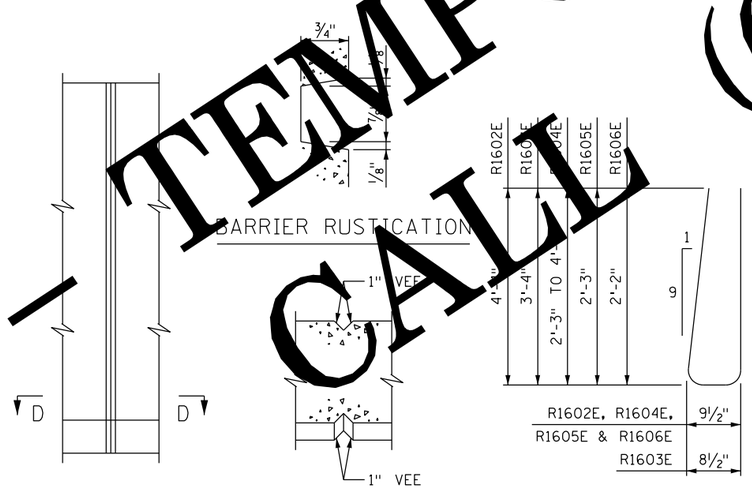

ELEVATION

SECTION D-D

R1602E, R1603E, R1604E, R1605E & R1606E

VEE JOINT DETAILS

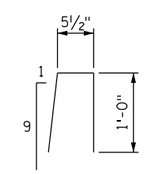

R1607E

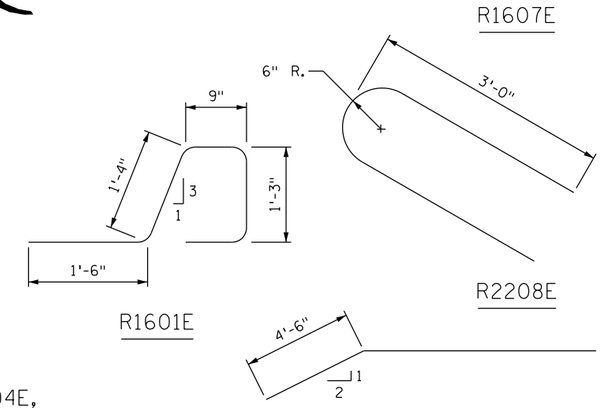

R1601E

R2208E

R1609E

BILL OF REINFORCEMENT FOR BARRIER

BAR	NO.	LENGTH	SHAPE	LOCATION
R1601E	___	5'-5"		BARRIER DOWEL
R1602E	___	9'-5"		BARRIER VERTICAL
R1603E	___	7'-5"		BARRIER VERTICAL
R1604E	___ SER. OF 8	5'-3" TO 8'-9"		BARRIER VERTICAL
R1605E	___	5'-4"		BARRIER VERTICAL
R1606E	___	5'-2"		BARRIER VERTICAL
R1607E	___	2'-6"		BARRIER TIE
R2208E	___	6'-6"		BARRIER VERTICAL
R1609E	___	_____		BARRIER LONGIT.
R1610E	___	_____		BARRIER LONGIT.
R1611E	___	_____		BARRIER LONGIT.
R1612E	___	_____		BARRIER LONGIT.
R1613E	___	_____		BARRIER LONGIT.
R1614E	___	12'-6"		BARRIER LONGIT.
R1315E	___	_____		BARRIER LONGIT.

GENERAL NOTES

LENGTH OF "TYPE F (TL-5) WITH BIKEWAY RAILING CONCRETE (3Y46 OR 3Y46A)" FOR PAYMENT SHALL BE MEASURED BETWEEN THE OUTSIDE FACES OF THE CONCRETE BARRIER.

CONCRETE BARRIER = 670 LBS./FT. (0.165 CU. YDS./FT.)

FINISH ALL EDGES OF BARRIER WITH ½" VEE, EXCEPT WHERE OTHERWISE NOTED.

MAXIMUM SPACING OF 1" VEE JOINTS SHALL BE 10 FT.

GUARDRAIL CONNECTION TO BE STRUCTURAL STEEL, Mn/DOT SPEC. 3306.

GUARDRAIL CONNECTION AND NAME PLATE TO BE CONSIDERED INCIDENTAL TO "TYPE F (TL-5) WITH BIKEWAY RAILING CONCRETE (3Y46 OR 3Y46A)".

BARRIER QUANTITIES ARE LISTED IN SUMMARY OF QUANTITIES FOR SUPERSTRUCTURE.

① DIMENSIONS TO BE DETERMINED BASED ON THE BRIDGE DECK SLOPE.

DO NOT USE
TEMPORARY HOLD
CALL (651) 366-4484

REVISED:

APPROVED: JUNE 14, 2006
Daniel L. Dorgan
STATE BRIDGE ENGINEER

CERTIFIED BY _____ LICENSED PROFESSIONAL ENGINEER _____ DATE
NAME: _____ LIC. NO. _____

TITLE: CONCRETE BARRIER (TYPE F, TL-5)
WITH BIKEWAY AND INTEGRAL END POST
(WITH CONC. WEARING COURSE)

DES: _____ DR: _____
CHK: _____ CHK: _____
SHEET NO. __ OF __ SHEETS

APPROVED:

FIG. 5-397.129

BRIDGE NO. _____

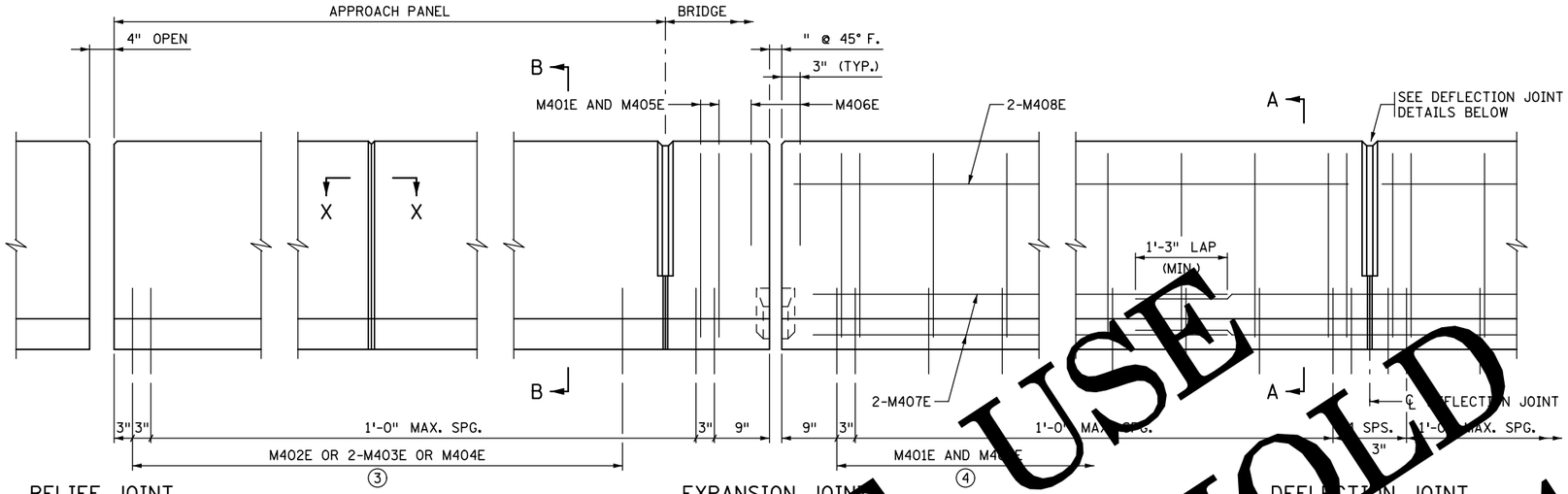

RELIEF JOINT

EXPANSION JOINT

EXPANSION DEVICE NOT SHOWN

DEFLECTION JOINT

INSIDE ELEVATION OF BARRIER

WEARING COURSE NOT SHOWN
(REINFORCED BARRIER SHOWN)

RAIL MEETS TEST LEVEL 4 REQUIREMENTS OF NCHRP REPORT 350

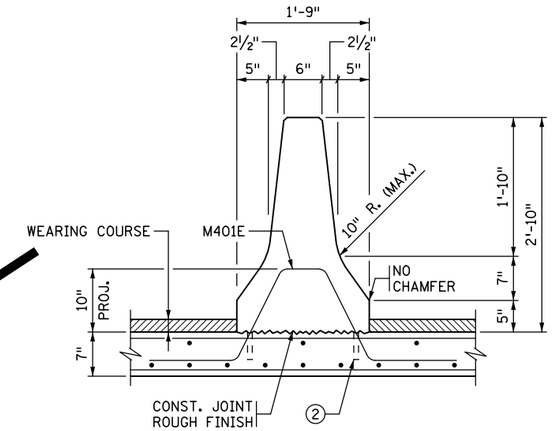

SECTION A-A

NON-REINFORCED BARRIER

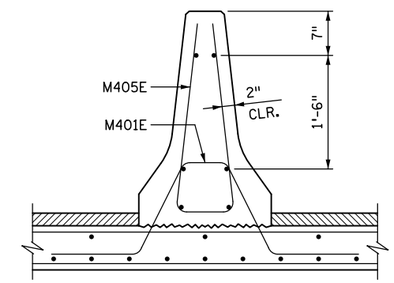

SECTION A-A

REINFORCED BARRIER

④

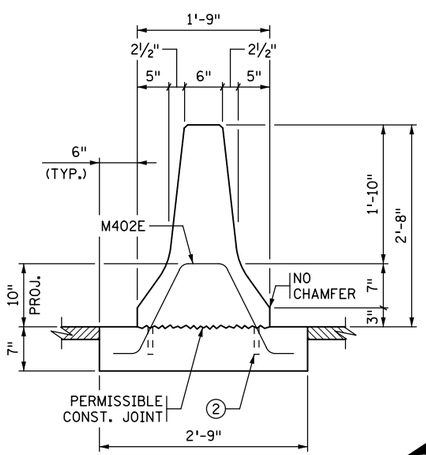

SECTION B-B

BITUMINOUS ADJ. SHOULDERS

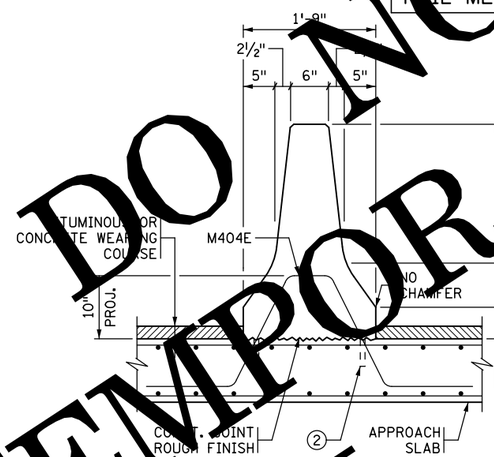

SECTION B-B

WEARING COURSE ON APPROACH ROADWAY

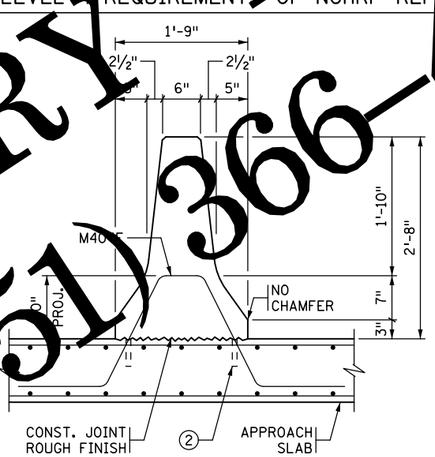

SECTION B-B

CONCRETE APPROACH ROADWAY

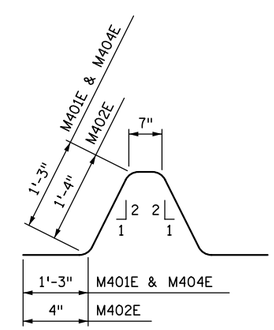

M401E, M402E & M404E

GENERAL NOTES

CONCRETE BARRIER SHALL BE CONC. MIX 3Y46 OR 3Y46A. CONCRETE BARRIER = 422 LBS./FT. (0.104 CU. YDS/FT.)

FINISH ALL EDGES OF BARRIER WITH ½" VEE EXCEPT WHERE OTHERWISE NOTED.

MAXIMUM SPACING OF CONCRETE DEFLECTION JOINTS SHALL BE 20 FT.

SEE SUPERSTRUCTURE SHEET FOR JOINT SPACING.

BARRIER QUANTITIES ARE INCLUDED IN SUMMARY OF QUANTITIES FOR SUPERSTRUCTURE.

① USE 2-M403E AS AN ALTERNATE FOR M402E OR M404E.

② DRILLED HOLE FOR GROUTED ALTERNATE M403E.

③ INCLUDED IF APPROACH PANEL IS PART OF BRIDGE PLAN.

④ USE REINFORCED BARRIER WHEN BARRIER IS SUBJECTED TO STAGE CONSTRUCTION TRAFFIC.

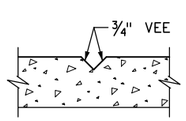

SECTION X-X

JOINT ALIGNED WITH TRANSVERSE JOINT IN APPROACH PANEL

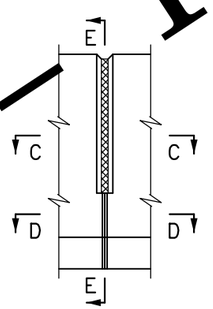

ELEVATION

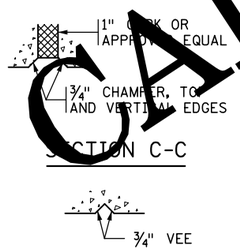

SECTION C-C

SECTION D-D

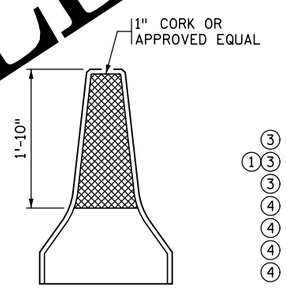

SECTION E-E

DEFLECTION JOINT DETAILS

BILL OF REINFORCEMENT FOR BARRIER

	BAR	NO.	LENGTH	SHAPE	LOCATION
	M401E		5'-7"		BARRIER DOWEL
③	M402E		3'-11"		BARRIER VERTICAL
①③	M403E		2'-0"		BARRIER VERTICAL
③	M404E		5'-7"		BARRIER DOWEL
④	M405E		5'-8"		BARRIER DOWEL
④	M406E		3'-0"		BARRIER DOWEL
④	M407E				BARRIER LONGITUDINAL
④	M408E				BARRIER LONGITUDINAL

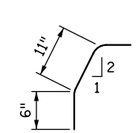

M403E

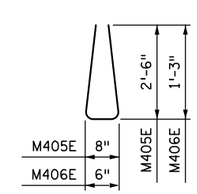

M405E & M406E

DO NOT USE
TEMPORARY HOLD
CALL (651) 366-4484

REVISED: 04-17-2013

APPROVED: DECEMBER 18, 2003

STATE BRIDGE ENGINEER

CERTIFIED BY _____ LICENSED PROFESSIONAL ENGINEER _____ DATE

NAME: LIC. NO.

TITLE: SOLID MEDIAN BARRIER
TYPE F
(WITH WEARING COURSE)

DES: DR: CHK: CHK:

SHEET NO. OF SHEETS

APPROVED:

BRIDGE NO.

FIG. 5-397.130

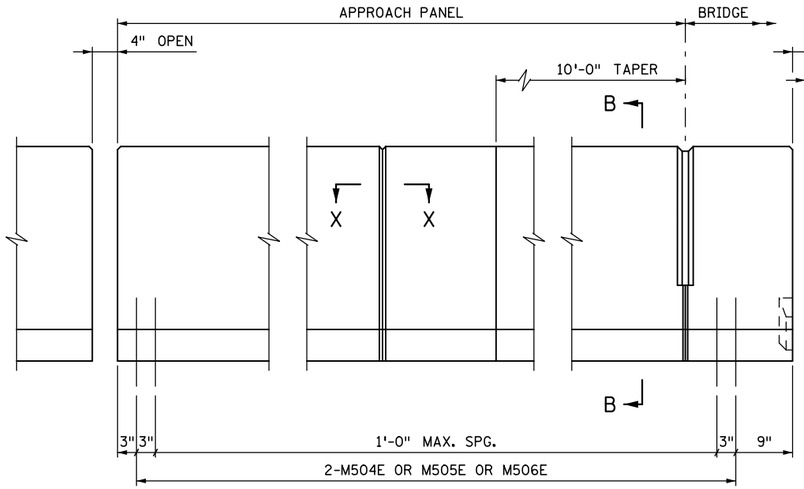

RELIEF JOINT

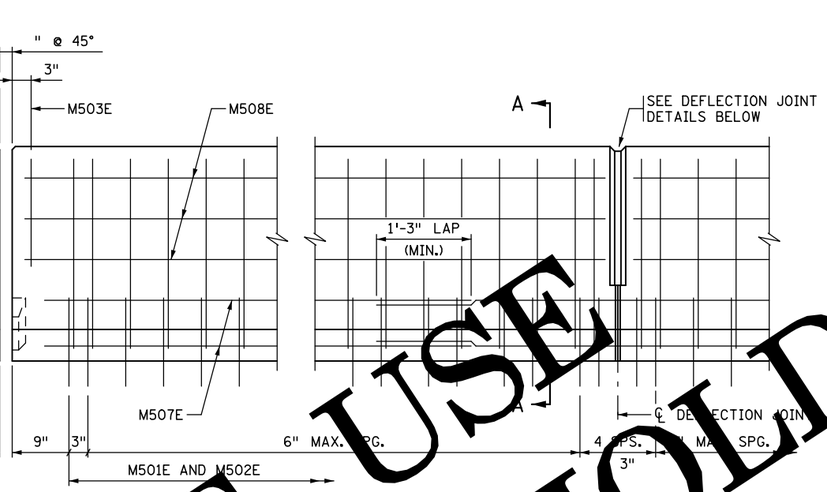

EXPANSION JOINT

EXPANSION DEVICE NOT SHOWN

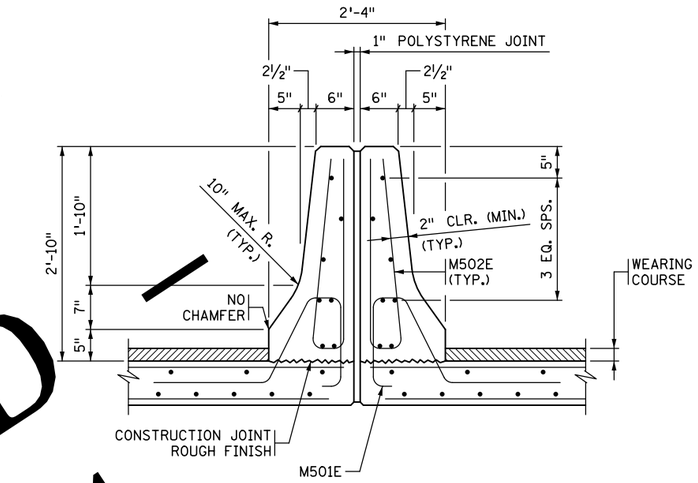

SECTION A-A

INSIDE ELEVATION OF BARRIER

WEARING COURSE NOT SHOWN

RAIL MEETS TEST LEVEL 4 REQUIREMENTS OF NCHRP REPORT 350.

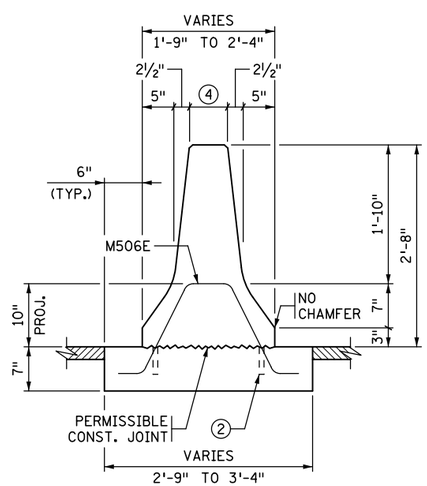

SECTION B-B

BITUMINOUS ADJ. SHOULDERS

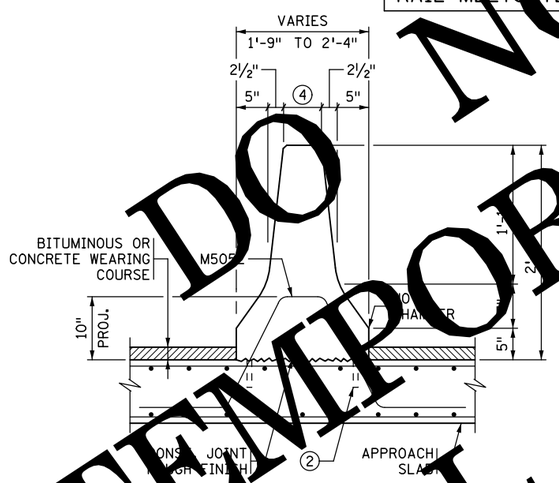

SECTION B-B

WEARING COURSE ON APPROACH ROADWAY

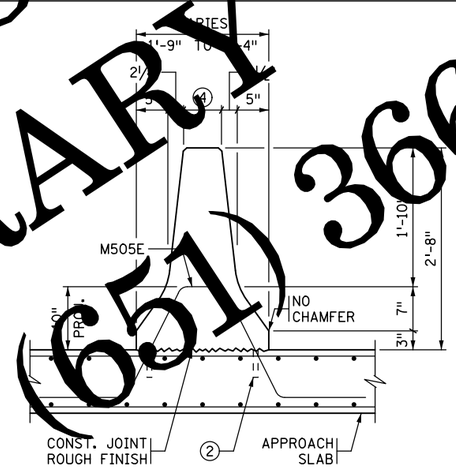

SECTION B-B

CONCRETE APPROACH ROADWAY

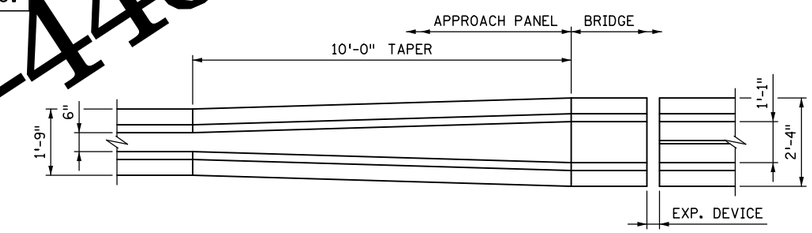

PLAN VIEW OF APPROACH BARRIER

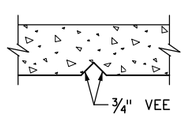

SECTION X-X

JOINT ALIGNED WITH TRANSVERSE JOINT IN APPROACH PANEL

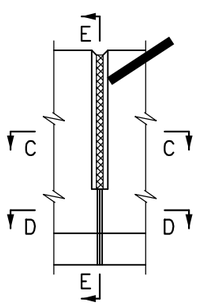

ELEVATION

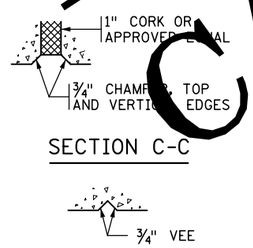

SECTION C-C

SECTION D-D

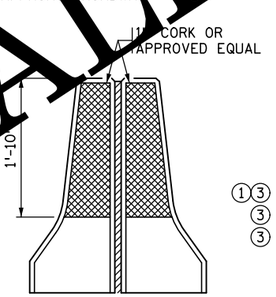

SECTION E-E

DEFLECTION JOINT DETAILS

BILL OF REINFORCEMENT FOR BARRIER				
BAR	NO.	LENGTH	SHAPE	LOCATION
M501E		4'-7"		BARRIER DOWEL
M502E		5'-5"		BARRIER VERTICAL
M503E		3'-2"		BARRIER VERTICAL
M504E		2'-2"		BARRIER DOWEL
①③ M505E		6'-2"		BARRIER DOWEL
③ M506E		3'-9"		BARRIER DOWEL
M507E				BARRIER LONGITUDINAL
M508E				BARRIER LONGITUDINAL

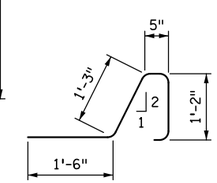

M501E

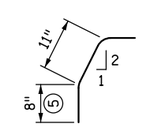

M504E

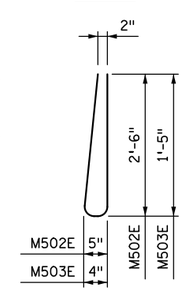

M502E & M503E

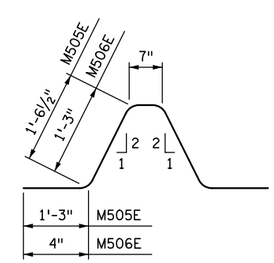

M505E & M506E

GENERAL NOTES

CONCRETE BARRIER SHALL BE CONC. MIX 3Y46 OR 3Y46A. CONCRETE BARRIER = 634 LBS./FT. (0.157 CU. YDS/FT.)

FINISH ALL EDGES OF BARRIER WITH ½" VEE EXCEPT WHERE OTHERWISE NOTED.

MAXIMUM SPACING OF CONCRETE DEFLECTION JOINTS SHALL BE 20 FT.

SEE SUPERSTRUCTURE SHEET FOR JOINT SPACING.

BARRIER QUANTITIES ARE INCLUDED IN SUMMARY OF QUANTITIES FOR SUPERSTRUCTURE.

① USE 2-M504E AS AN ALTERNATE FOR M505E OR M506E.

② DRILLED HOLE FOR GROUTED ALTERNATE M504E.

③ INCLUDED IF APPROACH PANEL IS PART OF BRIDGE PLAN.

④ VARIES FROM 6" AT THE START OF TAPER TO 1'-1" AT THE END OF THE BRIDGE.

⑤ BASED ON 10" SLAB.

DO NOT USE — TEMPORARY HOLD
CALL (651) 366-4484

REVISED: 04-17-2013

APPROVED: OCTOBER 29, 2004

STATE BRIDGE ENGINEER

CERTIFIED BY _____ LICENSED PROFESSIONAL ENGINEER _____ DATE

NAME: LIC. NO.

TITLE: SPLIT MEDIAN BARRIER
TYPE F
(WITH WEARING COURSE)

DES: DR: CHK: CHK:

SHEET NO. OF SHEETS

APPROVED:

FIG. 5-397.131

BRIDGE NO.

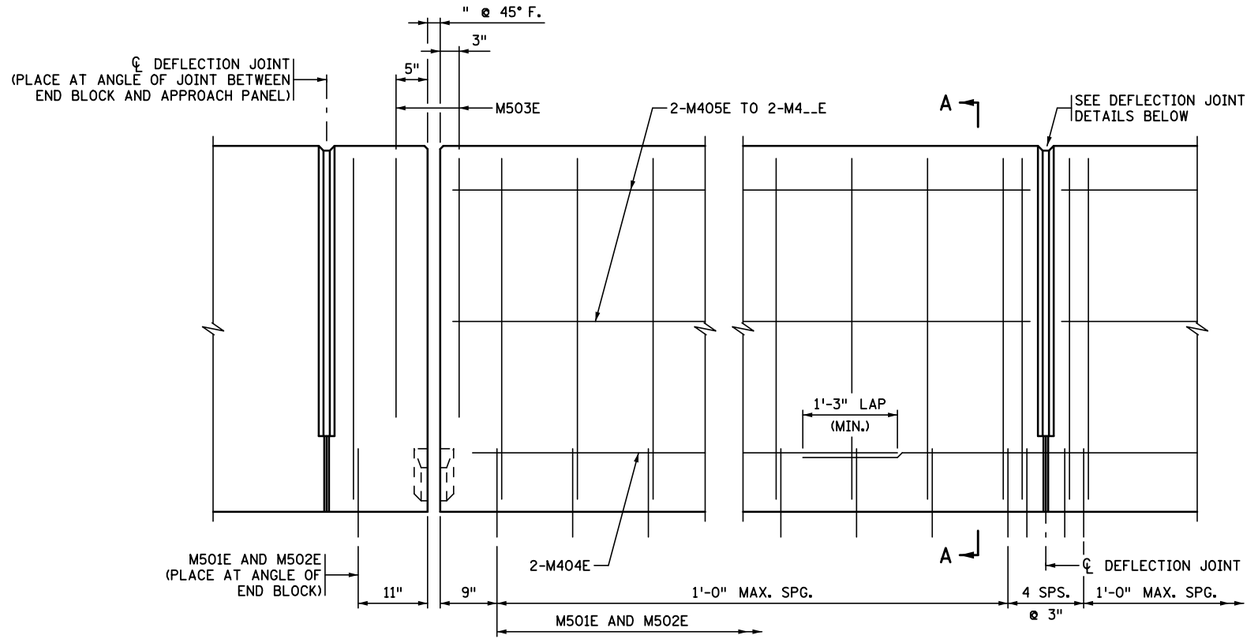

EXPANSION JOINT

EXPANSION DEVICE NOT SHOWN

DEFLECTION JOINT

INSIDE ELEVATION OF BARRIER

WEARING COURSE NOT SHOWN

RAIL MEETS TEST LEVEL 4 REQUIREMENTS OF NCHRP REPORT 350.

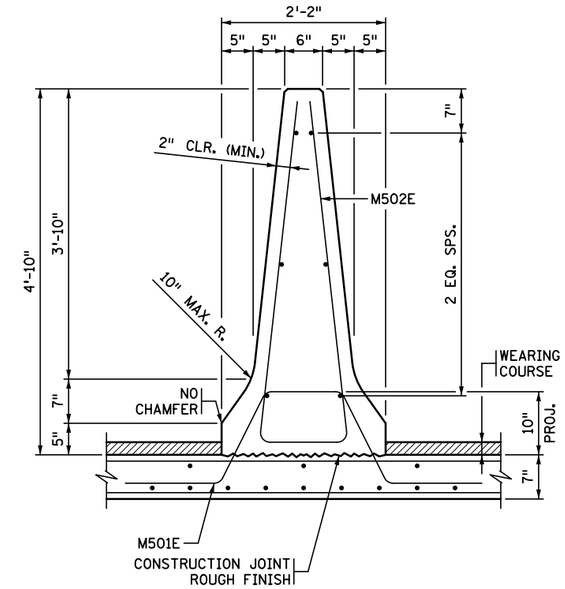

SECTION A-A

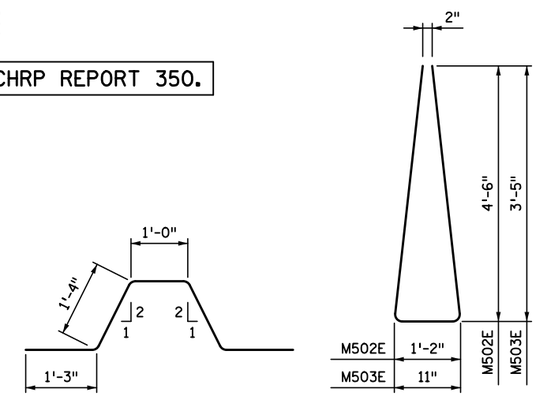

M501E

M502E & M503E

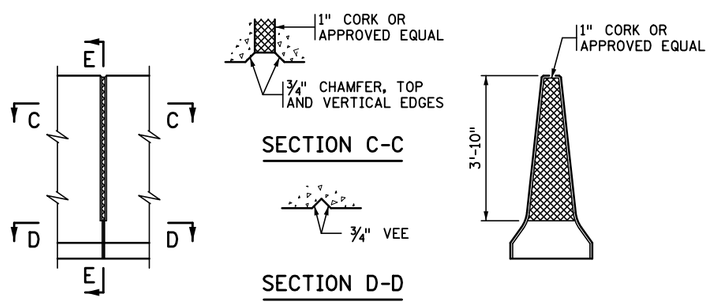

ELEVATION

SECTION C-C

SECTION D-D

SECTION E-E

DEFLECTION JOINT DETAILS

BILL OF REINFORCEMENT FOR BARRIER

BAR	NO.	LENGTH	SHAPE	LOCATION
M501E		4'-11"		BARRIER DOWEL
M502E		9'-8"		BARRIER VERTICAL
M503E		7'-4"		BARRIER VERTICAL
M404E				BARRIER LONGITUDINAL
M405E				BARRIER LONGITUDINAL

GENERAL NOTES

CONCRETE BARRIER SHALL BE CONC. MIX 3Y46 OR 3Y46A.
CONCRETE BARRIER = 817 LBS./FT. (0.202 CU. YDS/FT.)

FINISH ALL EDGES OF BARRIER WITH ½" VEE EXCEPT WHERE OTHERWISE NOTED.

MAXIMUM SPACING OF CONCRETE DEFLECTION JOINTS SHALL BE 20 FT.

SEE SUPERSTRUCTURE SHEET FOR JOINT SPACING.

BARRIER QUANTITIES ARE INCLUDED IN SUMMARY OF QUANTITIES FOR SUPERSTRUCTURE.

(1) USE REINFORCEMENT IN BARRIER WHEN BARRIER IS SUBJECTED TO STAGE CONSTRUCTION TRAFFIC.

REVISED: 04-17-2013

APPROVED: DECEMBER 18, 2003

STATE BRIDGE ENGINEER

CERTIFIED BY _____ LICENSED PROFESSIONAL ENGINEER _____ DATE

NAME: LIC. NO.

TITLE: SOLID MEDIAN BARRIER AND GLARE SCREEN

TYPE F (WITH CONCRETE WEARING COURSE)

DES: DR: CHK: CHK:

APPROVED:

SHEET NO. OF SHEETS

FIG. 5-397.132

BRIDGE NO.

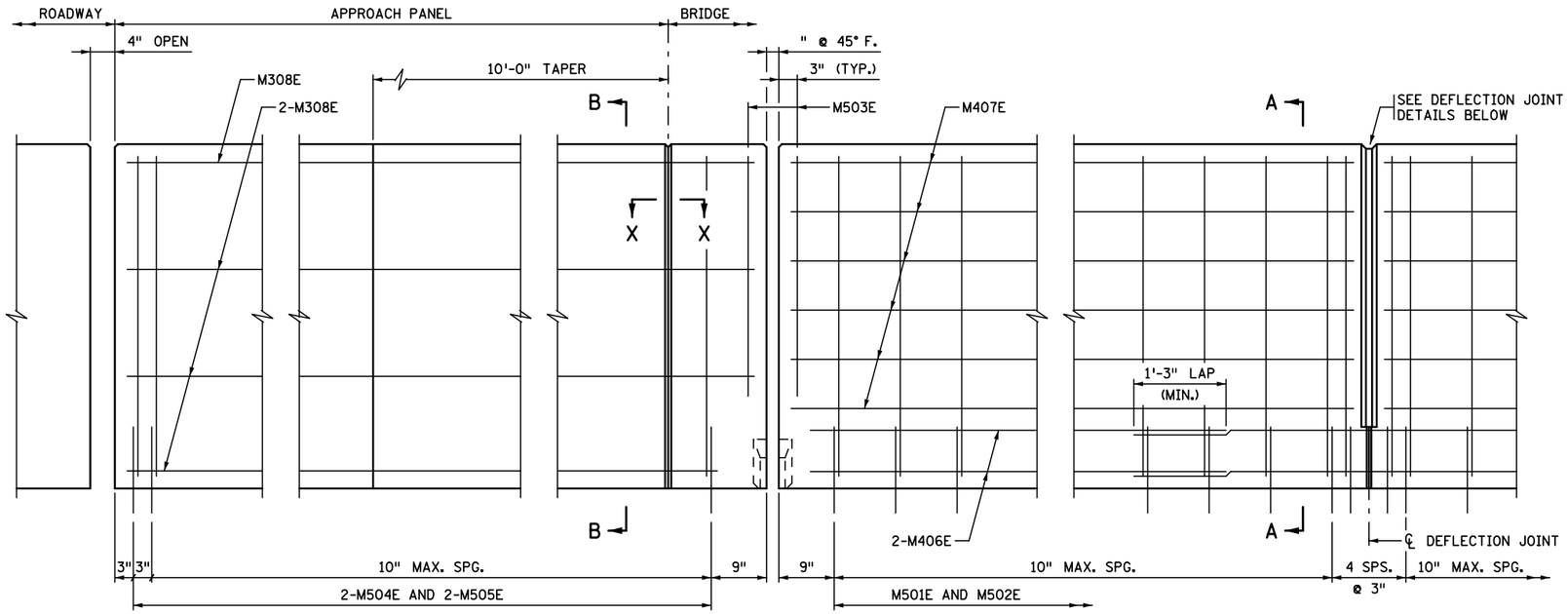

RELIEF JOINT

EXPANSION JOINT

EXPANSION DEVICE NOT SHOWN

DEFLECTION JOINT

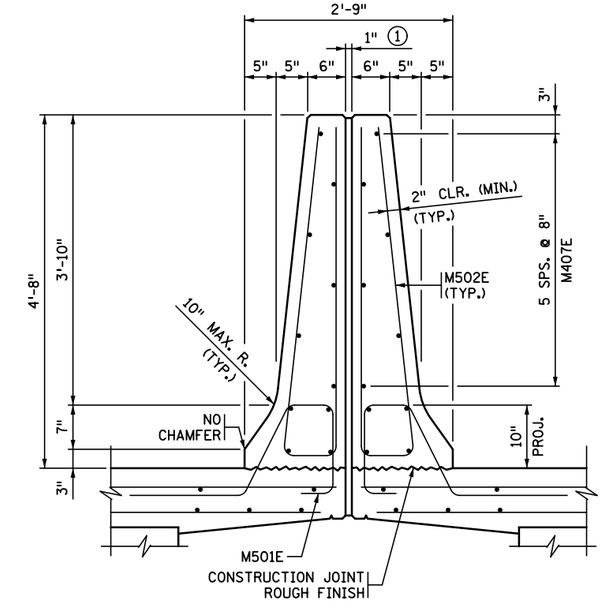

SECTION A-A

INSIDE ELEVATION OF BARRIER

RAIL MEETS TEST LEVEL 4 REQUIREMENTS OF NCHRP REPORT 350.

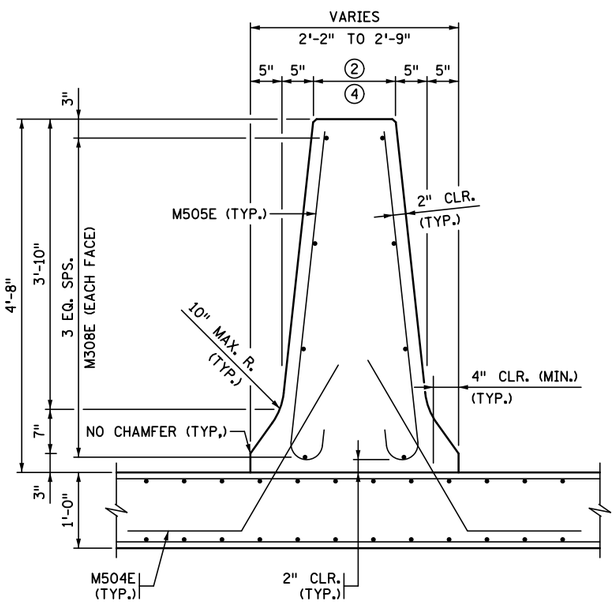

SECTION B-B

CONCRETE APPROACH PANEL

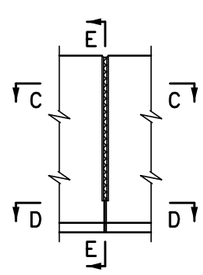

ELEVATION

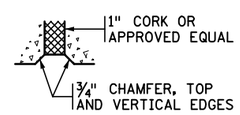

SECTION C-C

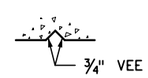

SECTION D-D

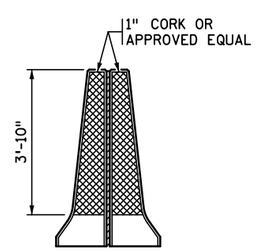

SECTION E-E

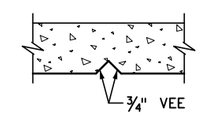

SECTION X-X

APPROACH PANEL JOINT ③

DEFLECTION JOINT DETAILS

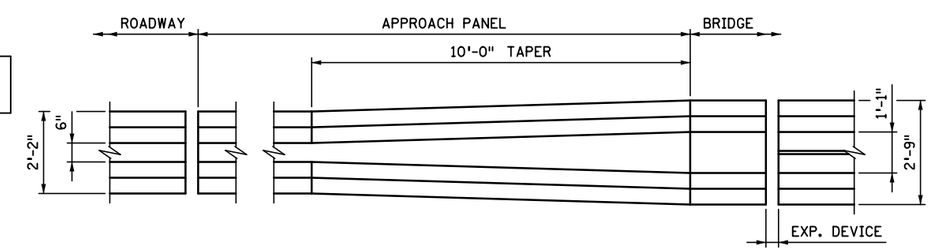

PLAN VIEW OF APPROACH BARRIER

GENERAL NOTES

CONCRETE BARRIER SHALL BE CONC. MIX 3Y46 OR 3Y46A.
CONCRETE BARRIER:
SECTION A-A, BRIDGE BARRIER
1112 LBS./FT. (0.275 CU. YDS./FT.)
SECTION B-B, 10 FT. TAPER ON APPROACH PANEL
9667 LBS. (2.387 CU. YDS.)
SECTION B-B, APPROACH BARRIER BETWEEN ROADWAY AND TAPER
762 LBS./FT. (0.188 CU. YDS./FT.)

FINISH ALL EDGES OF BARRIER WITH ½" VEE, EXCEPT WHERE OTHERWISE NOTED.

MAXIMUM SPACING OF CONCRETE DEFLECTION JOINTS SHALL BE 20 FT.

SEE SUPERSTRUCTURE SHEET FOR JOINT SPACING.

BARRIER QUANTITIES ARE INCLUDED IN SUMMARY OF QUANTITIES FOR SUPERSTRUCTURE.

① POLYSTYRENE, TYPE B. SEE SPECIAL PROVISIONS.

② VARIES FROM 6" AT END OF APPROACH PANEL AND TAPER TO 1'-1" AT END OF BRIDGE. SEE PLAN VIEW OF APPROACH BARRIER.

③ JOINT TO BE ADJACENT TO TRANSVERSE SLAB JOINTS IN APPROACH PANEL WHEN REQUIRED.

④ ONLY ONE M308E IS PLACED AT TOP WHEN DIMENSION IS 8" OR LESS.

BILL OF REINFORCEMENT FOR BARRIER

BAR	NO.	LENGTH	SHAPE	LOCATION
M501E		5'-0"		BARRIER DOWEL
M502E		9'-3"		BARRIER VERTICAL
M503E		7'-0"		BARRIER VERTICAL
M504E		4'-1"		BARRIER DOWEL
M505E		4'-11"		BARRIER VERTICAL
M406E				BARRIER LONGITUDINAL
M407E				BARRIER LONGITUDINAL
M308E				BARRIER LONGITUDINAL

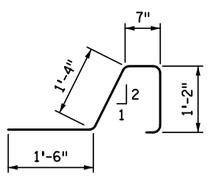

M501E

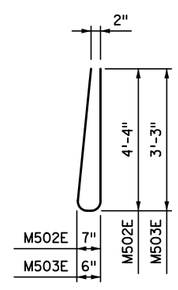

M502E & M503E

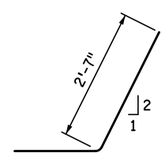

M504E

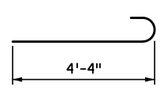

M505E

REVISED: 04-17-2013

APPROVED: APRIL 22, 2004

STATE BRIDGE ENGINEER

CERTIFIED BY _____ LICENSED PROFESSIONAL ENGINEER _____ DATE

NAME: LIC. NO.

TITLE: SPLIT MEDIAN BARRIER AND GLARE SCREEN

TYPE F (WITHOUT CONCRETE WEARING COURSE)

DES: DR: CHK: CHK:

SHEET NO. OF SHEETS

APPROVED:

FIG. 5-397.135

BRIDGE NO.

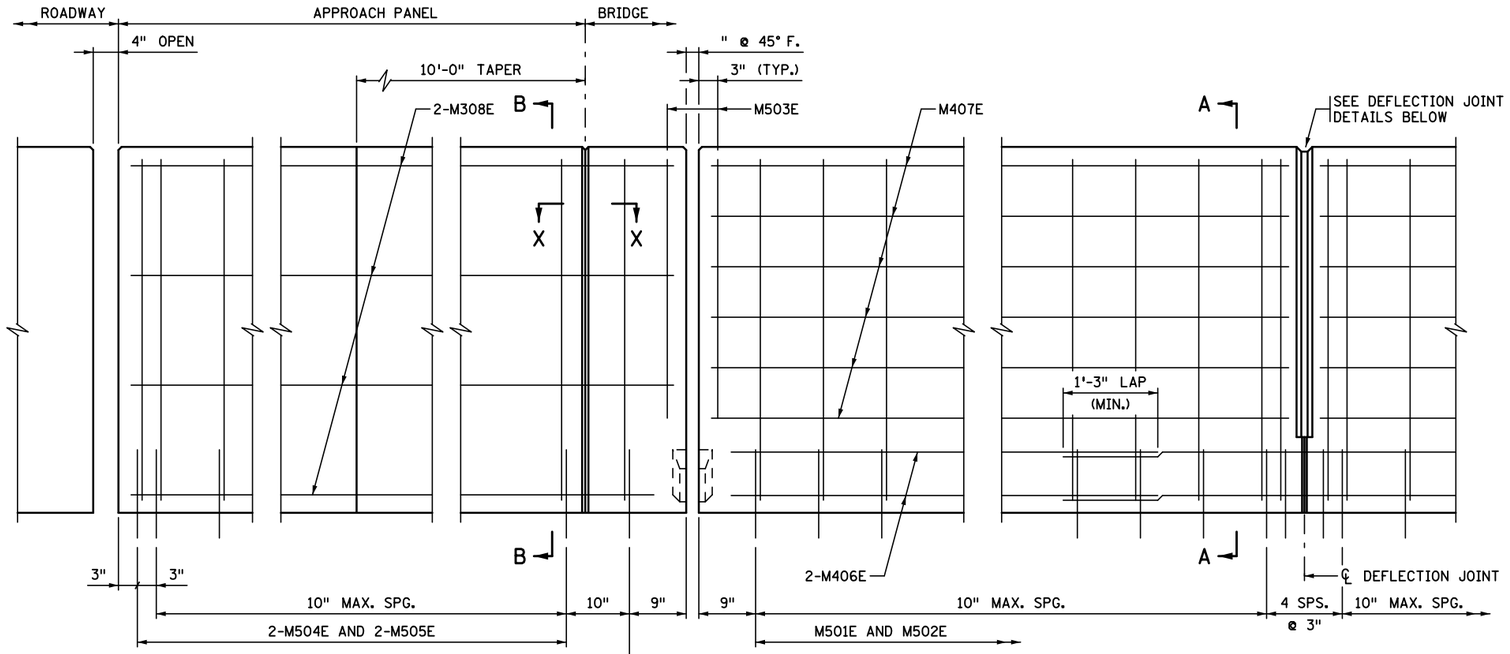

RELIEF JOINT

EXPANSION JOINT

EXPANSION DEVICE NOT SHOWN

DEFLECTION JOINT

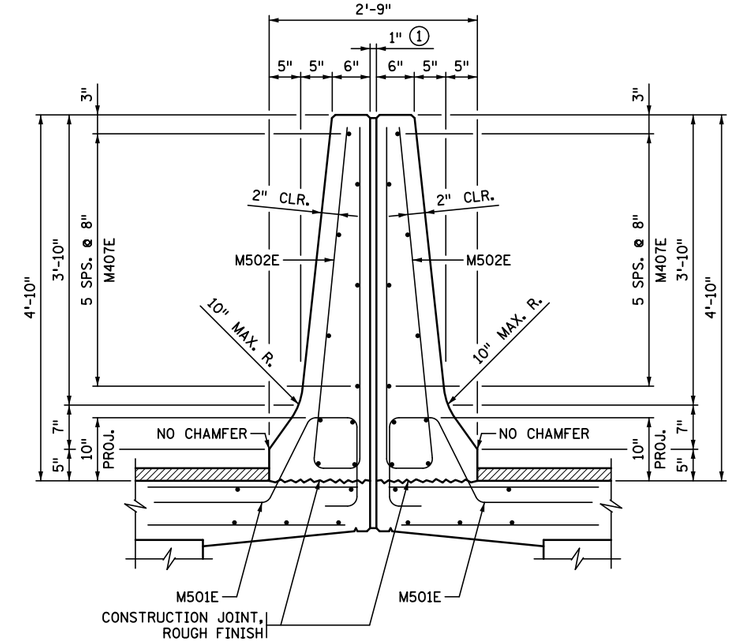

SECTION A-A

INSIDE ELEVATION OF BARRIER

WEARING COURSE NOT SHOWN

RAIL MEETS TEST LEVEL 4 REQUIREMENTS OF NCHRP REPORT 350.

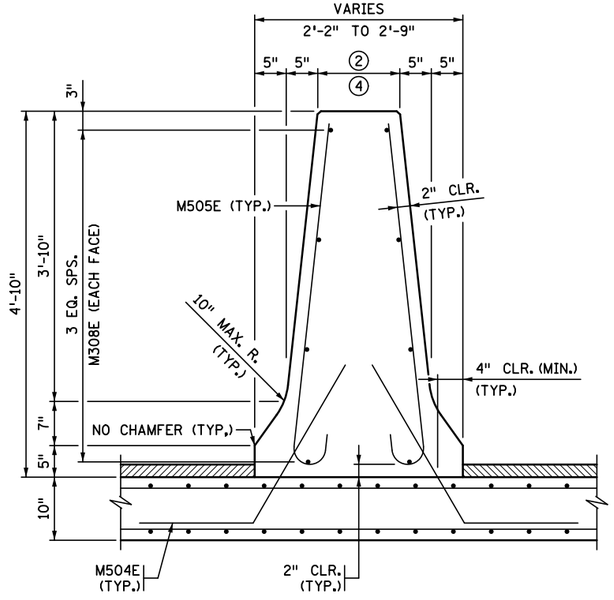

SECTION B-B

BITUMINOUS OR CONCRETE WEARING COURSE

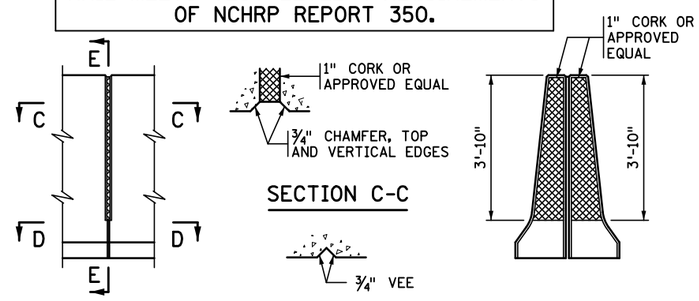

ELEVATION

SECTION C-C

SECTION D-D

SECTION E-E

DEFLECTION JOINT DETAILS

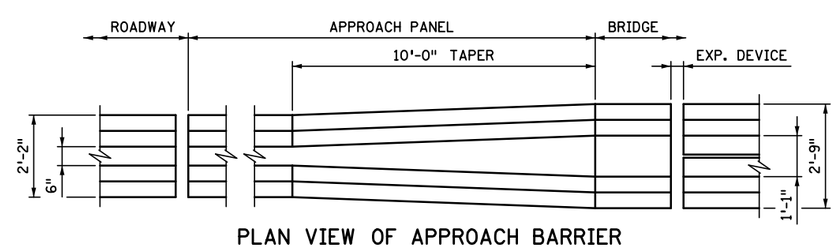

PLAN VIEW OF APPROACH BARRIER

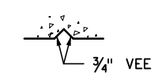

SECTION X-X

APPROACH PANEL JOINT ③

GENERAL NOTES

CONCRETE BARRIER SHALL BE CONC. MIX 3Y46 OR 3Y46A.
CONCRETE BARRIER:
SECTION A-A, BRIDGE BARRIER
1179 LBS./FT. (0.291 CU. YDS./FT.)
SECTION B-B, 10 FT. TAPER ON APPROACH PANEL
10,283 LBS. (2.539 CU. YDS.)
SECTION B-B, APPROACH BARRIER BETWEEN ROADWAY AND TAPER
817 LBS./FT. (0.202 CU. YDS./FT.)

FINISH ALL EDGES OF BARRIER WITH ½" VEE, EXCEPT WHERE OTHERWISE NOTED.

MAXIMUM SPACING OF CONCRETE DEFLECTION JOINTS SHALL BE 20 FT.

SEE SUPERSTRUCTURE SHEET FOR JOINT SPACING.

BARRIER QUANTITIES ARE INCLUDED IN SUMMARY OF QUANTITIES FOR SUPERSTRUCTURE.

① POLYSTYRENE, TYPE B. SEE SPECIAL PROVISIONS.

② VARIES FROM 6" AT END OF APPROACH PANEL AND TAPER TO 1'-1" AT END OF BRIDGE. SEE PLAN VIEW OF APPROACH BARRIER.

③ JOINT TO BE ADJACENT TO TRANSVERSE SLAB JOINTS IN APPROACH PANEL WHEN REQUIRED.

④ ONLY ONE M308E IS PLACED AT TOP WHEN DIMENSION IS 8" OR LESS.

BILL OF REINFORCEMENT FOR BARRIER

BAR	NO.	LENGTH	SHAPE	LOCATION
M501E		4'-11"		BARRIER DOWEL
M502E		9'-8"		BARRIER VERTICAL
M503E		7'-4"		BARRIER VERTICAL
M504E		3'-11"		BARRIER DOWEL
M505E		5'-0"		BARRIER VERTICAL
M406E		'- "		BARRIER LONGITUDINAL
M407E		'- "		BARRIER LONGITUDINAL
M308E		'- "		BARRIER LONGITUDINAL

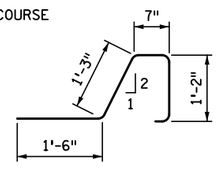

M501E

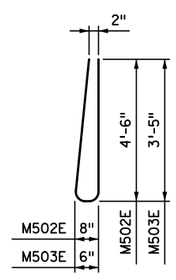

M502E & M503E

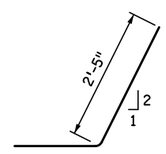

M504E

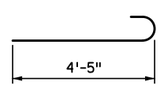

M505E

REVISED: 04-17-2013

APPROVED: APRIL 22, 2004

STATE BRIDGE ENGINEER

CERTIFIED BY _____ LICENSED PROFESSIONAL ENGINEER _____ DATE

NAME: LIC. NO.

TITLE: SPLIT MEDIAN BARRIER AND GLARE SCREEN

TYPE F (WITH CONCRETE WEARING COURSE)

DES: DR: CHK: CHK:

SHEET NO. OF SHEETS

APPROVED:

FIG. 5-397.136

BRIDGE NO.

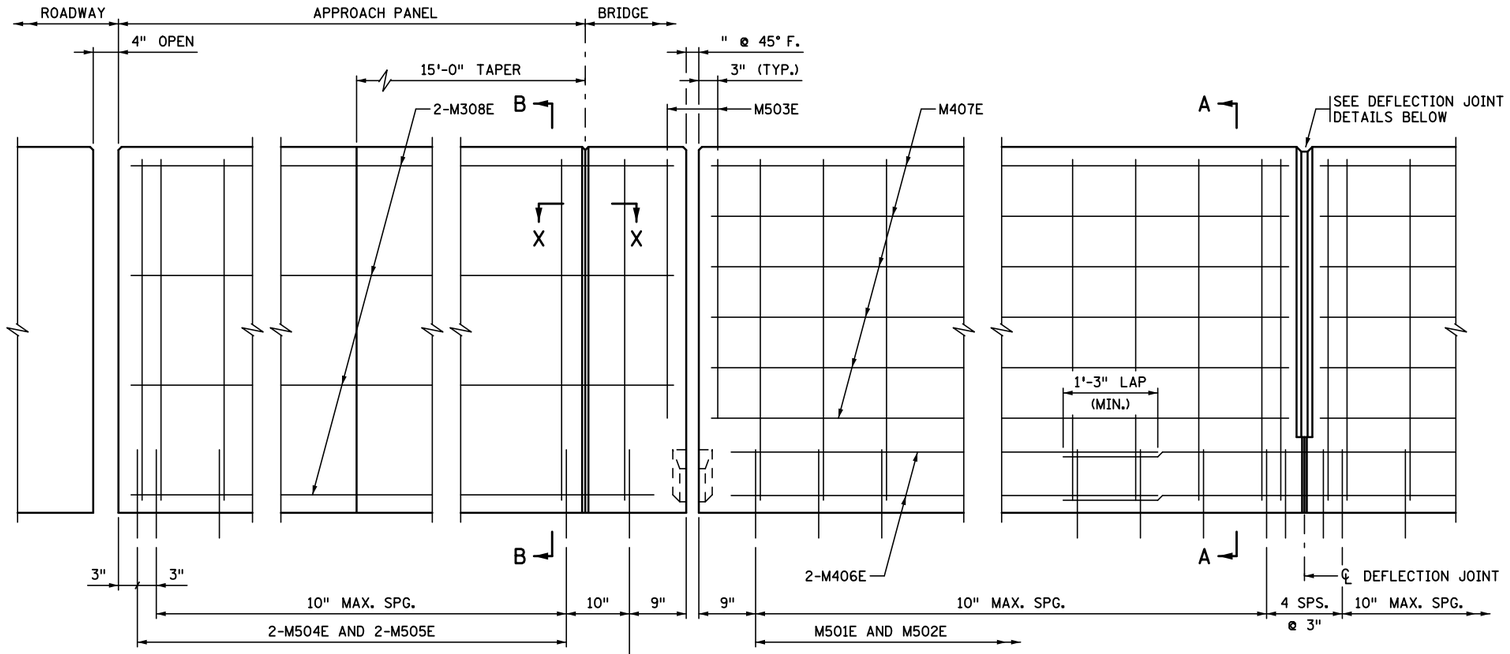

RELIEF JOINT

EXPANSION JOINT

EXPANSION DEVICE NOT SHOWN

DEFLECTION JOINT

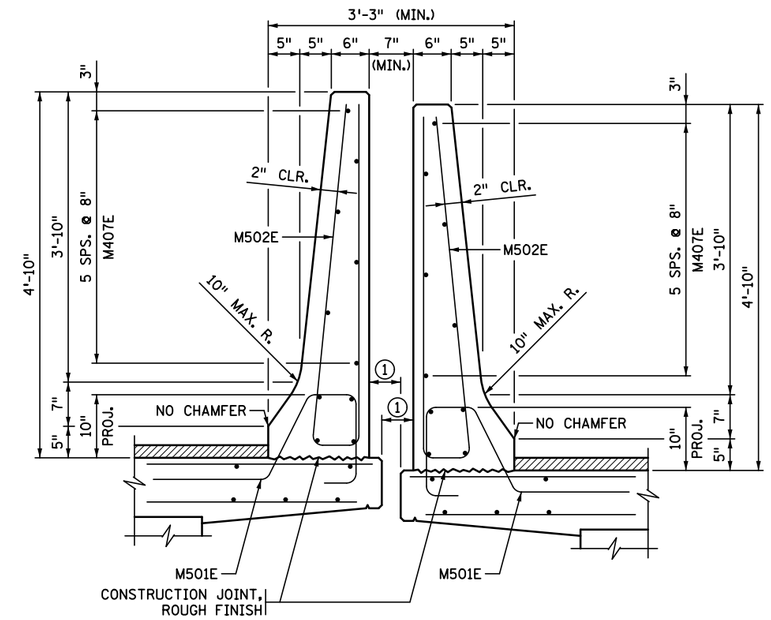

SECTION A-A

INSIDE ELEVATION OF BARRIER

WEARING COURSE NOT SHOWN

RAIL MEETS TEST LEVEL 4 REQUIREMENTS OF NCHRP REPORT 350.

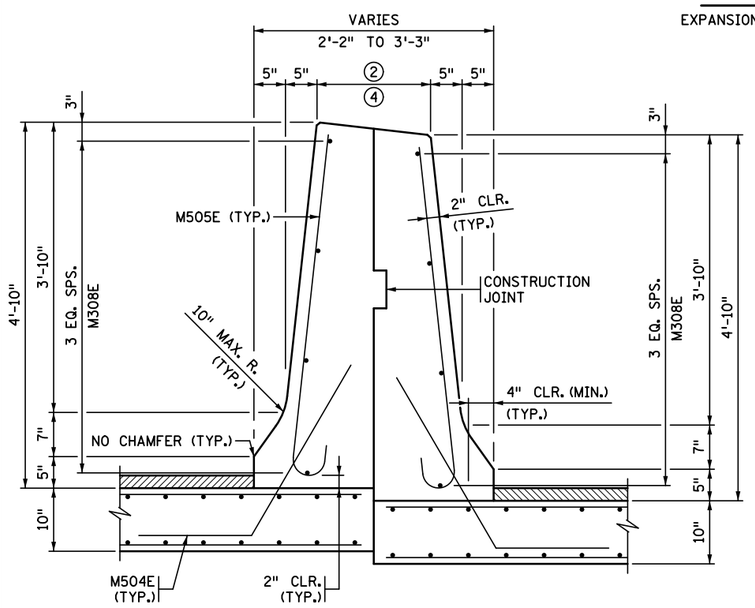

SECTION B-B

BITUMINOUS OR CONCRETE WEARING COURSE

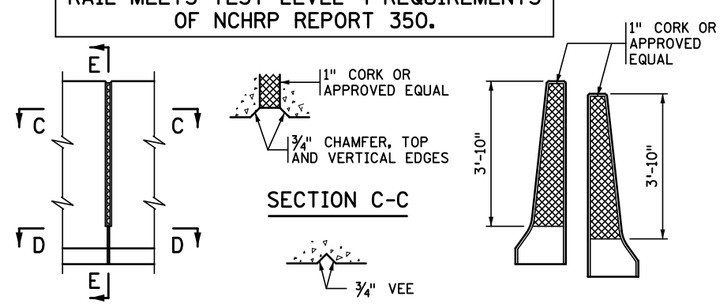

ELEVATION

SECTION C-C

SECTION D-D

SECTION E-E

DEFLECTION JOINT DETAILS

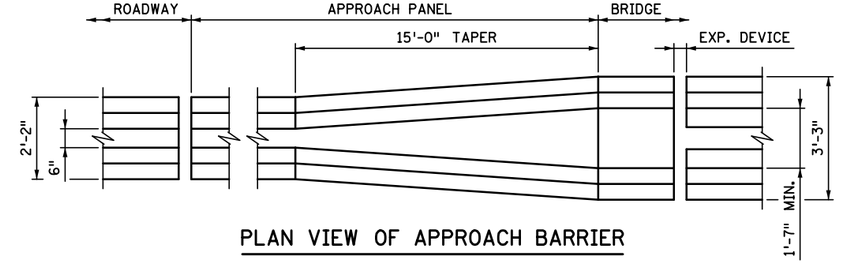

PLAN VIEW OF APPROACH BARRIER

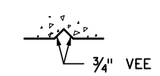

SECTION X-X

APPROACH PANEL JOINT ③

GENERAL NOTES

CONCRETE BARRIER SHALL BE CONC. MIX 3Y46 OR 3Y46A.
CONCRETE BARRIER:
SECTION A-A, BRIDGE BARRIER
1179 LBS./FT. (0.291 CU. YDS./FT.)
SECTION B-B, 15 FT. TAPER ON APPROACH PANEL
VARIES
SECTION B-B, APPROACH BARRIER BETWEEN ROADWAY AND TAPER
VARIES

FINISH ALL EDGES OF BARRIER WITH ½" VEE, EXCEPT WHERE OTHERWISE NOTED.

MAXIMUM SPACING OF CONCRETE DEFLECTION JOINTS SHALL BE 20 FT.

SEE SUPERSTRUCTURE SHEET FOR JOINT SPACING.

BARRIER QUANTITIES ARE INCLUDED IN SUMMARY OF QUANTITIES FOR SUPERSTRUCTURE.

① 5" MINIMUM.

② VARIES FROM 6" AT END OF APPROACH PANEL AND TAPER TO 1'-7" AT END OF BRIDGE. SEE PLAN VIEW OF APPROACH BARRIER.

③ JOINT TO BE ADJACENT TO TRANSVERSE SLAB JOINTS IN APPROACH PANEL WHEN REQUIRED.

④ ONLY ONE M308E IS PLACED AT TOP WHEN DIMENSION IS 8" OR LESS.

BILL OF REINFORCEMENT FOR BARRIER

BAR	NO.	LENGTH	SHAPE	LOCATION
M501E		4'-11"		BARRIER DOWEL
M502E		9'-8"		BARRIER VERTICAL
M503E		7'-4"		BARRIER VERTICAL
M504E		4'-1"		BARRIER DOWEL
M505E		5'-0"		BARRIER VERTICAL
M406E		'- "		BARRIER LONGITUDINAL
M407E		'- "		BARRIER LONGITUDINAL
M308E		'- "		BARRIER LONGITUDINAL

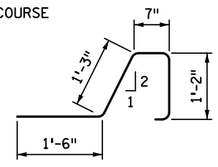

M501E

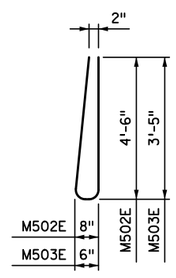

M502E & M503E

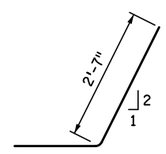

M504E

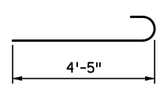

M505E

REVISED: 04-17-2013

APPROVED: APRIL 22, 2004

STATE BRIDGE ENGINEER

CERTIFIED BY

LICENSED PROFESSIONAL ENGINEER DATE

NAME: LIC. NO.

TITLE: OFFSET SPLIT MEDIAN BARRIER AND GLARE SCREEN

TYPE F (WITH CONCRETE WEARING COURSE)

DES: DR: CHK: CHK:

SHEET NO. OF SHEETS

APPROVED:

FIG. 5-397.137

BRIDGE NO.

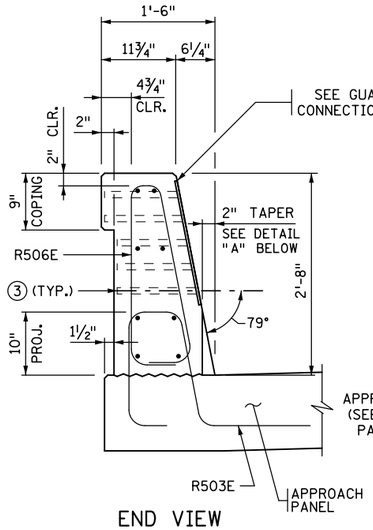

END VIEW

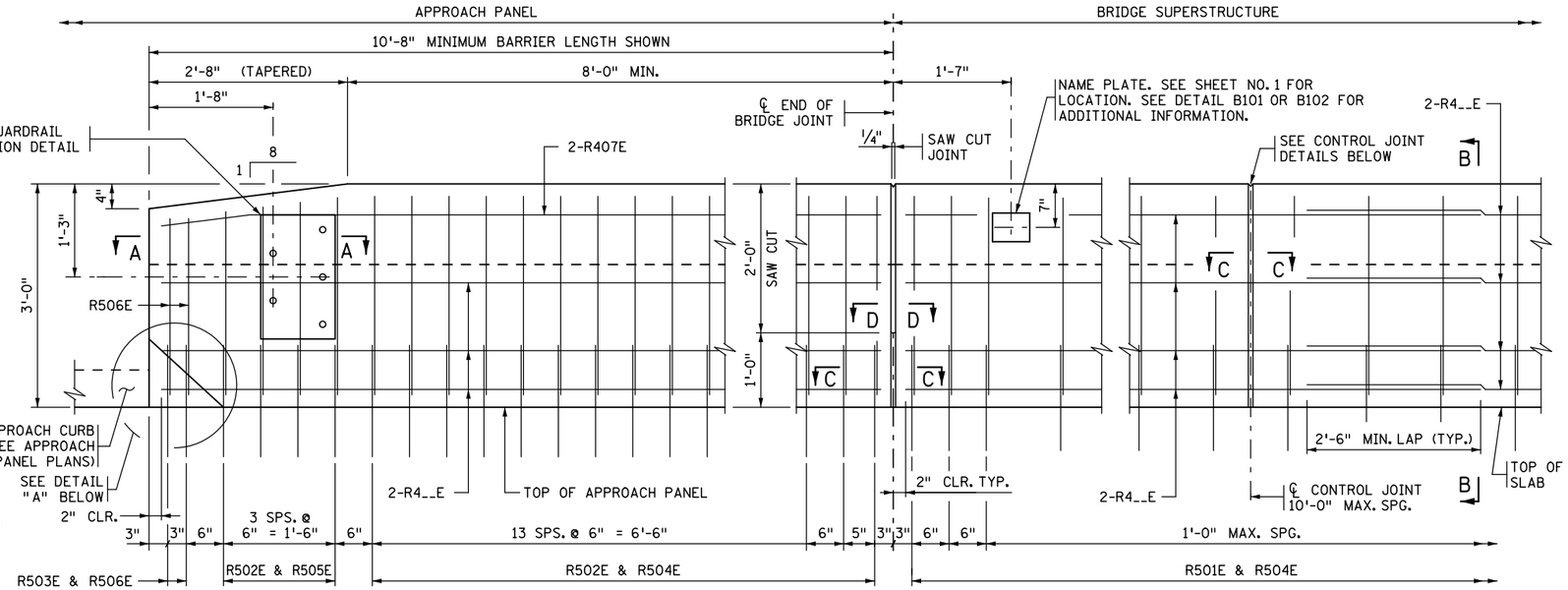

JOINT AT ABUTMENT

(INTEGRAL OR SEMI-INTEGRAL ABUTMENT)

CONTROL JOINT

INSIDE ELEVATION OF BARRIER

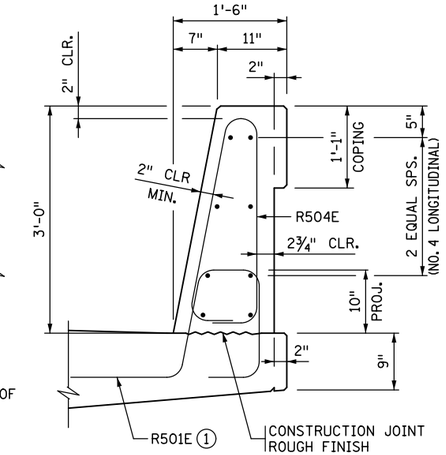

SECTION B-B

DESIGNER NOTE
(REMOVE PRIOR TO PLOTTING FINAL PLAN):

MINIMUM BARRIER LENGTH ON APPROACH PANEL IS 10'-8" WITH MINIMUM OF 22 R502E AND R503E DOWELS WITH ACCOMPANYING APPROPRIATE BARRIER VERTICAL BARS, 12" MAX. SPACING.
VERIFY APPROACH BARRIER LENGTH, NEED FOR A GUARDRAIL CONNECTION, AND VERTICAL TAPER WITH ROADWAY DESIGNER.
REFER TO MEMO TO DESIGNERS (2016-01) FOR ADDITIONAL REQUIREMENTS REGARDING BARRIER PLACEMENT.

BARRIER MEETS NCHRP 350 TL-4 REQUIREMENTS ON BRIDGE DECK AND TL-3 ON APPROACH PANEL.

BILL OF REINFORCEMENT FOR BARRIER				
BAR	NO.	LENGTH	SHAPE	LOCATION
R501E		5'-7"		BARRIER DOWEL
R502E		5'-9"		BARRIER DOWEL
R503E		5'-8"		BARRIER DOWEL
R504E		7'-1"		BARRIER VERTICAL
R505E	-- SER. OF 4	6'-7" TO 6'-11"		BARRIER VERTICAL
R506E		6'-5"		BARRIER VERTICAL
R407E		10'-3"		BARRIER LONGIT.
R4__E				BARRIER LONGIT.
R4__E				BARRIER LONGIT.
R4__E				BARRIER LONGIT.
R4__E				BARRIER LONGIT.
R4__E				BARRIER LONGIT.

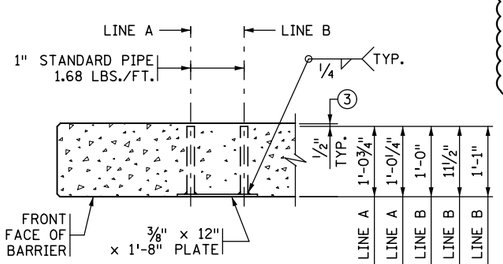

SECTION A-A

(REINFORCEMENT NOT SHOWN)

TRIM GUARDRAIL BOLTS SUCH THAT NO MORE THAN 1½" PROTRUDES FROM BACK FACE OF BARRIER.

☆ DIMENSIONS INCLUDE ⅜" PLATE

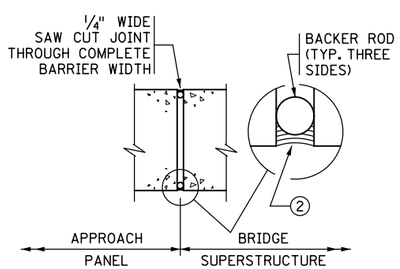

SECTION D-D

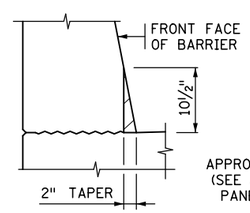

VIEW F-F

AT BARRIER END

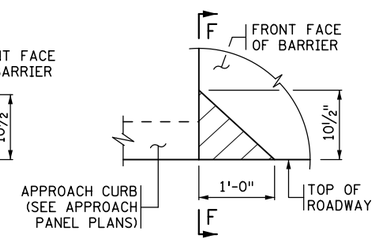

DETAIL "A"

ELEVATION VIEW

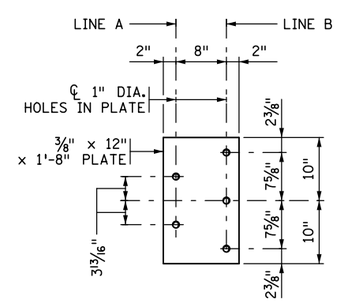

GUARDRAIL CONNECTION DETAIL

GALVANIZE AFTER FABRICATION PER SPEC. 3394
ESTIMATED WEIGHT = 34 LBS.

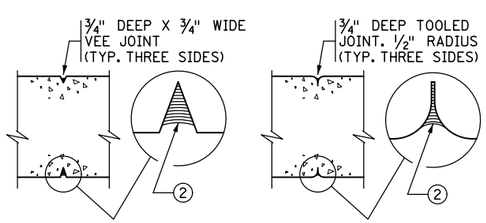

SECTION C-C

CONTRACTOR OPTION 1

SECTION C-C

CONTRACTOR OPTION 2

CONTROL JOINT DETAILS

WHEN USING SLIP FORM METHOD TO PLACE THE CONCRETE, CUT JOINT 3 INCHES DEEP USING MARGIN TROWEL OR SIMILAR MEANS IMMEDIATELY AFTER CONCRETE PLACEMENT (TYP. THREE SIDES).

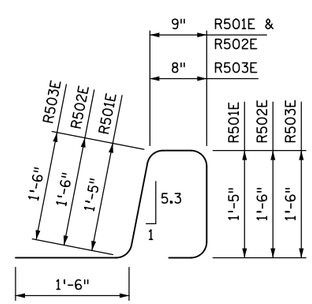

R501E, R502E, R503E

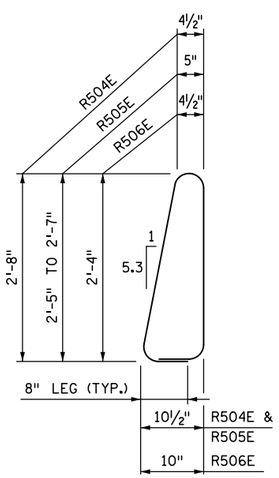

R504E, R505E, R506E

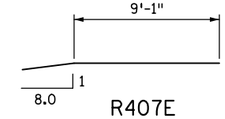

R407E

GENERAL NOTES

MEASURE PAYMENT LENGTH BETWEEN THE OUTSIDE ENDS OF THE BARRIER.

CONCRETE BARRIER = 496 LBS./FT. (0.123 CU. YDS./FT.)

FINISH ALL EDGES OF BARRIER WITH ½" CHAMFER, EXCEPT WHERE OTHERWISE NOTED.

SPACE CONTROL JOINTS AT 10 FT. MAXIMUM. REFER TO SUPERSTRUCTURE SHEET FOR SPECIFIC SPACING INFORMATION.

GUARDRAIL CONNECTION TO BE STRUCTURAL STEEL, SPEC. 3306.

GUARDRAIL CONNECTION AND NAME PLATE TO BE CONSIDERED INCIDENTAL TO BARRIER.

BARRIER QUANTITIES ARE LISTED IN SUMMARY OF QUANTITIES FOR SUPERSTRUCTURE.

① PLACE BAR ON TOP OF BOTTOM REINFORCEMENT MAT IN DECK.

② JOINT SEALANT PER MnDOT APPROVED/QUALIFIED PRODUCTS LIST - CRACK AND JOINT MATERIALS - SILICONE JOINT SEALERS.

③ REMOVE CONCRETE FROM PIPE ENDS AFTER SLIPFORMING OR FORM REMOVAL.

REVISION:

APPROVED: AUGUST 24, 2016
Kevin Western
STATE BRIDGE ENGINEER

CERTIFIED BY _____ LICENSED PROFESSIONAL ENGINEER _____ DATE
NAME: LIC. NO.

TITLE: SINGLE SLOPE CONCRETE BARRIER 36" (TYPE S, TL-4)
INTEGRAL OR SEMI-INTEGRAL ABUTMENT WITH GUARDRAIL CONNECTION (WITHOUT CONCRETE WEARING COURSE)

DES: DR: CHK: CHK:

SHEET NO. OF SHEETS

FIG. 5-397.138(A)

APPROVED:

BRIDGE NO.

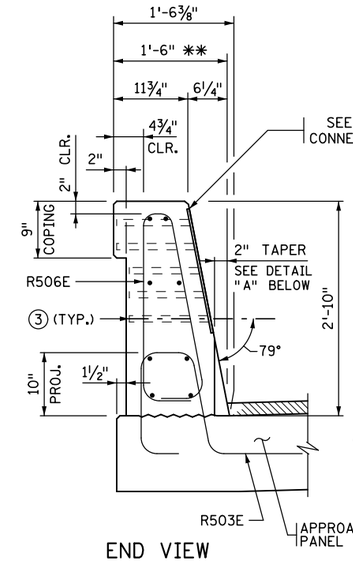

END VIEW

✱✱ DIMENSION SHOWN IS TO THE TOP OF THE WEARING COURSE AT GUTTERLINE.

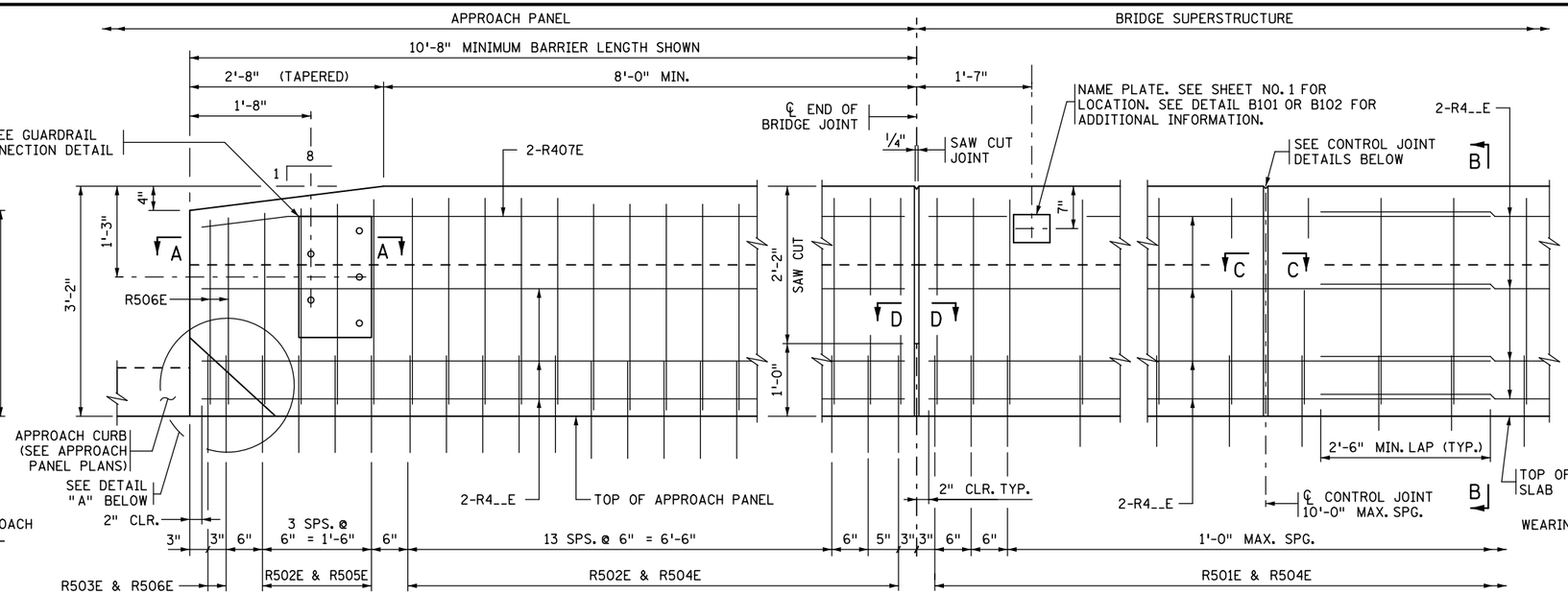

JOINT AT ABUTMENT

(INTEGRAL OR SEMI-INTEGRAL ABUTMENT)

CONTROL JOINT

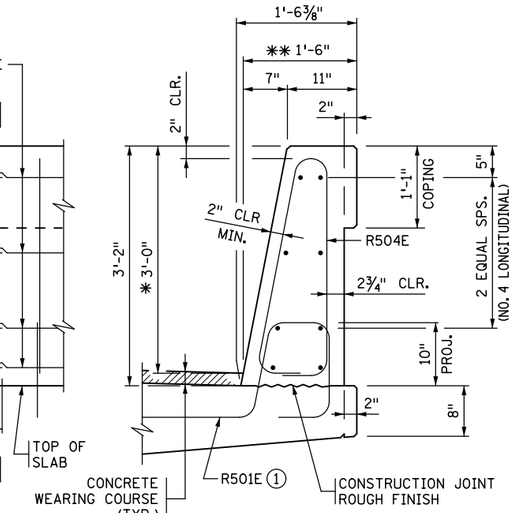

SECTION B-B

✱✱ DIMENSION SHOWN IS TO THE TOP OF THE WEARING COURSE AT GUTTERLINE.

DESIGNER NOTE
(REMOVE PRIOR TO PLOTTING FINAL PLAN):

MINIMUM BARRIER LENGTH ON APPROACH PANEL IS 10'-8" WITH MINIMUM OF 22 R502E AND R503E DOWELS WITH ACCOMPANYING APPROPRIATE BARRIER VERTICAL BARS, 12" MAX. SPACING.
VERIFY APPROACH BARRIER LENGTH, NEED FOR A GUARDRAIL CONNECTION, AND VERTICAL TAPER WITH ROADWAY DESIGNER.
REFER TO MEMO TO DESIGNERS (2016-01) FOR ADDITIONAL REQUIREMENTS REGARDING BARRIER PLACEMENT.

INSIDE ELEVATION OF BARRIER

CONCRETE WEARING COURSE NOT SHOWN

BARRIER MEETS NCHRP 350 TL-4 REQUIREMENTS ON BRIDGE DECK AND TL-3 ON APPROACH PANEL.

BILL OF REINFORCEMENT FOR BARRIER

BAR	NO.	LENGTH	SHAPE	LOCATION
R501E		5'-4"		BARRIER DOWEL
R502E		5'-6"		BARRIER DOWEL
R503E		5'-5"		BARRIER DOWEL
R504E		7'-5"		BARRIER VERTICAL
R505E	-- SER. OF 4	6'-11" TO 7'-3"		BARRIER VERTICAL
R506E		6'-9"		BARRIER VERTICAL
R407E		10'-3"		BARRIER LONGIT.
R4__E				BARRIER LONGIT.
R4__E				BARRIER LONGIT.
R4__E				BARRIER LONGIT.
R4__E				BARRIER LONGIT.
R4__E				BARRIER LONGIT.

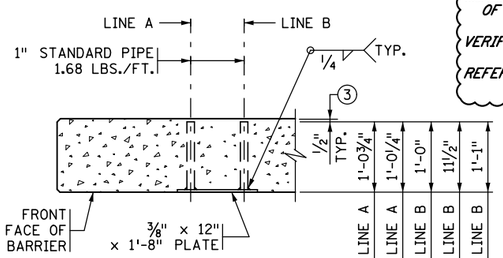

SECTION A-A

(REINFORCEMENT NOT SHOWN)

TRIM GUARDRAIL BOLTS SUCH THAT NO MORE THAN 1½" PROTRUDES FROM BACK FACE OF BARRIER.

☆ DIMENSIONS INCLUDE ⅜" PLATE

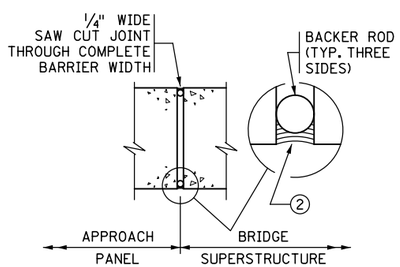

SECTION D-D

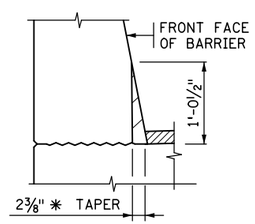

VIEW F-F

AT BARRIER END

✱ AT TOP OF STRUCTURAL SLAB

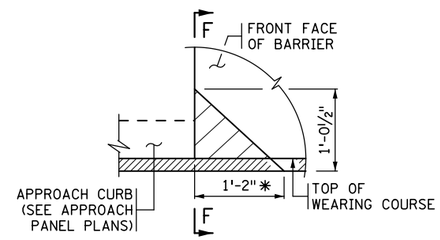

DETAIL "A"

ELEVATION VIEW

(WEARING COURSE SHOWN)

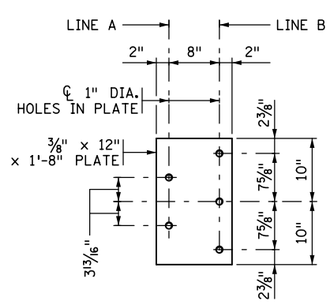

GUARDRAIL CONNECTION DETAIL

GALVANIZE AFTER FABRICATION PER SPEC. 3394
ESTIMATED WEIGHT = 34 LBS.

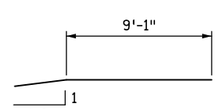

R407E

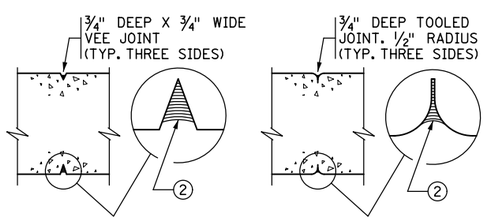

SECTION C-C

CONTRACTOR OPTION 1

SECTION C-C

CONTRACTOR OPTION 2

CONTROL JOINT DETAILS

WHEN USING SLIP FORM METHOD TO PLACE THE CONCRETE, CUT JOINT 3 INCHES DEEP USING MARGIN TROWEL OR SIMILAR MEANS IMMEDIATELY AFTER CONCRETE PLACEMENT (TYP. THREE SIDES).

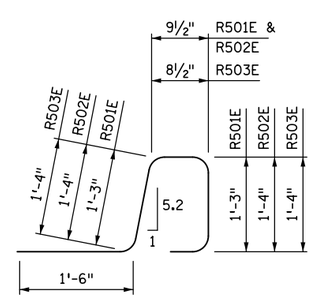

R501E, R502E, R503E

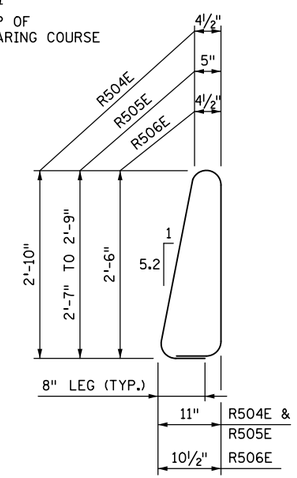

R504E, R505E, R506E

GENERAL NOTES

MEASURE PAYMENT LENGTH BETWEEN THE OUTSIDE ENDS OF THE BARRIER.

CONCRETE BARRIER = 530 LBS./FT. (0.131 CU. YDS./FT.)

FINISH ALL EDGES OF BARRIER WITH ½" CHAMFER, EXCEPT WHERE OTHERWISE NOTED.

SPACE CONTROL JOINTS AT 10 FT. MAXIMUM. REFER TO SUPERSTRUCTURE SHEET FOR SPECIFIC SPACING INFORMATION.

GUARDRAIL CONNECTION TO BE STRUCTURAL STEEL, SPEC. 3306.

GUARDRAILCONNECTION AND NAME PLATE TO BE CONSIDERED INCIDENTAL TO BARRIER.

BARRIER QUANTITIES ARE LISTED IN SUMMARY OF QUANTITIES FOR SUPERSTRUCTURE.

① PLACE BAR ON TOP OF BOTTOM REINFORCEMENT MAT IN DECK.

② JOINT SEALANT PER MnDOT APPROVED/QUALIFIED PRODUCTS LIST - CRACK AND JOINT MATERIALS - SILICONE JOINT SEALERS.

③ REMOVE CONCRETE FROM PIPE ENDS AFTER SLIPFORMING OR FORM REMOVAL.

REVISION:

APPROVED: AUGUST 24, 2016
Kevin Western
STATE BRIDGE ENGINEER

CERTIFIED BY _____ LICENSED PROFESSIONAL ENGINEER _____ DATE
NAME: LIC. NO.

TITLE: SINGLE SLOPE CONCRETE BARRIER 36" (TYPE S, TL-4)
INTEGRAL OR SEMI-INTEGRAL ABUTMENT WITH GUARDRAIL CONNECTION (WITH 2" CONCRETE WEARING COURSE)

DES: DR: CHK: CHK:

SHEET NO. OF SHEETS

FIG. 5-397.138(B)

APPROVED:

BRIDGE NO.

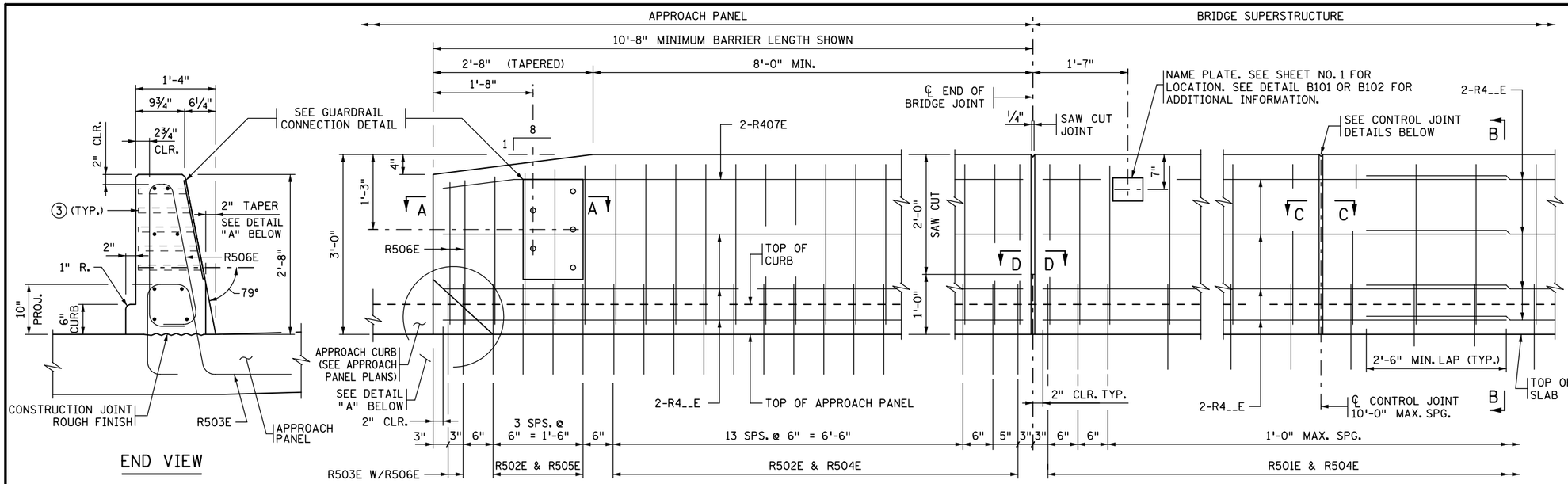

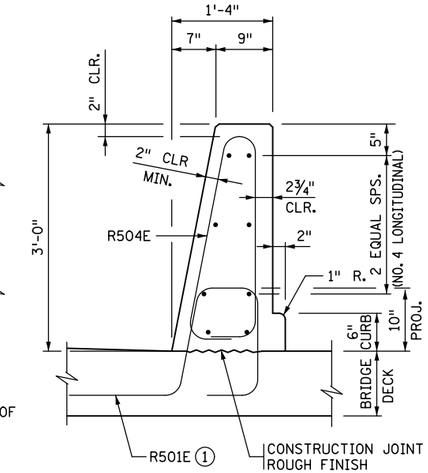

SECTION B-B

DESIGNER NOTE
(REMOVE PRIOR TO PLOTTING FINAL PLAN):

MINIMUM BARRIER LENGTH ON APPROACH PANEL IS 10'-8" WITH MINIMUM OF 22 R502E AND R503E DOWELS WITH ACCOMPANYING APPROPRIATE BARRIER VERTICAL BARS, 12" MAX. SPACING.
VERIFY APPROACH BARRIER LENGTH, NEED FOR A GUARDRAIL CONNECTION, AND VERTICAL TAPER WITH ROADWAY DESIGNER.
REFER TO MEMO TO DESIGNERS (2016-01) FOR ADDITIONAL REQUIREMENTS REGARDING BARRIER PLACEMENT.

BARRIER MEETS NCHRP 350 TL-4 REQUIREMENTS ON BRIDGE DECK AND TL-3 ON APPROACH PANEL.

BILL OF REINFORCEMENT FOR BARRIER

BAR	NO.	LENGTH	SHAPE	LOCATION
R501E		5'-7"		BARRIER DOWEL
R502E		5'-9"		BARRIER DOWEL
R503E		5'-8"		BARRIER DOWEL
R504E		7'-1"		BARRIER VERTICAL
R505E	-- SER. OF 4	6'-7" TO 6'-11"		BARRIER VERTICAL
R506E		6'-5"		BARRIER VERTICAL
R407E		10'-3"		BARRIER LONGIT.
R4__E				BARRIER LONGIT.
R4__E				BARRIER LONGIT.
R4__E				BARRIER LONGIT.
R4__E				BARRIER LONGIT.
R4__E				BARRIER LONGIT.

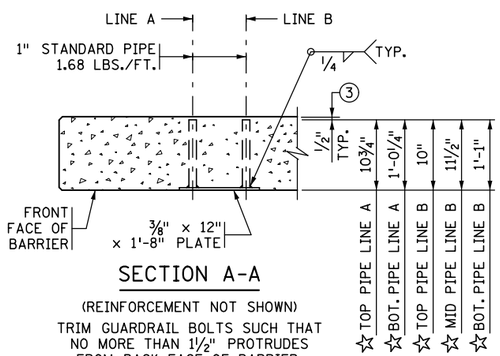

SECTION A-A

(REINFORCEMENT NOT SHOWN)

TRIM GUARDRAIL BOLTS SUCH THAT NO MORE THAN 1½" PROTRUDES FROM BACK FACE OF BARRIER.

☆ DIMENSIONS INCLUDE ⅜" PLATE

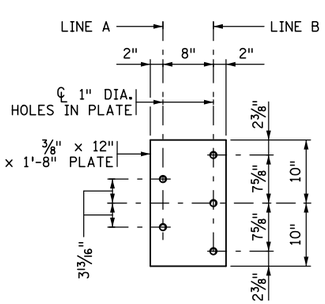

GUARDRAIL CONNECTION DETAIL

GALVANIZE AFTER FABRICATION PER SPEC. 3394
ESTIMATED WEIGHT = 34 LBS.

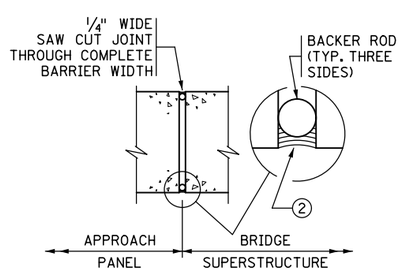

SECTION D-D

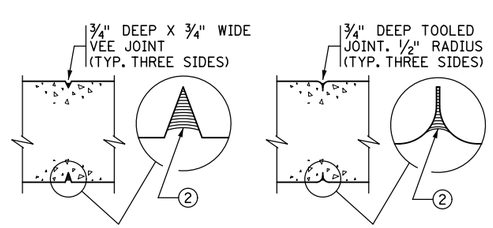

SECTION C-C
CONTRACTOR OPTION 1

SECTION C-C
CONTRACTOR OPTION 2

CONTROL JOINT DETAILS

WHEN USING SLIP FORM METHOD TO PLACE THE CONCRETE, CUT JOINT 3 INCHES DEEP USING MARGIN TROWEL OR SIMILAR MEANS IMMEDIATELY AFTER CONCRETE PLACEMENT (TYP. THREE SIDES).

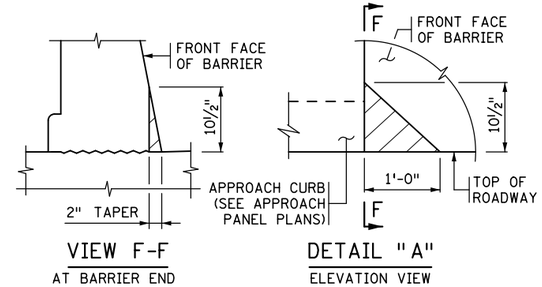

VIEW F-F
AT BARRIER END

DETAIL "A"
ELEVATION VIEW

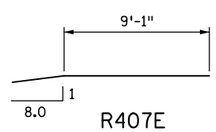

R407E

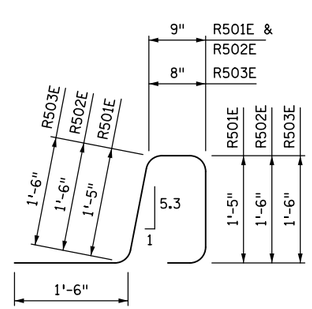

R501E, R502E, R503E

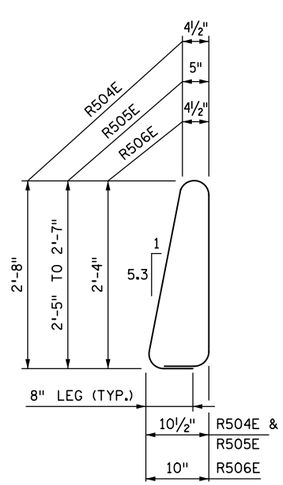

R504E, R505E, R506E

GENERAL NOTES

MEASURE PAYMENT LENGTH BETWEEN THE OUTSIDE ENDS OF THE BARRIER.

CONCRETE BARRIER = 481 LBS./FT. (0.119 CU. YDS./FT.)

FINISH ALL EDGES OF BARRIER WITH ½" CHAMFER, EXCEPT WHERE OTHERWISE NOTED.

SPACE CONTROL JOINTS AT 10 FT. MAXIMUM. REFER TO SUPERSTRUCTURE SHEET FOR SPECIFIC SPACING INFORMATION.

GUARDRAIL CONNECTION TO BE STRUCTURAL STEEL, SPEC. 3306.

GUARDRAIL CONNECTION AND NAME PLATE TO BE CONSIDERED INCIDENTAL TO BARRIER.

BARRIER QUANTITIES ARE LISTED IN SUMMARY OF QUANTITIES FOR SUPERSTRUCTURE.

① PLACE BAR ON TOP OF BOTTOM REINFORCEMENT MAT IN DECK.
② JOINT SEALANT PER MnDOT APPROVED/QUALIFIED PRODUCTS LIST - CRACK AND JOINT MATERIALS - SILICONE JOINT SEALERS.
③ REMOVE CONCRETE FROM PIPE ENDS AFTER SLIPFORMING OR FORM REMOVAL.

REVISION:

APPROVED: AUGUST 24, 2016
Kevin Western
STATE BRIDGE ENGINEER

CERTIFIED BY _____ LICENSED PROFESSIONAL ENGINEER _____ DATE
NAME: LIC. NO.

TITLE: SINGLE SLOPE CONCRETE BARRIER 36" (TYPE S, TL-4)
INTEGRAL OR SEMI-INTEGRAL ABUTMENT WITH BRIDGE SLAB SIDEWALK AND GUARDRAIL CONNECTION (WITHOUT CONCRETE WEARING COURSE)

DES: DR: CHK: CHK:
SHEET NO. OF SHEETS

FIG. 5-397.138(C)
APPROVED:
BRIDGE NO.

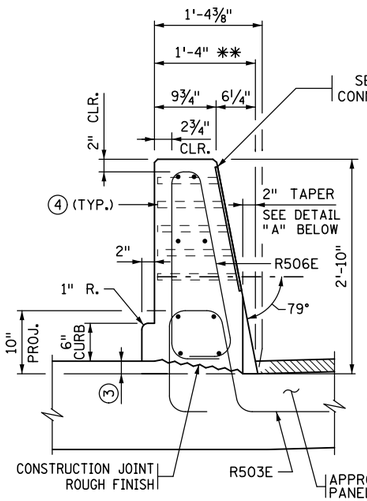

END VIEW

✱✱ DIMENSION SHOWN IS TO THE TOP OF THE WEARING COURSE AT GUTTERLINE.

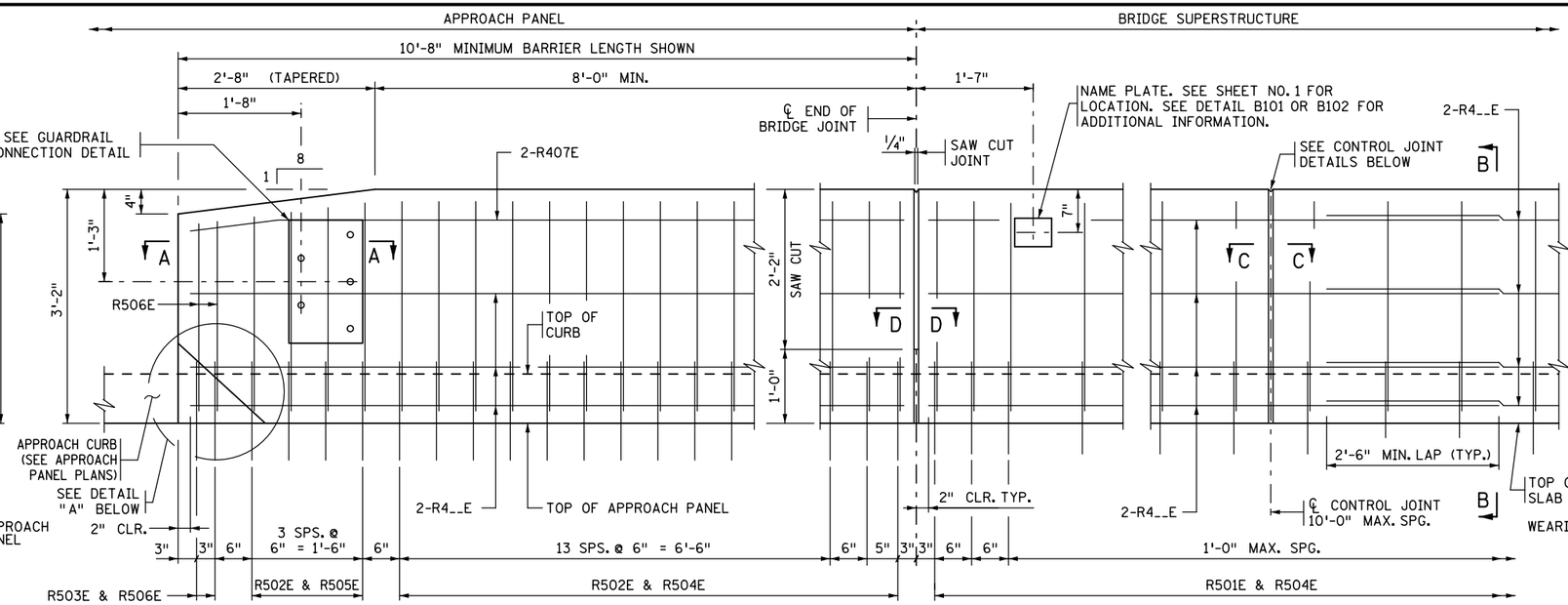

JOINT AT ABUTMENT

(INTEGRAL OR SEMI-INTEGRAL ABUTMENT)

CONTROL JOINT

INSIDE ELEVATION OF BARRIER

CONCRETE WEARING COURSE NOT SHOWN

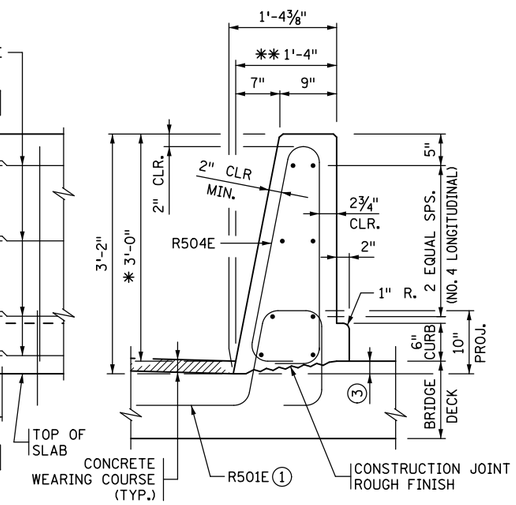

SECTION B-B

✱✱ DIMENSION SHOWN IS TO THE TOP OF THE WEARING COURSE AT GUTTERLINE.

DESIGNER NOTE
(REMOVE PRIOR TO PLOTTING FINAL PLAN):

MINIMUM BARRIER LENGTH ON APPROACH PANEL IS 10'-8" WITH MINIMUM OF 22 R502E AND R503E DOWELS WITH ACCOMPANYING APPROPRIATE BARRIER VERTICAL BARS, 12" MAX. SPACING.
VERIFY APPROACH BARRIER LENGTH, NEED FOR A GUARDRAIL CONNECTION, AND VERTICAL TAPER WITH ROADWAY DESIGNER.
REFER TO MEMO TO DESIGNERS (2016-01) FOR ADDITIONAL REQUIREMENTS REGARDING BARRIER PLACEMENT.

BARRIER MEETS NCHRP 350 TL-4 REQUIREMENTS ON BRIDGE DECK AND TL-3 ON APPROACH PANEL.

BILL OF REINFORCEMENT FOR BARRIER

BAR	NO.	LENGTH	SHAPE	LOCATION
R501E		5'-4"		BARRIER DOWEL
R502E		5'-6"		BARRIER DOWEL
R503E		5'-5"		BARRIER DOWEL
R504E		7'-5"		BARRIER VERTICAL
R505E	-- SER. OF 4	6'-11" TO 7'-3"		BARRIER VERTICAL
R506E		6'-9"		BARRIER VERTICAL
R407E		10'-3"		BARRIER LONGIT.
R4__E				BARRIER LONGIT.
R4__E				BARRIER LONGIT.
R4__E				BARRIER LONGIT.
R4__E				BARRIER LONGIT.
R4__E				BARRIER LONGIT.

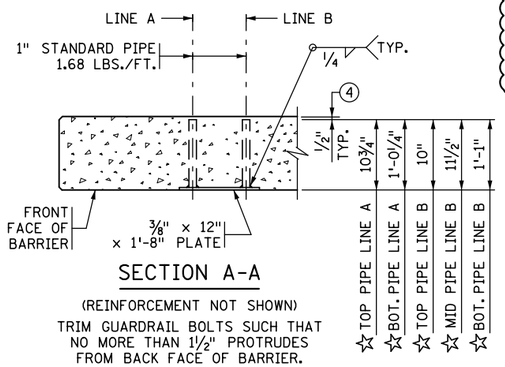

SECTION A-A

(REINFORCEMENT NOT SHOWN)

TRIM GUARDRAIL BOLTS SUCH THAT NO MORE THAN 1½" PROTRUDES FROM BACK FACE OF BARRIER.

☆ DIMENSIONS INCLUDE ⅜" PLATE

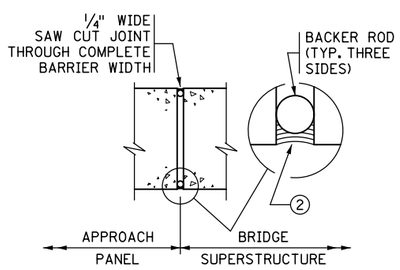

SECTION D-D

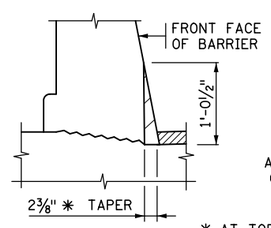

VIEW F-F

AT BARRIER END

✱ AT TOP OF STRUCTURAL SLAB

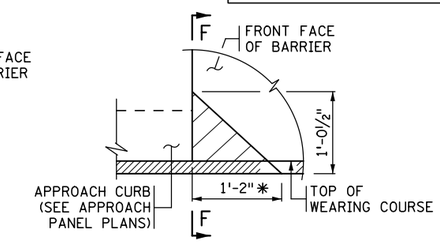

DETAIL "A"

ELEVATION VIEW (WEARING COURSE SHOWN)

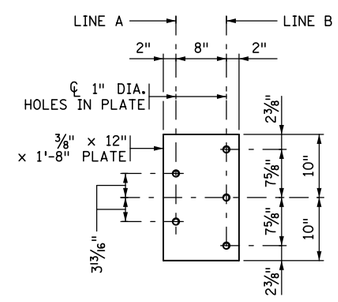

GUARDRAIL CONNECTION DETAIL

GALVANIZE AFTER FABRICATION PER SPEC. 3394
ESTIMATED WEIGHT = 34 LBS.

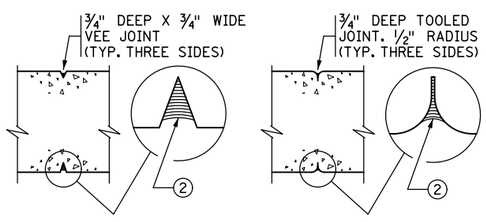

SECTION C-C

CONTRACTOR OPTION 1

SECTION C-C

CONTRACTOR OPTION 2

CONTROL JOINT DETAILS

WHEN USING SLIP FORM METHOD TO PLACE THE CONCRETE, CUT JOINT 3 INCHES DEEP USING MARGIN TROWEL OR SIMILAR MEANS IMMEDIATELY AFTER CONCRETE PLACEMENT (TYP. THREE SIDES).

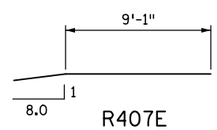

R407E

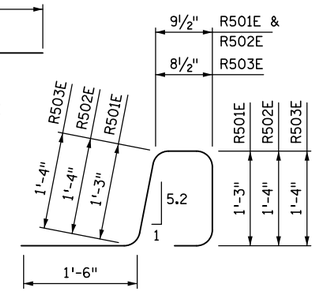

R501E, R502E, R503E

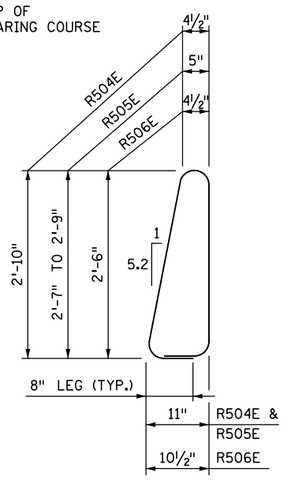

R504E, R505E, R506E

GENERAL NOTES

MEASURE PAYMENT LENGTH BETWEEN THE OUTSIDE ENDS OF THE BARRIER.

CONCRETE BARRIER = 500 LBS./FT. (0.123 CU. YDS./FT.)

FINISH ALL EDGES OF BARRIER WITH ½" CHAMFER, EXCEPT WHERE OTHERWISE NOTED.

SPACE CONTROL JOINTS AT 10 FT. MAXIMUM. REFER TO SUPERSTRUCTURE SHEET FOR SPECIFIC SPACING INFORMATION.

GUARDRAIL CONNECTION TO BE STRUCTURAL STEEL, SPEC. 3306.

GUARDRAIL CONNECTION AND NAME PLATE TO BE CONSIDERED INCIDENTAL TO BARRIER.

BARRIER QUANTITIES ARE LISTED IN SUMMARY OF QUANTITIES FOR SUPERSTRUCTURE.

1. PLACE BAR ON TOP OF BOTTOM REINFORCEMENT MAT IN DECK.
2. JOINT SEALANT PER MnDOT APPROVED/QUALIFIED PRODUCTS LIST - CRACK AND JOINT MATERIALS - SILICONE JOINT SEALERS.
3. DIMENSIONS TO BE DETERMINED BASED ON THE BRIDGE DECK SLOPE.
4. REMOVE CONCRETE FROM PIPE ENDS AFTER SLIPFORMING OR FORM REMOVAL.

REVISION:

APPROVED: AUGUST 24, 2016
Kevin Western
STATE BRIDGE ENGINEER

CERTIFIED BY _____ LICENSED PROFESSIONAL ENGINEER _____ DATE
NAME: LIC. NO.

TITLE: SINGLE SLOPE CONCRETE BARRIER 36" (TYPE S, TL-4)
INTEGRAL OR SEMI-INTEGRAL ABUTMENT WITH BRIDGE SLAB SIDEWALK AND GUARDRAIL CONNECTION (WITH 2" CONCRETE WEARING COURSE)

DES: DR: CHK: CHK:
SHEET NO. OF SHEETS

FIG. 5-397.138(D)
APPROVED:
BRIDGE NO.

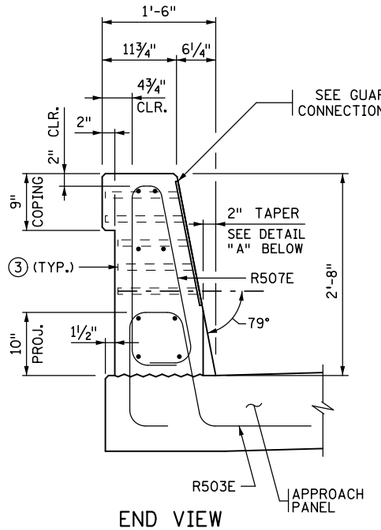

END VIEW

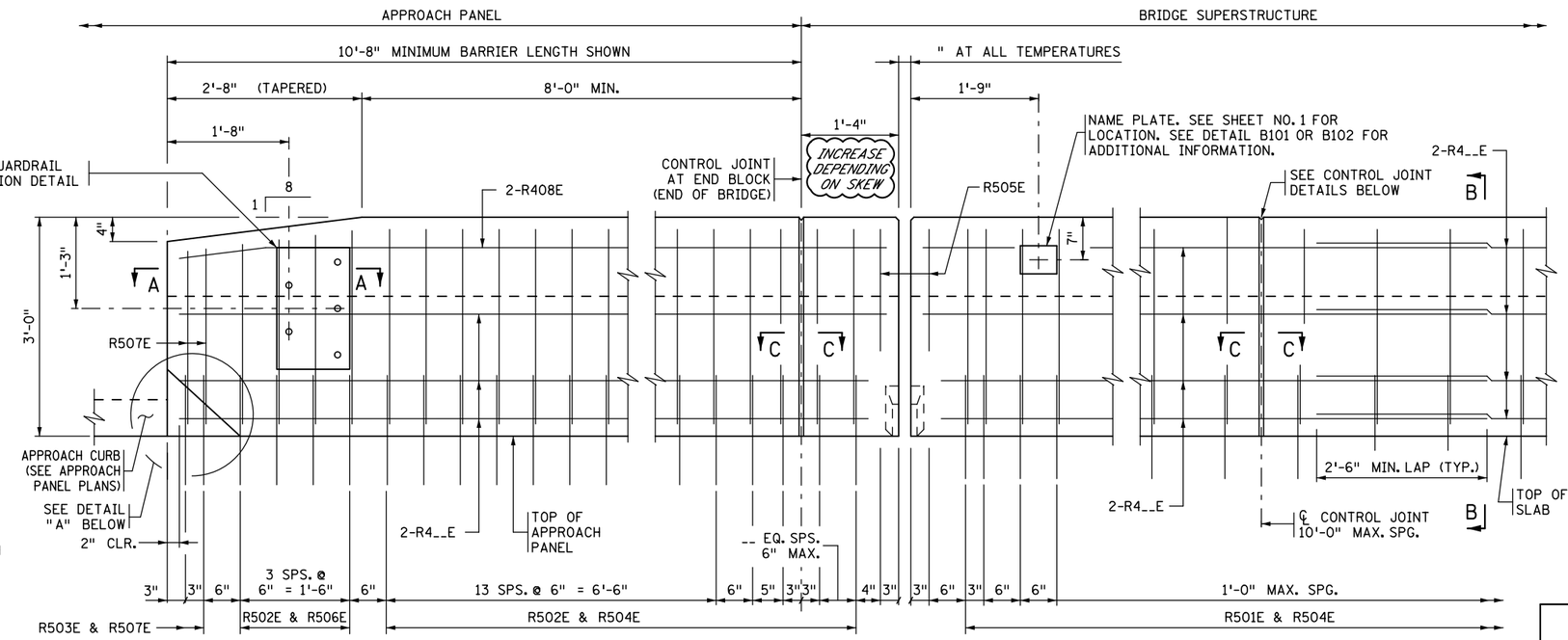

EXPANSION JOINT ④

EXPANSION DEVICE NOT SHOWN

CONTROL JOINT

INSIDE ELEVATION OF BARRIER

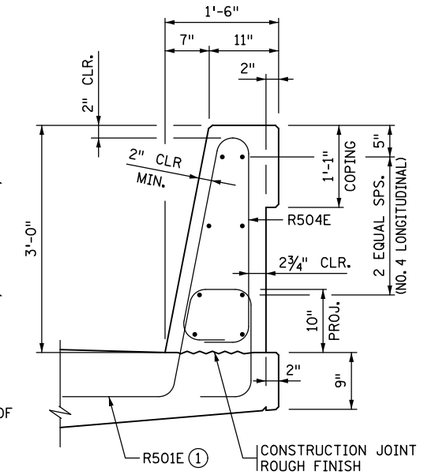

SECTION B-B

BILL OF REINFORCEMENT FOR BARRIER				
BAR	NO.	LENGTH	SHAPE	LOCATION
R501E		5'-7"		BARRIER DOWEL
R502E		5'-9"		BARRIER DOWEL
R503E		5'-8"		BARRIER DOWEL
R504E		7'-1"		BARRIER VERTICAL
R505E		5'-1"		BARRIER VERTICAL
R506E	-- SER. OF 4	6'-7" TO 6'-11"		BARRIER VERTICAL
R507E		6'-5"		BARRIER VERTICAL
R408E		11'-7"		BARRIER LONGIT.
R4__E				BARRIER LONGIT.
R4__E				BARRIER LONGIT.
R4__E				BARRIER LONGIT.
R4__E				BARRIER LONGIT.

BARRIER MEETS NCHRP 350 TL-4 REQUIREMENTS ON BRIDGE DECK AND TL-3 ON APPROACH PANEL.

DESIGNER NOTE
(REMOVE PRIOR TO PLOTTING FINAL PLAN):

MINIMUM BARRIER LENGTH ON APPROACH PANEL IS 10'-8" WITH MINIMUM OF 22 R502E AND R503E DOWELS WITH ACCOMPANYING APPROPRIATE BARRIER VERTICAL BARS, 12" MAX. SPACING.
VERIFY APPROACH BARRIER LENGTH, NEED FOR A GUARDRAIL CONNECTION, AND VERTICAL TAPER WITH ROADWAY DESIGNER.
REFER TO MEMO TO DESIGNERS (2016-01) FOR ADDITIONAL REQUIREMENTS REGARDING BARRIER PLACEMENT.

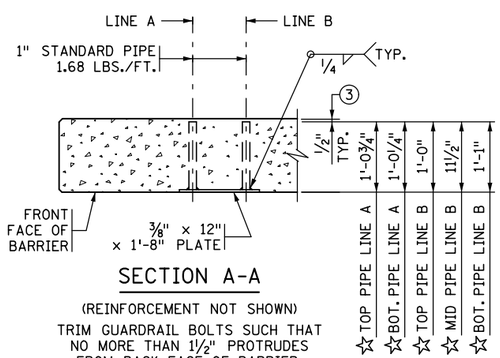

SECTION A-A

(REINFORCEMENT NOT SHOWN)

TRIM GUARDRAIL BOLTS SUCH THAT NO MORE THAN 1½" PROTRUDES FROM BACK FACE OF BARRIER.

☆ DIMENSIONS INCLUDE ⅜" PLATE

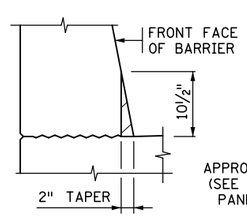

VIEW F-F

AT BARRIER END

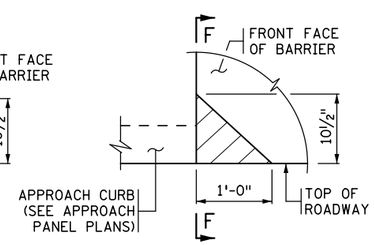

DETAIL "A"

ELEVATION VIEW

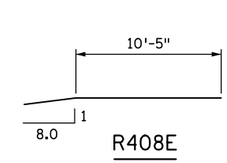

R408E

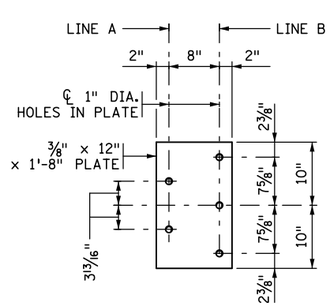

GUARDRAIL CONNECTION DETAIL

GALVANIZE AFTER FABRICATION PER SPEC. 3394
ESTIMATED WEIGHT = 34 LBS.

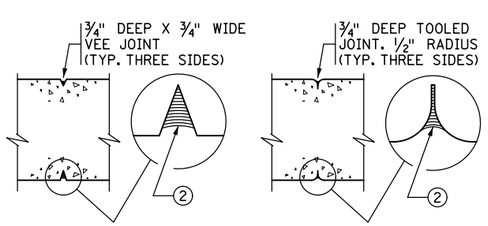

SECTION C-C

CONTRACTOR OPTION 1

SECTION C-C

CONTRACTOR OPTION 2

CONTROL JOINT DETAILS

WHEN USING SLIP FORM METHOD TO PLACE THE CONCRETE, CUT JOINT 3 INCHES DEEP USING MARGIN TROWEL OR SIMILAR MEANS IMMEDIATELY AFTER CONCRETE PLACEMENT (TYP. THREE SIDES).

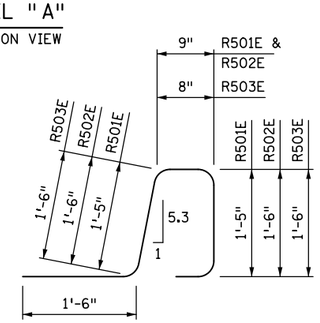

R501E, R502E, R503E

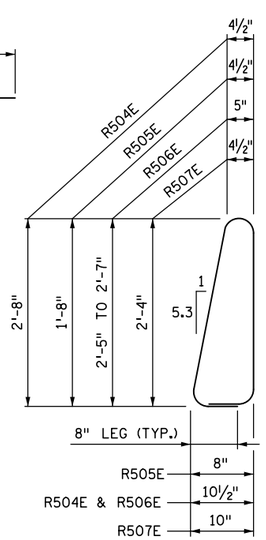

R504E, R505E, R506E, R507E

GENERAL NOTES

MEASURE PAYMENT LENGTH BETWEEN THE OUTSIDE ENDS OF THE BARRIER.

CONCRETE BARRIER = 496 LBS./FT. (0.123 CU. YDS./FT.)

FINISH ALL EDGES OF BARRIER WITH ½" CHAMFER, EXCEPT WHERE OTHERWISE NOTED.

SPACE CONTROL JOINTS AT 10 FT. MAXIMUM. REFER TO SUPERSTRUCTURE SHEET FOR SPECIFIC SPACING INFORMATION.

GUARDRAIL CONNECTION TO BE STRUCTURAL STEEL, SPEC. 3306.

GUARDRAIL CONNECTION AND NAME PLATE TO BE CONSIDERED INCIDENTAL TO BARRIER.

BARRIER QUANTITIES ARE LISTED IN SUMMARY OF QUANTITIES FOR SUPERSTRUCTURE.

① PLACE BAR ON TOP OF BOTTOM REINFORCEMENT MAT IN DECK.

② JOINT SEALANT PER MnDOT APPROVED/QUALIFIED PRODUCTS LIST - CRACK AND JOINT MATERIALS - SILICONE JOINT SEALERS.

③ REMOVE CONCRETE FROM PIPE ENDS AFTER SLIPFORMING OR FORM REMOVAL.

④ REFER TO "WATERPROOF EXPANSION DEVICE" STANDARD PLANS FOR COVER PLATE DETAILS.

REVISION:

APPROVED: AUGUST 24, 2016
Kevin Western
STATE BRIDGE ENGINEER

CERTIFIED BY
LICENSED PROFESSIONAL ENGINEER DATE
NAME: LIC. NO.

TITLE: SINGLE SLOPE CONCRETE BARRIER 36" (TYPE S, TL-4)
PARAPET ABUTMENT WITH GUARDRAIL CONNECTION (WITHOUT CONCRETE WEARING COURSE)

DES: DR:
CHK: CHK:
SHEET NO. OF SHEETS

FIG. 5-397.139(A)

APPROVED:

BRIDGE NO.

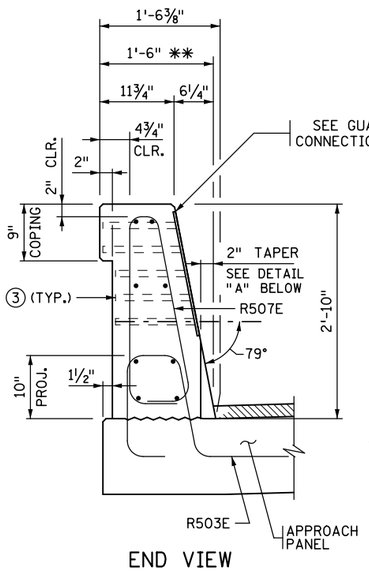

END VIEW

** DIMENSION SHOWN IS TO THE TOP OF THE WEARING COURSE AT GUTTERLINE.

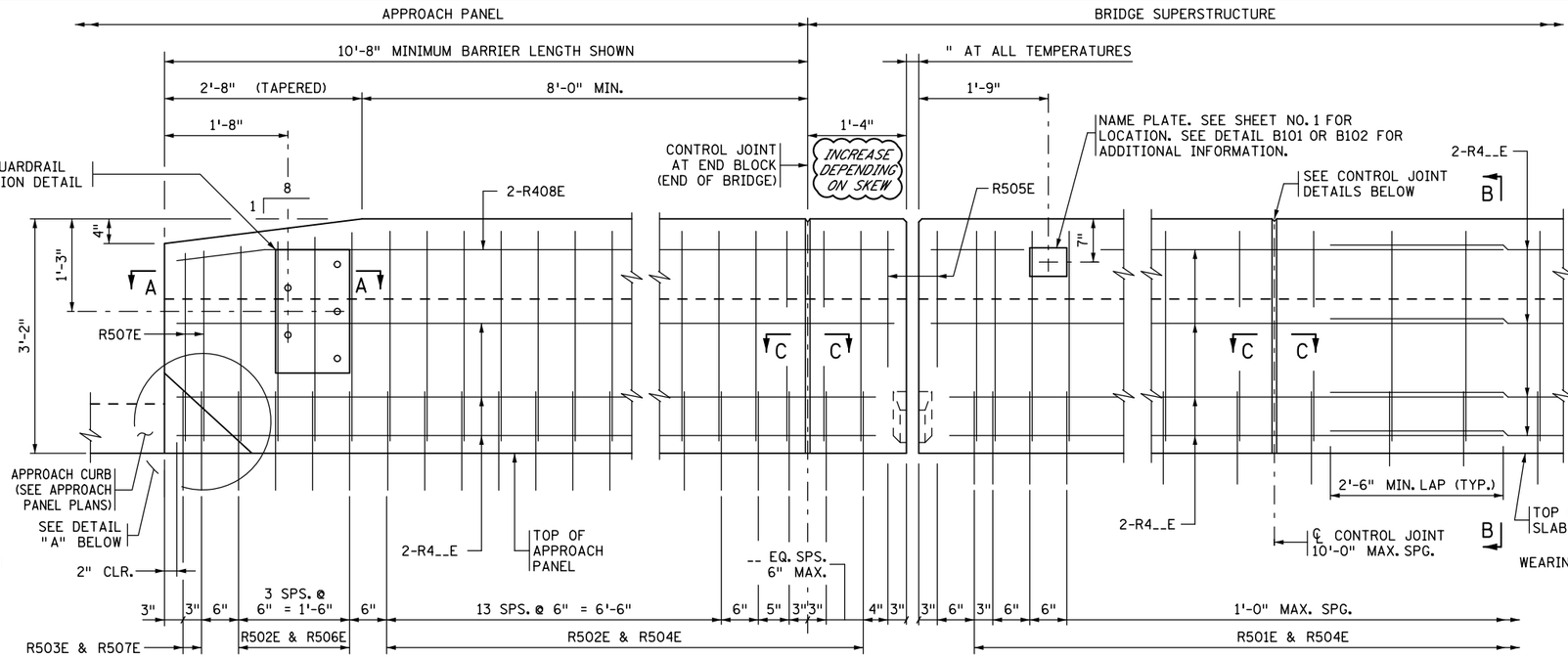

EXPANSION JOINT ④

EXPANSION DEVICE NOT SHOWN

CONTROL JOINT

INSIDE ELEVATION OF BARRIER

CONCRETE WEARING COURSE NOT SHOWN

BARRIER MEETS NCHRP 350 TL-4 REQUIREMENTS ON BRIDGE DECK AND TL-3 ON APPROACH PANEL.

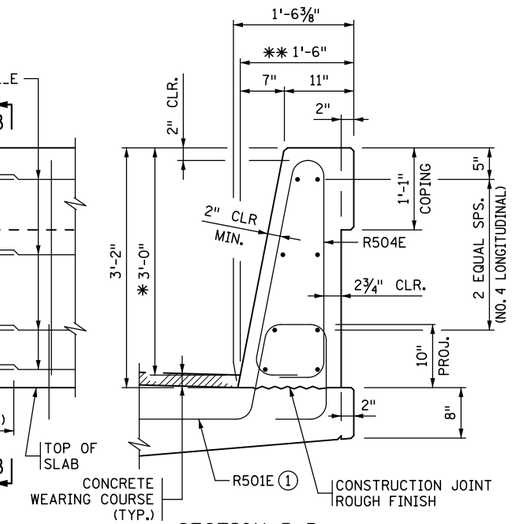

SECTION B-B

** DIMENSION SHOWN IS TO THE TOP OF THE WEARING COURSE AT GUTTERLINE.

BILL OF REINFORCEMENT FOR BARRIER

BAR	NO.	LENGTH	SHAPE	LOCATION
R501E		5'-4"		BARRIER DOWEL
R502E		5'-6"		BARRIER DOWEL
R503E		5'-5"		BARRIER DOWEL
R504E		7'-5"		BARRIER VERTICAL
R505E		5'-5"		BARRIER VERTICAL
R506E	-- SER. OF 4	6'-11" TO 7'-3"		BARRIER VERTICAL
R507E		6'-9"		BARRIER VERTICAL
R408E		11'-7"		BARRIER LONGIT.
R4__E				BARRIER LONGIT.
R4__E				BARRIER LONGIT.
R4__E				BARRIER LONGIT.
R4__E				BARRIER LONGIT.
R4__E				BARRIER LONGIT.

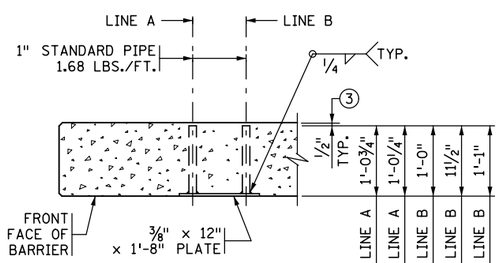

SECTION A-A

(REINFORCEMENT NOT SHOWN)

TRIM GUARDRAIL BOLTS SUCH THAT NO MORE THAN 1½" PROTRUDES FROM BACK FACE OF BARRIER.

☆ DIMENSIONS INCLUDE ⅜" PLATE

DESIGNER NOTE
(REMOVE PRIOR TO PLOTTING FINAL PLAN):

MINIMUM BARRIER LENGTH ON APPROACH PANEL IS 10'-8" WITH MINIMUM OF 22 R502E AND R503E DOWELS WITH ACCOMPANYING APPROPRIATE BARRIER VERTICAL BARS, 12" MAX. SPACING.
VERIFY APPROACH BARRIER LENGTH, NEED FOR A GUARDRAIL CONNECTION, AND VERTICAL TAPER WITH ROADWAY DESIGNER.
REFER TO MEMO TO DESIGNERS (2016-01) FOR ADDITIONAL REQUIREMENTS REGARDING BARRIER PLACEMENT AND LINK WITH ADJACENT RETAINING WALLS.

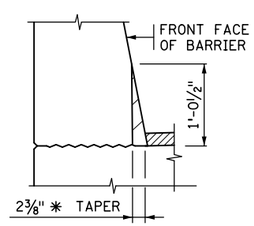

VIEW F-F

AT BARRIER END

* AT TOP OF STRUCTURAL SLAB

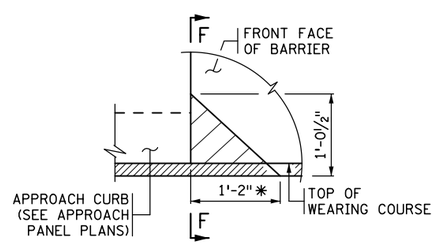

DETAIL "A"

ELEVATION VIEW (WEARING COURSE SHOWN)

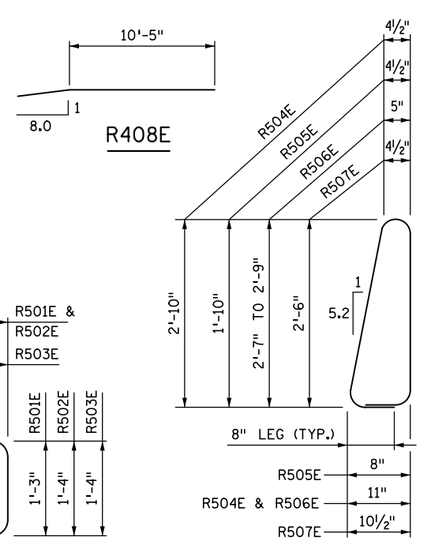

R504E, R505E, R506E, R507E

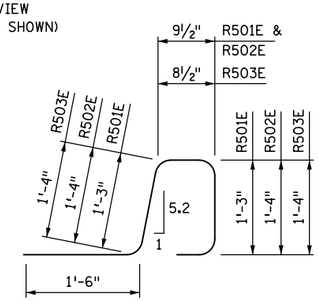

R501E, R502E, R503E

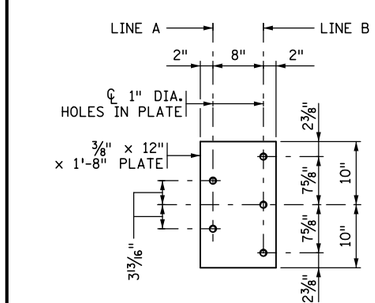

GUARDRAIL CONNECTION DETAIL

GALVANIZE AFTER FABRICATION PER SPEC. 3394
ESTIMATED WEIGHT = 34 LBS.

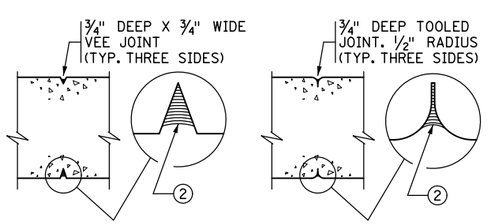

SECTION C-C

CONTRACTOR OPTION 1

SECTION C-C

CONTRACTOR OPTION 2

CONTROL JOINT DETAILS

WHEN USING SLIP FORM METHOD TO PLACE THE CONCRETE, CUT JOINT 3 INCHES DEEP USING MARGIN TROWEL OR SIMILAR MEANS IMMEDIATELY AFTER CONCRETE PLACEMENT (TYP. THREE SIDES).

GENERAL NOTES

MEASURE PAYMENT LENGTH BETWEEN THE OUTSIDE ENDS OF THE BARRIER.

CONCRETE BARRIER = 530 LBS./FT. (0.131 CU. YDS./FT.)

FINISH ALL EDGES OF BARRIER WITH ½" CHAMFER, EXCEPT WHERE OTHERWISE NOTED.

SPACE CONTROL JOINTS AT 10 FT. MAXIMUM. REFER TO SUPERSTRUCTURE SHEET FOR SPECIFIC SPACING INFORMATION.

GUARDRAIL CONNECTION TO BE STRUCTURAL STEEL, SPEC. 3306.

GUARDRAIL CONNECTION AND NAME PLATE TO BE CONSIDERED INCIDENTAL TO BARRIER.

BARRIER QUANTITIES ARE LISTED IN SUMMARY OF QUANTITIES FOR SUPERSTRUCTURE.

① PLACE BAR ON TOP OF BOTTOM REINFORCEMENT MAT IN DECK.

② JOINT SEALANT PER MnDOT APPROVED/QUALIFIED PRODUCTS LIST - CRACK AND JOINT MATERIALS - SILICONE JOINT SEALERS.

③ REMOVE CONCRETE FROM PIPE ENDS AFTER SLIPFORMING OR FORM REMOVAL.

④ REFER TO "WATERPROOF EXPANSION DEVICE" STANDARD PLANS FOR COVER PLATE DETAILS.

REVISION:

APPROVED: AUGUST 24, 2016
Kevin Western
STATE BRIDGE ENGINEER

CERTIFIED BY
LICENSED PROFESSIONAL ENGINEER DATE
NAME: LIC. NO.

TITLE: SINGLE SLOPE CONCRETE BARRIER 36" (TYPE S, TL-4)
PARAPET ABUTMENT WITH GUARDRAIL CONNECTION (WITH 2" CONCRETE WEARING COURSE)

DES: DR:
CHK: CHK:
SHEET NO. OF SHEETS

FIG. 5-397.139(B)

APPROVED:

BRIDGE NO.

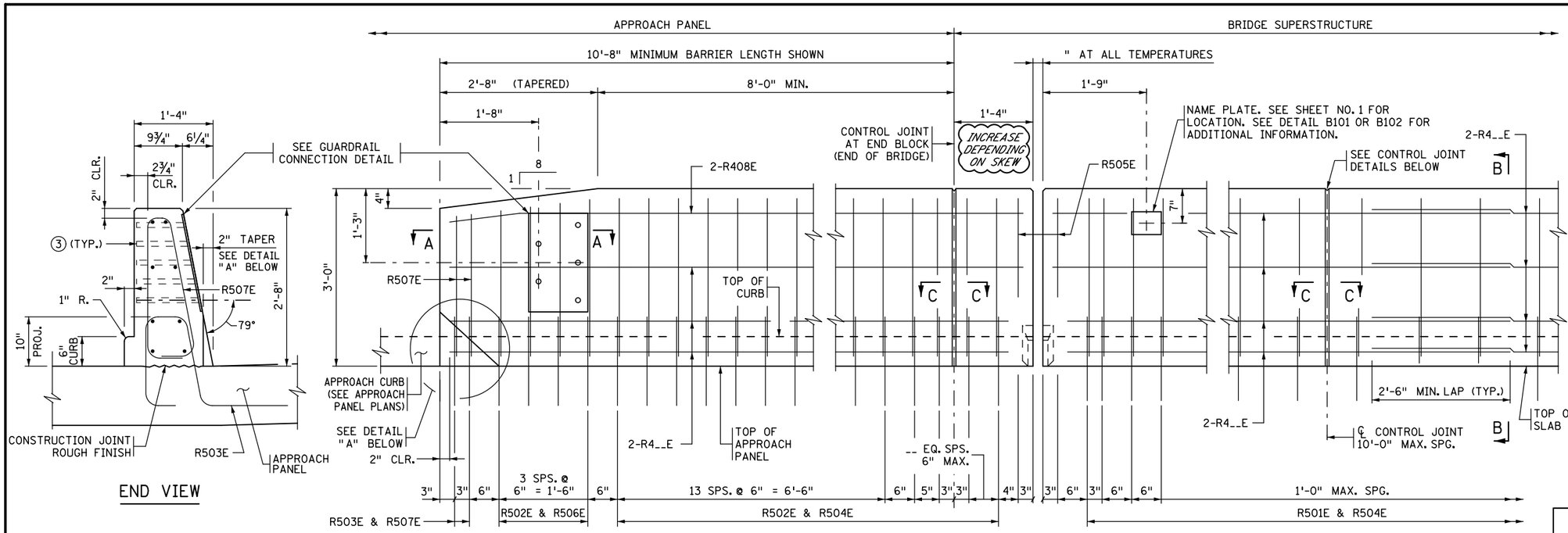

EXPANSION JOINT ④

EXPANSION DEVICE NOT SHOWN

CONTROL JOINT

INSIDE ELEVATION OF BARRIER

END VIEW

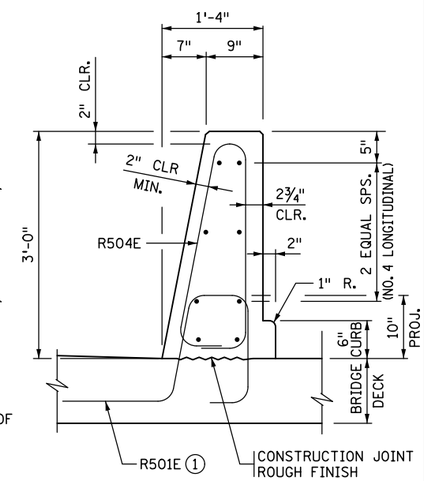

SECTION B-B

BILL OF REINFORCEMENT FOR BARRIER				
BAR	NO.	LENGTH	SHAPE	LOCATION
R501E		5'-7"		BARRIER DOWEL
R502E		5'-9"		BARRIER DOWEL
R503E		5'-8"		BARRIER DOWEL
R504E		7'-1"		BARRIER VERTICAL
R505E		5'-1"		BARRIER VERTICAL
R506E	-- SER. OF 4	6'-7" TO 6'-11"		BARRIER VERTICAL
R507E		6'-5"		BARRIER VERTICAL
R408E		11'-7"		BARRIER LONGIT.
R4__E				BARRIER LONGIT.
R4__E				BARRIER LONGIT.
R4__E				BARRIER LONGIT.
R4__E				BARRIER LONGIT.
R4__E				BARRIER LONGIT.

BARRIER MEETS NCHRP 350 TL-4 REQUIREMENTS ON BRIDGE DECK AND TL-3 ON APPROACH PANEL.

DESIGNER NOTE
(REMOVE PRIOR TO PLOTTING FINAL PLAN):

MINIMUM BARRIER LENGTH ON APPROACH PANEL IS 10'-8" WITH MINIMUM OF 22 R502E AND R503E DOWELS WITH ACCOMPANYING APPROPRIATE BARRIER VERTICAL BARS, 12" MAX. SPACING.
VERIFY APPROACH BARRIER LENGTH, NEED FOR A GUARDRAIL CONNECTION, AND VERTICAL TAPER WITH ROADWAY DESIGNER.
REFER TO MEMO TO DESIGNERS (2016-01) FOR ADDITIONAL REQUIREMENTS REGARDING BARRIER PLACEMENT.

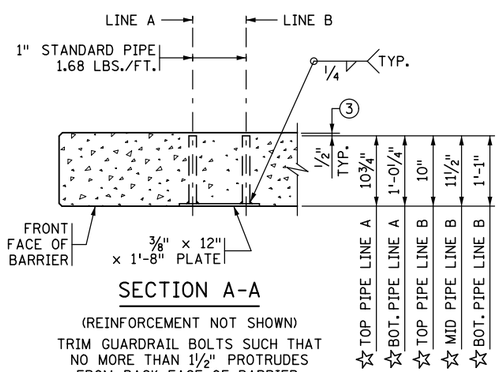

SECTION A-A

(REINFORCEMENT NOT SHOWN)

TRIM GUARDRAIL BOLTS SUCH THAT NO MORE THAN 1½" PROTRUDES FROM BACK FACE OF BARRIER.

☆ DIMENSIONS INCLUDE ⅜" PLATE

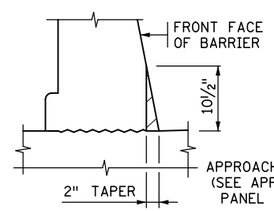

VIEW F-F

AT BARRIER END

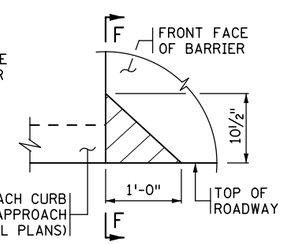

DETAIL "A"

ELEVATION VIEW

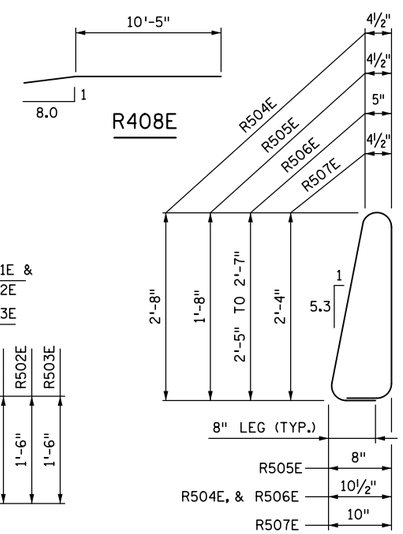

R504E, R505E, R506E, R507E

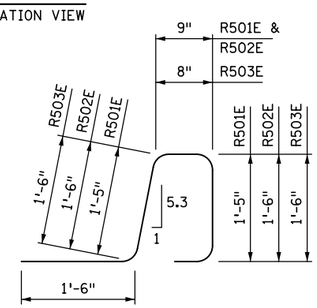

R501E, R502E, R503E

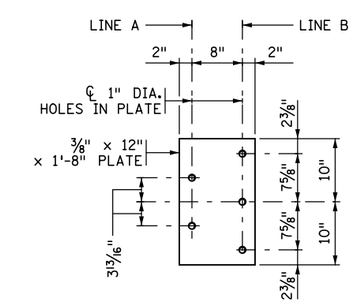

GUARDRAIL CONNECTION DETAIL

GALVANIZE AFTER FABRICATION PER SPEC. 3394
ESTIMATED WEIGHT = 34 LBS.

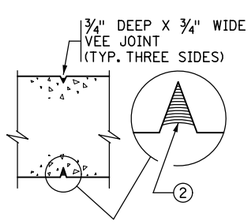

SECTION C-C

CONTRACTOR OPTION 1

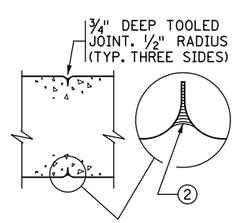

SECTION C-C

CONTRACTOR OPTION 2

CONTROL JOINT DETAILS

WHEN USING SLIP FORM METHOD TO PLACE THE CONCRETE, CUT JOINT 3 INCHES DEEP USING MARGIN TROWEL OR SIMILAR MEANS IMMEDIATELY AFTER CONCRETE PLACEMENT (TYP. THREE SIDES).

GENERAL NOTES

MEASURE PAYMENT LENGTH BETWEEN THE OUTSIDE ENDS OF THE BARRIER.

CONCRETE BARRIER = 481 LBS./FT. (0.119 CU. YDS./FT.)

FINISH ALL EDGES OF BARRIER WITH ½" CHAMFER, EXCEPT WHERE OTHERWISE NOTED.

SPACE CONTROL JOINTS AT 10 FT. MAXIMUM. REFER TO SUPERSTRUCTURE SHEET FOR SPECIFIC SPACING INFORMATION.

GUARDRAIL CONNECTION TO BE STRUCTURAL STEEL, SPEC. 3306.

GUARDRAIL CONNECTION AND NAME PLATE TO BE CONSIDERED INCIDENTAL TO BARRIER.

BARRIER QUANTITIES ARE LISTED IN SUMMARY OF QUANTITIES FOR SUPERSTRUCTURE.

① PLACE BAR ON TOP OF BOTTOM REINFORCEMENT MAT IN DECK.

② JOINT SEALANT PER MnDOT APPROVED/QUALIFIED PRODUCTS LIST - CRACK AND JOINT MATERIALS - SILICONE JOINT SEALERS.

③ REMOVE CONCRETE FROM PIPE ENDS AFTER SLIPFORMING OR FORM REMOVAL.

④ REFER TO "WATERPROOF EXPANSION DEVICE" STANDARD PLANS FOR COVER PLATE DETAILS.

REVISION:

APPROVED: AUGUST 24, 2016
Kevin Western
STATE BRIDGE ENGINEER

CERTIFIED BY _____ LICENSED PROFESSIONAL ENGINEER _____ DATE
NAME: LIC. NO.

TITLE: SINGLE SLOPE CONCRETE BARRIER 36" (TYPE S, TL-4)
PARAPET ABUTMENT WITH BRIDGE SLAB SIDEWALK AND GUARDRAIL CONNECTION (WITHOUT CONCRETE WEARING COURSE)

DES: DR: CHK: CHK:

SHEET NO. OF SHEETS

APPROVED:

FIG. 5-397.139(C)

BRIDGE NO.

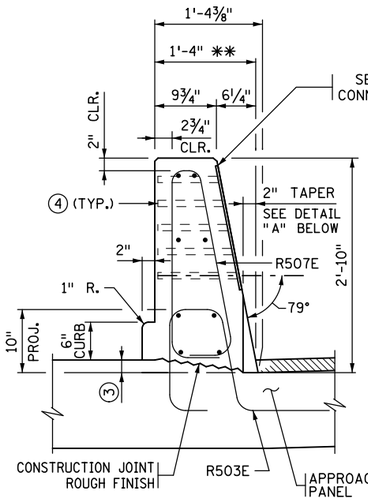

END VIEW

** DIMENSION SHOWN IS TO THE TOP OF THE WEARING COURSE AT GUTTERLINE.

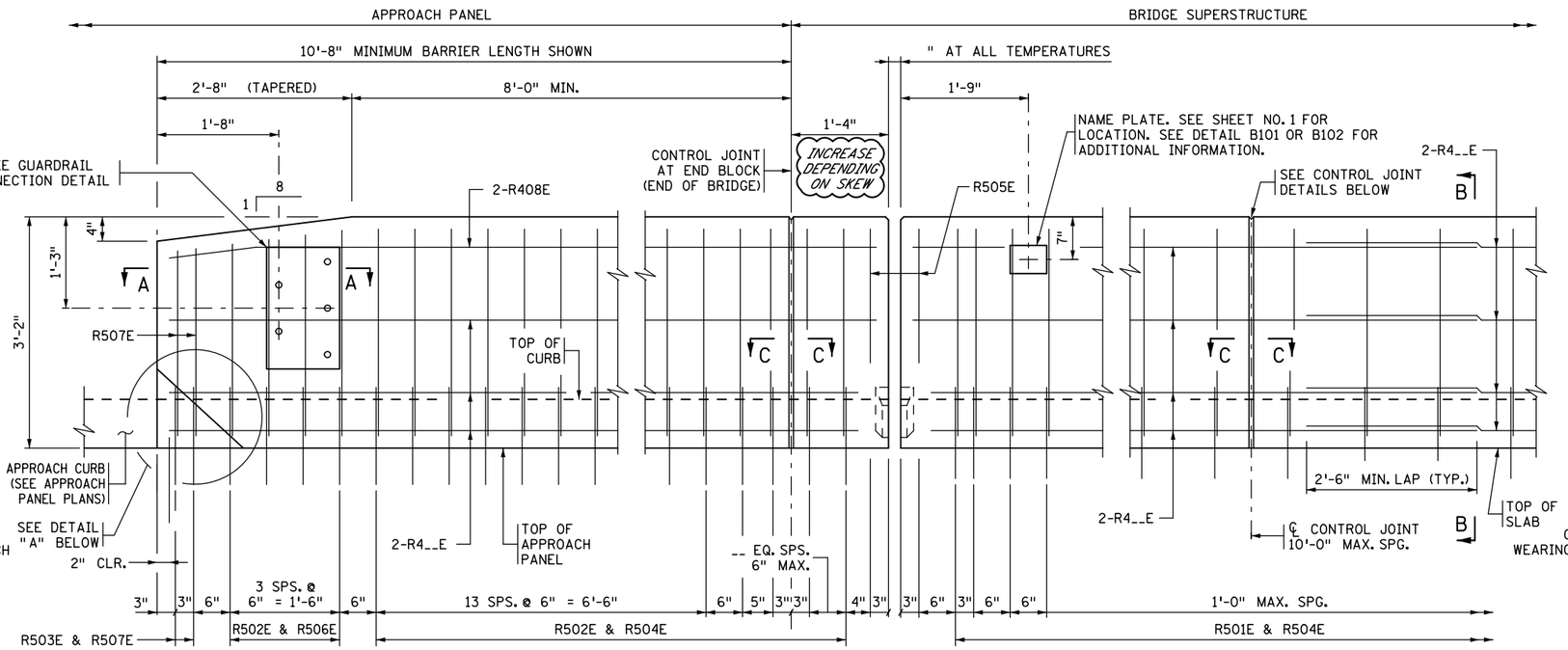

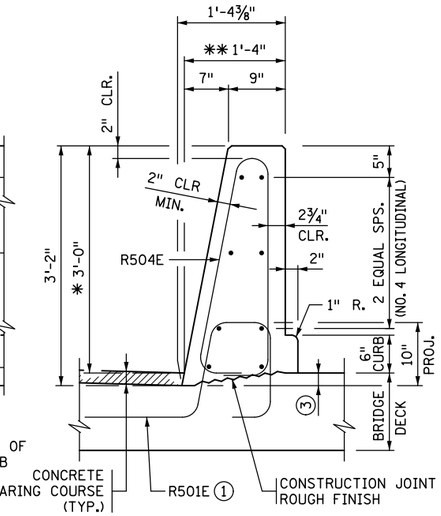

SECTION B-B

** DIMENSION SHOWN IS TO THE TOP OF THE WEARING COURSE AT GUTTERLINE.

DESIGNER NOTE
(REMOVE PRIOR TO PLOTTING FINAL PLAN):

MINIMUM BARRIER LENGTH ON APPROACH PANEL IS 10'-8" WITH MINIMUM OF 22 R502E AND R503E DOWELS WITH ACCOMPANYING APPROPRIATE BARRIER VERTICAL BARS, 12" MAX. SPACING.
VERIFY APPROACH BARRIER LENGTH, NEED FOR A GUARDRAIL CONNECTION, AND VERTICAL TAPER WITH ROADWAY DESIGNER.
REFER TO MEMO TO DESIGNERS (2016-01) FOR ADDITIONAL REQUIREMENTS REGARDING BARRIER PLACEMENT AND LINK WITH ADJACENT RETAINING WALLS.

EXPANSION JOINT ⑤

EXPANSION DEVICE NOT SHOWN

CONTROL JOINT

INSIDE ELEVATION OF BARRIER

CONCRETE WEARING COURSE NOT SHOWN

BARRIER MEETS NCHRP 350 TL-4 REQUIREMENTS ON BRIDGE DECK AND TL-3 ON APPROACH PANEL.

BILL OF REINFORCEMENT FOR BARRIER

BAR	NO.	LENGTH	SHAPE	LOCATION
R501E		5'-4"		BARRIER DOWEL
R502E		5'-6"		BARRIER DOWEL
R503E		5'-5"		BARRIER DOWEL
R504E		7'-5"		BARRIER VERTICAL
R505E		5'-5"		BARRIER VERTICAL
R506E	-- SER. OF 4	6'-11" TO 7'-3"		BARRIER VERTICAL
R507E		6'-9"		BARRIER VERTICAL
R408E		11'-7"		BARRIER LONGIT.
R4__E				BARRIER LONGIT.
R4__E				BARRIER LONGIT.
R4__E				BARRIER LONGIT.
R4__E				BARRIER LONGIT.
R4__E				BARRIER LONGIT.

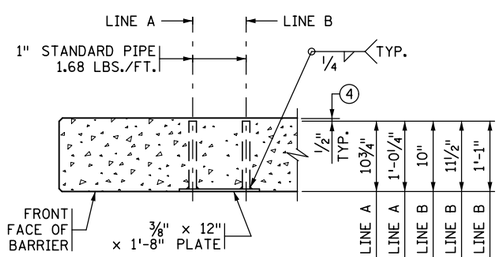

SECTION A-A

(REINFORCEMENT NOT SHOWN)

TRIM GUARDRAIL BOLTS SUCH THAT NO MORE THAN 1½" PROTRUDES FROM BACK FACE OF BARRIER.

☆ DIMENSIONS INCLUDE ⅜" PLATE

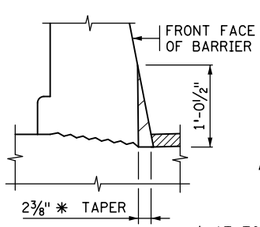

VIEW F-F

AT BARRIER END

* AT TOP OF STRUCTURAL SLAB

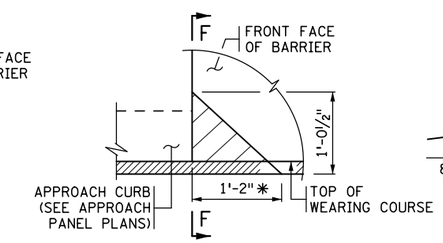

DETAIL "A"

ELEVATION VIEW (WEARING COURSE SHOWN)

R408E

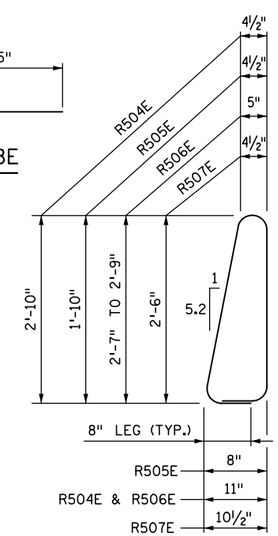

R504E, R505E, R506E, R507E

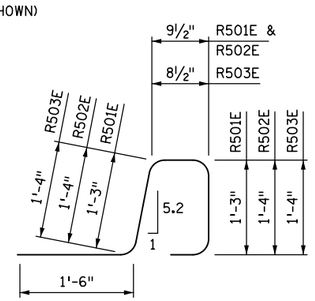

R501E, R502E, R503E

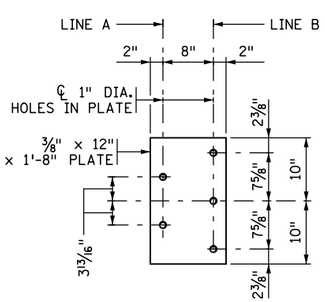

GUARDRAIL CONNECTION DETAIL

GALVANIZE AFTER FABRICATION PER SPEC. 3394
ESTIMATED WEIGHT = 34 LBS.

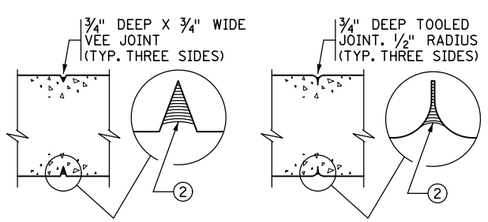

SECTION C-C

CONTRACTOR OPTION 1

SECTION C-C

CONTRACTOR OPTION 2

CONTROL JOINT DETAILS

WHEN USING SLIP FORM METHOD TO PLACE THE CONCRETE, CUT JOINT 3 INCHES DEEP USING MARGIN TROWEL OR SIMILAR MEANS IMMEDIATELY AFTER CONCRETE PLACEMENT (TYP. THREE SIDES).

GENERAL NOTES

MEASURE PAYMENT LENGTH BETWEEN THE OUTSIDE ENDS OF THE BARRIER.

CONCRETE BARRIER = 500 LBS./FT. (0.123 CU. YDS./FT.)

FINISH ALL EDGES OF BARRIER WITH ½" CHAMFER, EXCEPT WHERE OTHERWISE NOTED.

SPACE CONTROL JOINTS AT 10 FT. MAXIMUM. REFER TO SUPERSTRUCTURE SHEET FOR SPECIFIC SPACING INFORMATION.

GUARDRAIL CONNECTION TO BE STRUCTURAL STEEL, SPEC. 3306.

GUARDRAIL CONNECTION AND NAME PLATE TO BE CONSIDERED INCIDENTAL TO BARRIER.

BARRIER QUANTITIES ARE LISTED IN SUMMARY OF QUANTITIES FOR SUPERSTRUCTURE.

① PLACE BAR ON TOP OF BOTTOM REINFORCEMENT MAT IN DECK.

② JOINT SEALANT PER MnDOT APPROVED/QUALIFIED PRODUCTS LIST - CRACK AND JOINT MATERIALS - SILICONE JOINT SEALERS.

③ DIMENSIONS TO BE DETERMINED BASED ON THE BRIDGE DECK SLOPE.

④ REMOVE CONCRETE FROM PIPE ENDS AFTER SLIPFORMING OR FORM REMOVAL.

⑤ REFER TO "WATERPROOF EXPANSION DEVICE" STANDARD PLANS FOR COVER PLATE DETAILS.

FIG. 5-397.139(D)

REVISION:

APPROVED: AUGUST 24, 2016
Kevin Western
STATE BRIDGE ENGINEER

CERTIFIED BY _____ LICENSED PROFESSIONAL ENGINEER _____ DATE
NAME: LIC. NO.

TITLE: SINGLE SLOPE CONCRETE BARRIER 36" (TYPE S, TL-4)
PARAPET ABUTMENT WITH BRIDGE SLAB SIDEWALK AND GUARDRAIL CONNECTION (WITH 2" CONCRETE WEARING COURSE)

DES: DR: CHK: CHK:
SHEET NO. OF SHEETS

APPROVED:

BRIDGE NO.

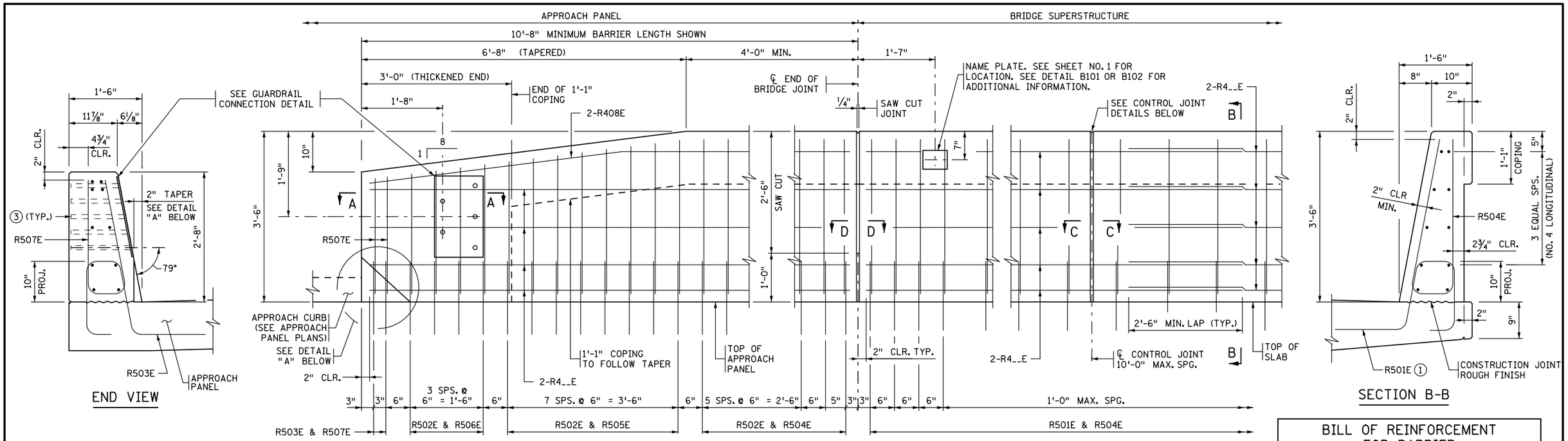

END VIEW

JOINT AT ABUTMENT

(INTEGRAL OR SEMI-INTEGRAL ABUTMENT)

CONTROL JOINT

SECTION B-B

INSIDE ELEVATION OF BARRIER

BARRIER MEETS NCHRP 350 TL-4 REQUIREMENTS ON BRIDGE DECK AND TL-3 ON APPROACH PANEL.

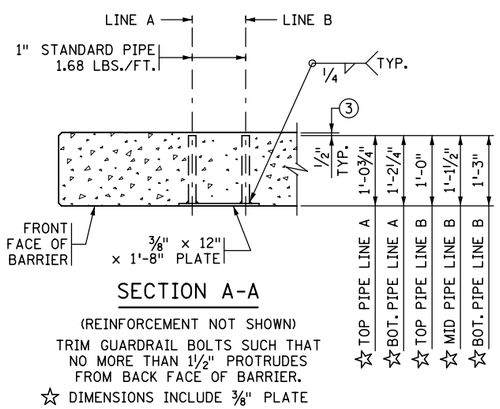

SECTION A-A

(REINFORCEMENT NOT SHOWN)

TRIM GUARDRAIL BOLTS SUCH THAT NO MORE THAN 1 1/2" PROTRUDES FROM BACK FACE OF BARRIER.

☆ DIMENSIONS INCLUDE 3/8" PLATE

DESIGNER NOTE
(REMOVE PRIOR TO PLOTTING FINAL PLAN):

MINIMUM BARRIER LENGTH ON APPROACH PANEL IS 10'-8" WITH MINIMUM OF 22 R502E AND R503E DOWELS WITH ACCOMPANYING APPROPRIATE BARRIER VERTICAL BARS, 12" MAX. SPACING.
VERIFY APPROACH BARRIER LENGTH, NEED FOR A GUARDRAIL CONNECTION, AND VERTICAL TAPER WITH ROADWAY DESIGNER.
REFER TO MEMO TO DESIGNERS (2016-01) FOR ADDITIONAL REQUIREMENTS REGARDING BARRIER PLACEMENT.

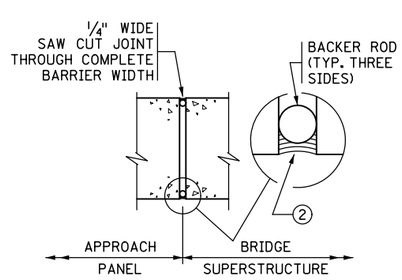

SECTION D-D

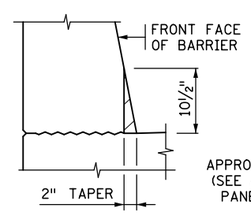

VIEW F-F

AT BARRIER END

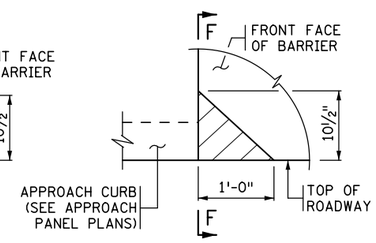

DETAIL "A"

ELEVATION VIEW

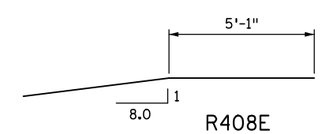

R408E

BILL OF REINFORCEMENT FOR BARRIER

BAR	NO.	LENGTH	SHAPE	LOCATION
R501E		5'-7"		BARRIER DOWEL
R502E		5'-9"		BARRIER DOWEL
R503E		5'-8"		BARRIER DOWEL
R504E		7'-3"		BARRIER VERTICAL
R505E	-- SER. OF 4	6'-3" TO 7'-1"		BARRIER VERTICAL
R506E	-- SER. OF 4	5'-9" TO 6'-1"		BARRIER VERTICAL
R507E		5'-6"		BARRIER VERTICAL
R408E		10'-3"		BARRIER LONGIT.
R4__E				BARRIER LONGIT.
R4__E				BARRIER LONGIT.
R4__E				BARRIER LONGIT.
R4__E				BARRIER LONGIT.
R4__E				BARRIER LONGIT.
R4__E				BARRIER LONGIT.

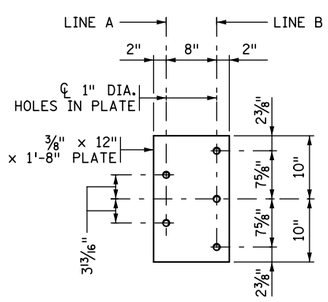

GUARDRAIL CONNECTION DETAIL

GALVANIZE AFTER FABRICATION PER SPEC. 3394
ESTIMATED WEIGHT = 35 LBS.

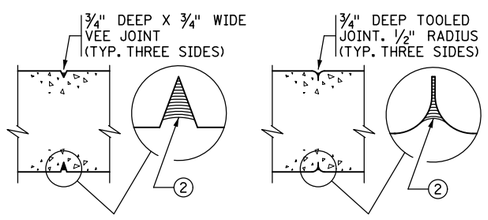

SECTION C-C

CONTRACTOR OPTION 1

SECTION C-C

CONTRACTOR OPTION 2

CONTROL JOINT DETAILS

WHEN USING SLIP FORM METHOD TO PLACE THE CONCRETE, CUT JOINT 3 INCHES DEEP USING MARGIN TROWEL OR SIMILAR MEANS IMMEDIATELY AFTER CONCRETE PLACEMENT (TYP. THREE SIDES).

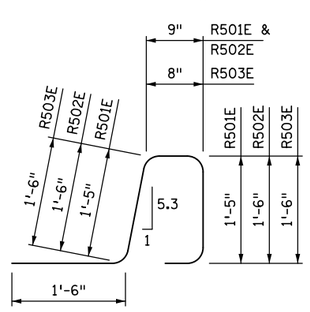

R501E, R502E, R503E

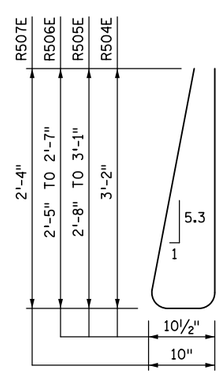

R504E, R505E, R506E, R507E

GENERAL NOTES

MEASURE PAYMENT LENGTH BETWEEN THE OUTSIDE ENDS OF THE BARRIER.

CONCRETE BARRIER = 552 LBS./FT. (0.136 CU. YDS./FT.)

FINISH ALL EDGES OF BARRIER WITH 1/2" CHAMFER, EXCEPT WHERE OTHERWISE NOTED.

SPACE CONTROL JOINTS AT 10 FT. MAXIMUM. REFER TO SUPERSTRUCTURE SHEET FOR SPECIFIC SPACING INFORMATION.

GUARDRAIL CONNECTION TO BE STRUCTURAL STEEL, SPEC. 3306.

GUARDRAIL CONNECTION AND NAME PLATE TO BE CONSIDERED INCIDENTAL TO BARRIER.

BARRIER QUANTITIES ARE LISTED IN SUMMARY OF QUANTITIES FOR SUPERSTRUCTURE.

① PLACE BAR ON TOP OF BOTTOM REINFORCEMENT MAT IN DECK.

② JOINT SEALANT PER MnDOT APPROVED/QUALIFIED PRODUCTS LIST - CRACK AND JOINT MATERIALS - SILICONE JOINT SEALERS.

③ REMOVE CONCRETE FROM PIPE ENDS AFTER SLIPFORMING OR FORM REMOVAL.

REVISION:

APPROVED: AUGUST 24, 2016
Kevin Western
STATE BRIDGE ENGINEER

CERTIFIED BY _____ LICENSED PROFESSIONAL ENGINEER _____ DATE
NAME: LIC. NO.

TITLE: SINGLE SLOPE CONCRETE BARRIER 42" (TYPE S, TL-4)
INTEGRAL OR SEMI-INTEGRAL ABUTMENT WITH GUARDRAIL CONNECTION (WITHOUT CONCRETE WEARING COURSE)

DES: DR: CHK: CHK:

SHEET NO. OF SHEETS

APPROVED:

FIG. 5-397.140(A)

BRIDGE NO.

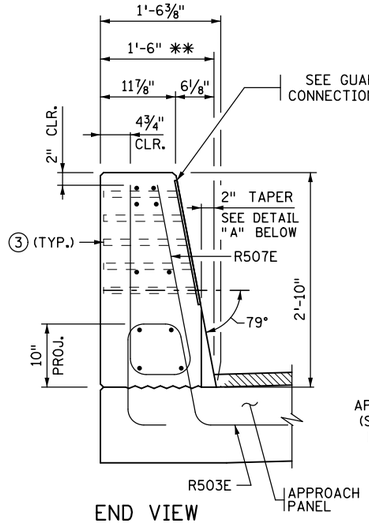

END VIEW

** DIMENSION SHOWN IS TO THE TOP OF THE WEARING COURSE AT GUTTERLINE.

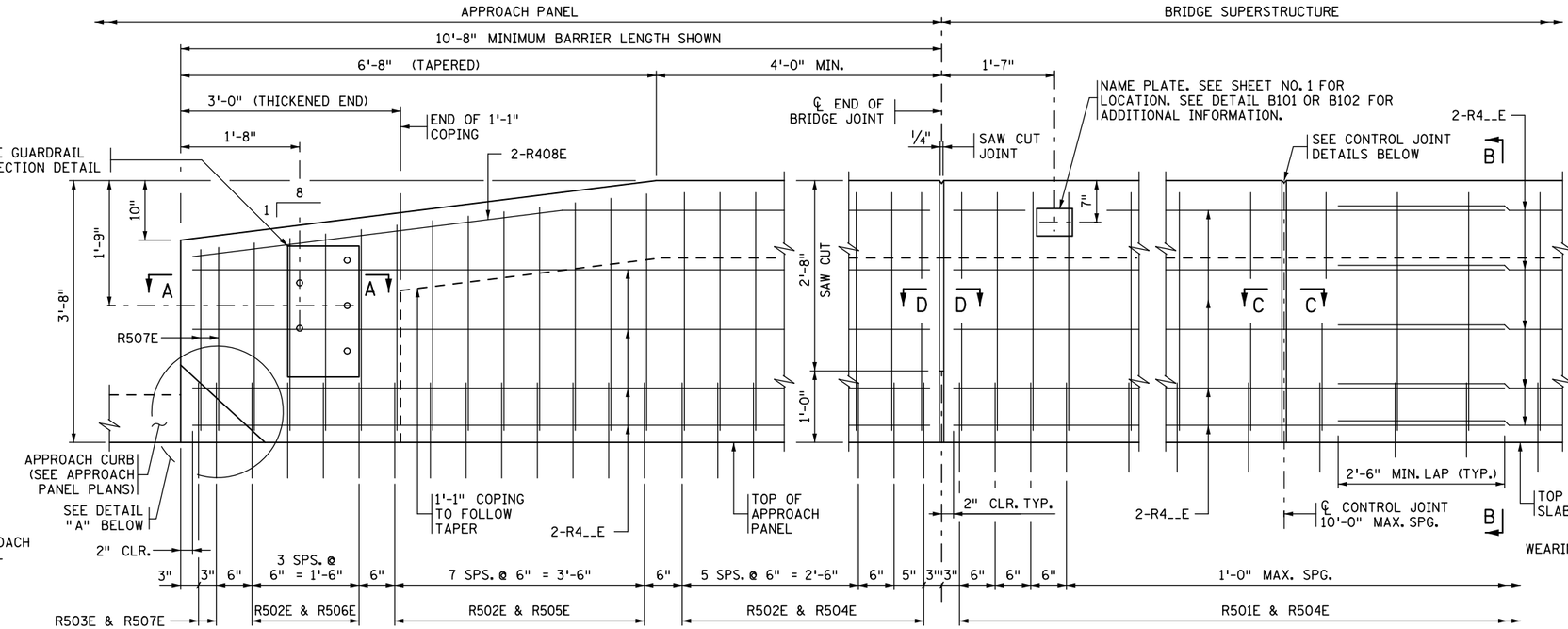

JOINT AT ABUTMENT

(INTEGRAL OR SEMI-INTEGRAL ABUTMENT)

CONTROL JOINT

INSIDE ELEVATION OF BARRIER

CONCRETE WEARING COURSE NOT SHOWN

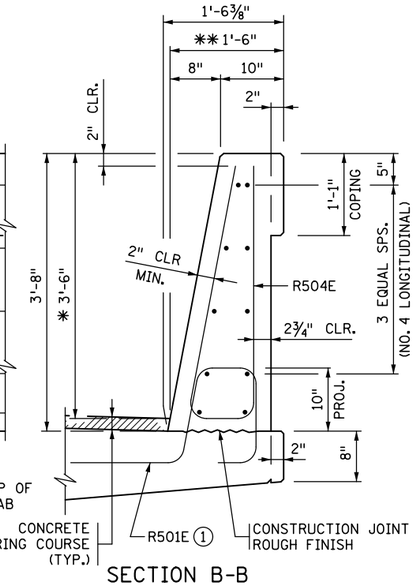

SECTION B-B

** DIMENSION SHOWN IS TO THE TOP OF THE WEARING COURSE AT GUTTERLINE.

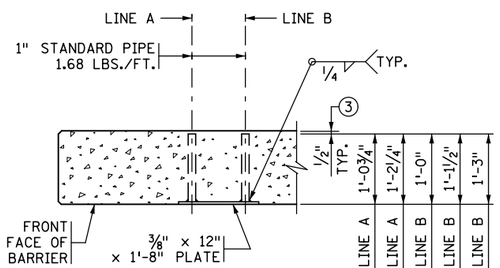

SECTION A-A

(REINFORCEMENT NOT SHOWN)

TRIM GUARDRAIL BOLTS SUCH THAT NO MORE THAN 1 1/2" PROTRUDES FROM BACK FACE OF BARRIER.

☆ DIMENSIONS INCLUDE 3/8" PLATE

DESIGNER NOTE
(REMOVE PRIOR TO PLOTTING FINAL PLAN):

MINIMUM BARRIER LENGTH ON APPROACH PANEL IS 10'-8" WITH MINIMUM OF 22 R502E AND R503E DOWELS WITH ACCOMPANYING APPROPRIATE BARRIER VERTICAL BARS, 12" MAX. SPACING.
VERIFY APPROACH BARRIER LENGTH, NEED FOR A GUARDRAIL CONNECTION, AND VERTICAL TAPER WITH ROADWAY DESIGNER.
REFER TO MEMO TO DESIGNERS (2016-01) FOR ADDITIONAL REQUIREMENTS REGARDING BARRIER PLACEMENT.

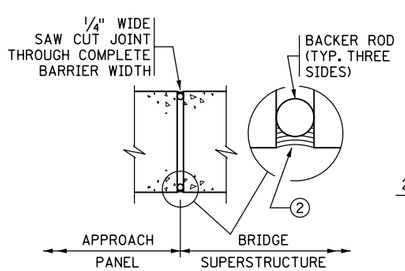

SECTION D-D

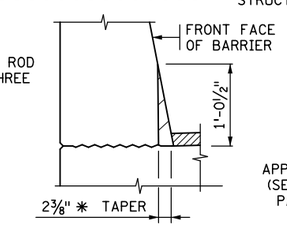

VIEW F-F

AT BARRIER END

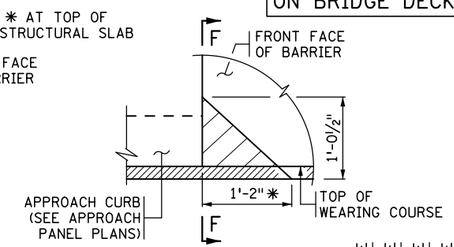

DETAIL "A"

ELEVATION VIEW
(WEARING COURSE SHOWN)

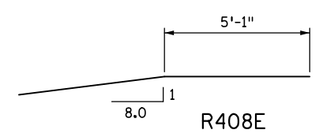

R408E

BILL OF REINFORCEMENT FOR BARRIER

BAR	NO.	LENGTH	SHAPE	LOCATION
R501E		5'-4"		BARRIER DOWEL
R502E		5'-6"		BARRIER DOWEL
R503E		5'-5"		BARRIER DOWEL
R504E		7'-6"		BARRIER VERTICAL
R505E	-- SER. OF 4	6'-7" TO 7'-5"		BARRIER VERTICAL
R506E	-- SER. OF 4	6'-1" TO 6'-5"		BARRIER VERTICAL
R507E		5'-10"		BARRIER VERTICAL
R408E		10'-3"		BARRIER LONGIT.
R4__E				BARRIER LONGIT.
R4__E				BARRIER LONGIT.
R4__E				BARRIER LONGIT.
R4__E				BARRIER LONGIT.
R4__E				BARRIER LONGIT.

BARRIER MEETS NCHRP 350 TL-4 REQUIREMENTS ON BRIDGE DECK AND TL-3 ON APPROACH PANEL.

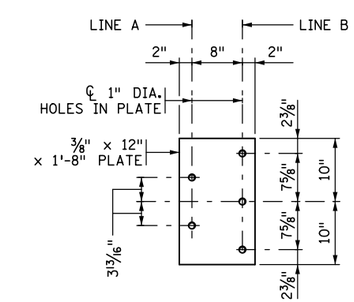

GUARDRAIL CONNECTION DETAIL

GALVANIZE AFTER FABRICATION PER SPEC. 3394
ESTIMATED WEIGHT = 35 LBS.

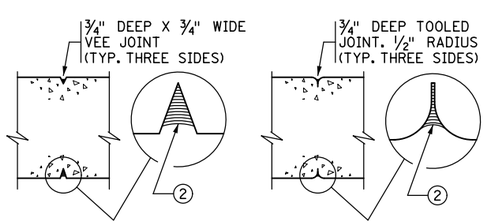

SECTION C-C

CONTRACTOR OPTION 1

SECTION C-C

CONTRACTOR OPTION 2

CONTROL JOINT DETAILS

WHEN USING SLIP FORM METHOD TO PLACE THE CONCRETE, CUT JOINT 3 INCHES DEEP USING MARGIN TROWEL OR SIMILAR MEANS IMMEDIATELY AFTER CONCRETE PLACEMENT (TYP. THREE SIDES).

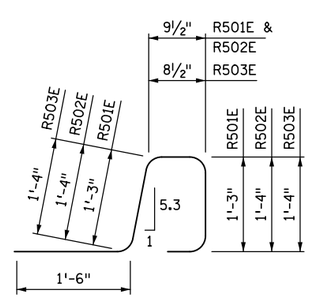

R501E, R502E, R503E

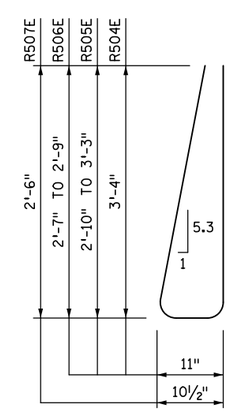

R504E, R505E, R506E, R507E

GENERAL NOTES

MEASURE PAYMENT LENGTH BETWEEN THE OUTSIDE ENDS OF THE BARRIER.

CONCRETE BARRIER = 586 LBS./FT. (0.145 CU. YDS./FT.)

FINISH ALL EDGES OF BARRIER WITH 1/2" CHAMFER, EXCEPT WHERE OTHERWISE NOTED.

SPACE CONTROL JOINTS AT 10 FT. MAXIMUM. REFER TO SUPERSTRUCTURE SHEET FOR SPECIFIC SPACING INFORMATION.

GUARDRAIL CONNECTION TO BE STRUCTURAL STEEL, SPEC. 3306.

GUARDRAIL CONNECTION AND NAME PLATE TO BE CONSIDERED INCIDENTAL TO BARRIER.

BARRIER QUANTITIES ARE LISTED IN SUMMARY OF QUANTITIES FOR SUPERSTRUCTURE.

① PLACE BAR ON TOP OF BOTTOM REINFORCEMENT MAT IN DECK.

② JOINT SEALANT PER MnDOT APPROVED/QUALIFIED PRODUCTS LIST - CRACK AND JOINT MATERIALS - SILICONE JOINT SEALERS.

③ REMOVE CONCRETE FROM PIPE ENDS AFTER SLIPFORMING OR FORM REMOVAL.

REVISION:

APPROVED: AUGUST 24, 2016
Kevin Western
STATE BRIDGE ENGINEER

CERTIFIED BY _____ LICENSED PROFESSIONAL ENGINEER _____ DATE
NAME: LIC. NO.

TITLE: SINGLE SLOPE CONCRETE BARRIER 42" (TYPE S, TL-4)
INTEGRAL OR SEMI-INTEGRAL ABUTMENT WITH GUARDRAIL CONNECTION (WITH 2" CONCRETE WEARING COURSE)

DES: DR: CHK: CHK:

SHEET NO. OF SHEETS

FIG. 5-397.140(B)

APPROVED:

BRIDGE NO.

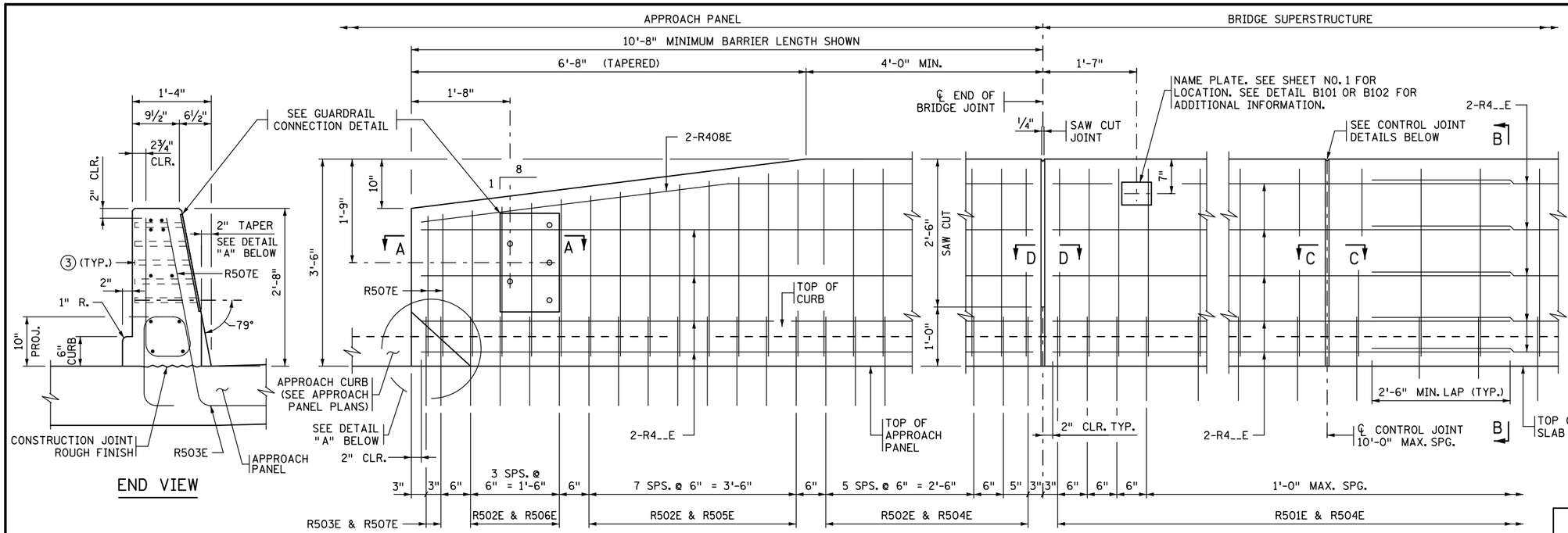

JOINT AT ABUTMENT

(INTEGRAL OR SEMI-INTEGRAL ABUTMENT)

CONTROL JOINT

INSIDE ELEVATION OF BARRIER

BARRIER MEETS NCHRP 350 TL-4 REQUIREMENTS ON BRIDGE DECK AND TL-3 ON APPROACH PANEL.

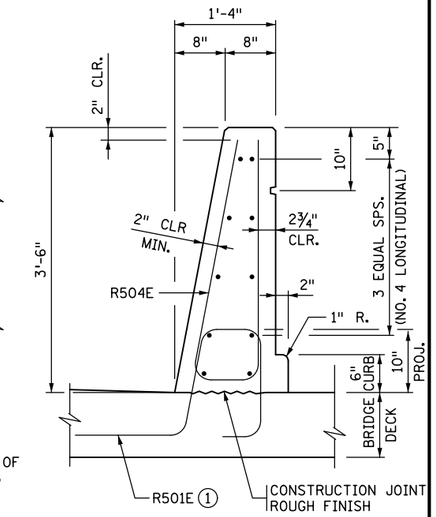

SECTION B-B

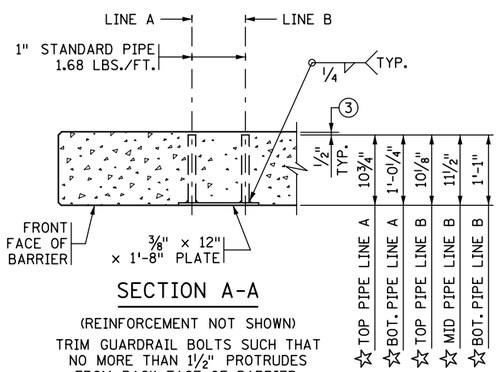

SECTION A-A

(REINFORCEMENT NOT SHOWN)

TRIM GUARDRAIL BOLTS SUCH THAT NO MORE THAN 1½" PROTRUDES FROM BACK FACE OF BARRIER.

☆ DIMENSIONS INCLUDE ⅜" PLATE

DESIGNER NOTE
(REMOVE PRIOR TO PLOTTING FINAL PLAN):

MINIMUM BARRIER LENGTH ON APPROACH PANEL IS 10'-8" WITH MINIMUM OF 22 R502E AND R503E DOWELS WITH ACCOMPANYING APPROPRIATE BARRIER VERTICAL BARS, 12" MAX. SPACING.
VERIFY APPROACH BARRIER LENGTH, NEED FOR A GUARDRAIL CONNECTION, AND VERTICAL TAPER WITH ROADWAY DESIGNER.
REFER TO MEMO TO DESIGNERS (2016-01) FOR ADDITIONAL REQUIREMENTS REGARDING BARRIER PLACEMENT.

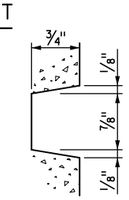

BARRIER RUSTICATION

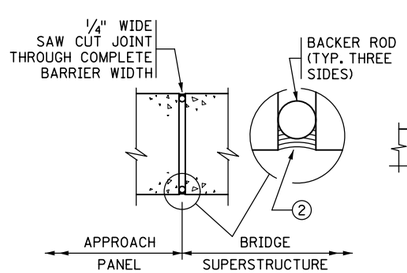

SECTION D-D

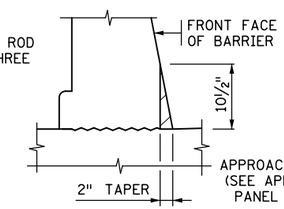

VIEW F-F

AT BARRIER END

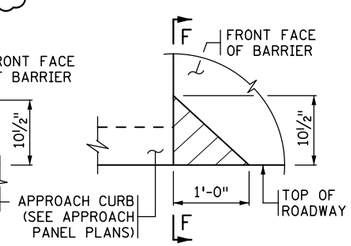

DETAIL "A"

ELEVATION VIEW

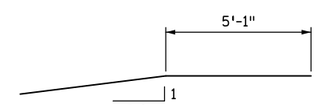

R408E

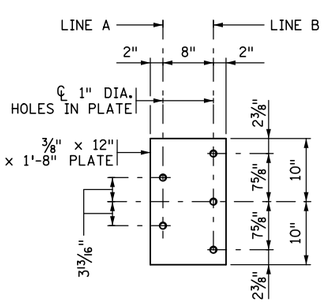

GUARDRAIL CONNECTION DETAIL

GALVANIZE AFTER FABRICATION PER SPEC. 3394
ESTIMATED WEIGHT = 34 LBS.

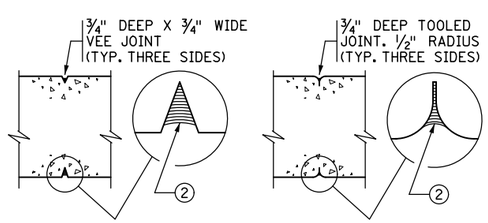

SECTION C-C
CONTRACTOR OPTION 1

SECTION C-C
CONTRACTOR OPTION 2

CONTROL JOINT DETAILS

WHEN USING SLIP FORM METHOD TO PLACE THE CONCRETE, CUT JOINT 3 INCHES DEEP USING MARGIN TROWEL OR SIMILAR MEANS IMMEDIATELY AFTER CONCRETE PLACEMENT (TYP. THREE SIDES).

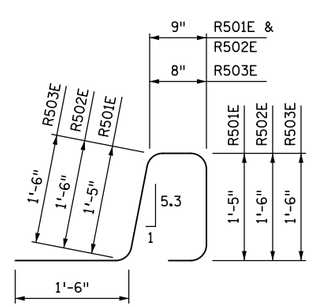

R501E, R502E, R503E

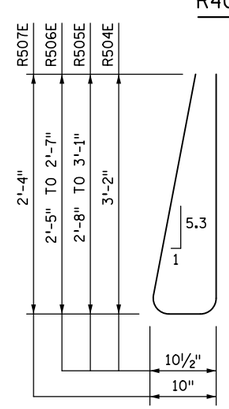

R504E, R505E, R506E, R507E

BILL OF REINFORCEMENT FOR BARRIER

BAR	NO.	LENGTH	SHAPE	LOCATION
R501E		5'-7"		BARRIER DOWEL
R502E		5'-9"		BARRIER DOWEL
R503E		5'-8"		BARRIER DOWEL
R504E		7'-2"		BARRIER VERTICAL
R505E	-- SER. OF 4	6'-3" TO 7'-1"		BARRIER VERTICAL
R506E	-- SER. OF 4	5'-9" TO 6'-1"		BARRIER VERTICAL
R507E		5'-6"		BARRIER VERTICAL
R408E		10'-3"		BARRIER LONGIT.
R4__E				BARRIER LONGIT.
R4__E				BARRIER LONGIT.
R4__E				BARRIER LONGIT.
R4__E				BARRIER LONGIT.
R4__E				BARRIER LONGIT.
R4__E				BARRIER LONGIT.
R4__E				BARRIER LONGIT.

GENERAL NOTES

MEASURE PAYMENT LENGTH BETWEEN THE OUTSIDE ENDS OF THE BARRIER.

CONCRETE BARRIER = 537 LBS./FT. (0.133 CU. YDS./FT.)

FINISH ALL EDGES OF BARRIER WITH ½" CHAMFER, EXCEPT WHERE OTHERWISE NOTED.

SPACE CONTROL JOINTS AT 10 FT. MAXIMUM. REFER TO SUPERSTRUCTURE SHEET FOR SPECIFIC SPACING INFORMATION.

GUARDRAIL CONNECTION TO BE STRUCTURAL STEEL, SPEC. 3306.

GUARDRAIL CONNECTION AND NAME PLATE TO BE CONSIDERED INCIDENTAL TO BARRIER.

BARRIER QUANTITIES ARE LISTED IN SUMMARY OF QUANTITIES FOR SUPERSTRUCTURE.

① PLACE BAR ON TOP OF BOTTOM REINFORCEMENT MAT IN DECK.

② JOINT SEALANT PER MnDOT APPROVED/QUALIFIED PRODUCTS LIST - CRACK AND JOINT MATERIALS - SILICONE JOINT SEALERS.

③ REMOVE CONCRETE FROM PIPE ENDS AFTER SLIPFORMING OR FORM REMOVAL.

REVISION:

APPROVED: AUGUST 24, 2016
Kevin Western
STATE BRIDGE ENGINEER

CERTIFIED BY _____ LICENSED PROFESSIONAL ENGINEER _____ DATE
NAME: LIC. NO.

TITLE: SINGLE SLOPE CONCRETE BARRIER 42" (TYPE S, TL-4)
INTEGRAL OR SEMI-INTEGRAL ABUTMENT WITH BRIDGE SLAB SIDEWALK AND GUARDRAIL CONNECTION (WITHOUT CONCRETE WEARING COURSE)

DES: DR:
CHK: CHK:
SHEET NO. OF SHEETS

FIG. 5-397.140(C)

APPROVED:

BRIDGE NO.

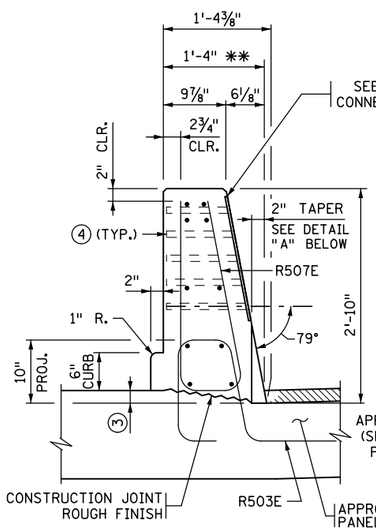

END VIEW

** DIMENSION SHOWN IS TO THE TOP OF THE WEARING COURSE AT GUTTERLINE.

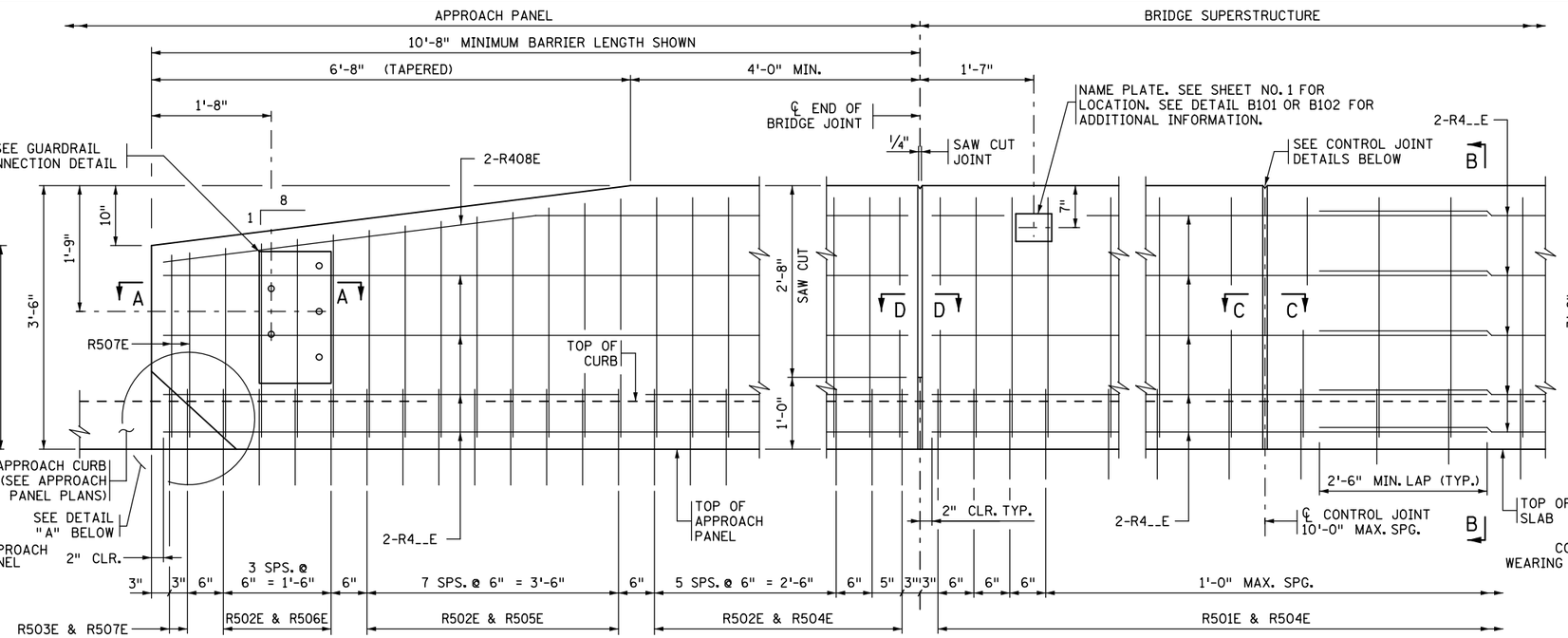

JOINT AT ABUTMENT

(INTEGRAL OR SEMI-INTEGRAL ABUTMENT)

CONTROL JOINT

INSIDE ELEVATION OF BARRIER

CONCRETE WEARING COURSE NOT SHOWN

BARRIER MEETS NCHRP 350 TL-4 REQUIREMENTS ON BRIDGE DECK AND TL-3 ON APPROACH PANEL.

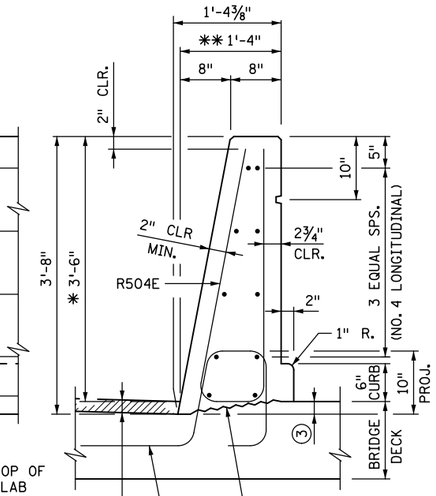

SECTION B-B

** DIMENSION SHOWN IS TO THE TOP OF THE WEARING COURSE AT GUTTERLINE.

BILL OF REINFORCEMENT FOR BARRIER

BAR	NO.	LENGTH	SHAPE	LOCATION
R501E		5'-4"		BARRIER DOWEL
R502E		5'-6"		BARRIER DOWEL
R503E		5'-5"		BARRIER DOWEL
R504E		7'-6"		BARRIER VERTICAL
R505E	-- SER. OF 4	6'-7" TO 7'-5"		BARRIER VERTICAL
R506E	-- SER. OF 4	6'-1" TO 6'-5"		BARRIER VERTICAL
R507E		5'-10"		BARRIER VERTICAL
R408E		10'-3"		BARRIER LONGIT.
R4__E				BARRIER LONGIT.
R4__E				BARRIER LONGIT.
R4__E				BARRIER LONGIT.
R4__E				BARRIER LONGIT.

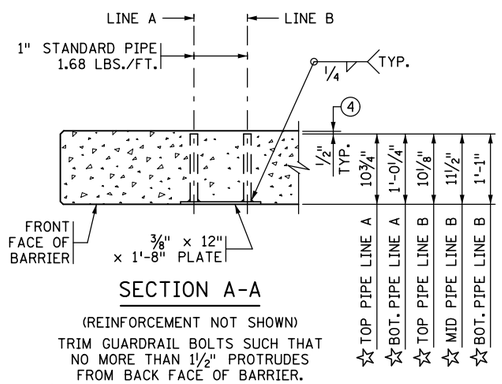

SECTION A-A

(REINFORCEMENT NOT SHOWN)

TRIM GUARDRAIL BOLTS SUCH THAT NO MORE THAN 1½" PROTRUDES FROM BACK FACE OF BARRIER.

☆ DIMENSIONS INCLUDE ⅜" PLATE

DESIGNER NOTE
(REMOVE PRIOR TO PLOTTING FINAL PLAN):

MINIMUM BARRIER LENGTH ON APPROACH PANEL IS 10'-8" WITH MINIMUM OF 22 R502E AND R503E DOWELS WITH ACCOMPANYING APPROPRIATE BARRIER VERTICAL BARS, 12" MAX. SPACING.
VERIFY APPROACH BARRIER LENGTH, NEED FOR A GUARDRAIL CONNECTION, AND VERTICAL TAPER WITH ROADWAY DESIGNER.
REFER TO MEMO TO DESIGNERS (2016-01) FOR ADDITIONAL REQUIREMENTS REGARDING BARRIER PLACEMENT.

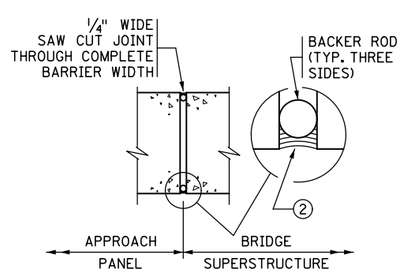

SECTION D-D

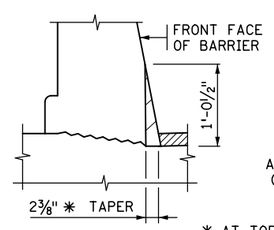

VIEW F-F

AT BARRIER END

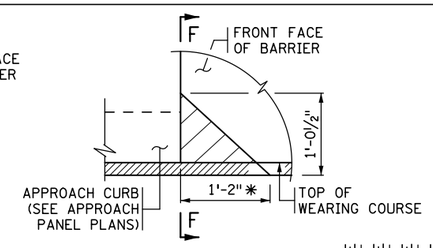

* AT TOP OF STRUCTURAL SLAB

DETAIL "A"

ELEVATION VIEW
(WEARING COURSE SHOWN)

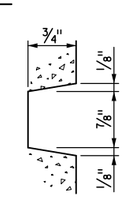

BARRIER RUSTICATION

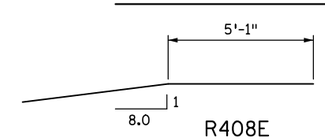

R408E

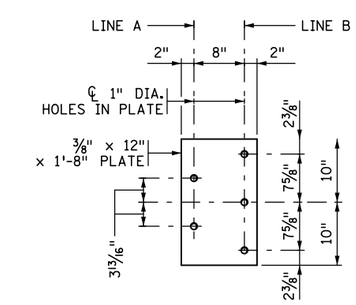

GUARDRAIL CONNECTION DETAIL

GALVANIZE AFTER FABRICATION PER SPEC. 3394
ESTIMATED WEIGHT = 34 LBS.

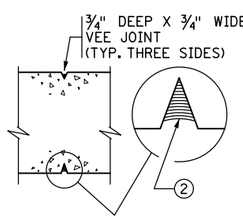

SECTION C-C

CONTRACTOR OPTION 1

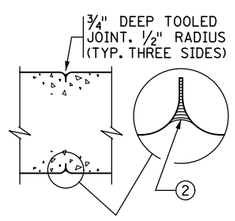

SECTION C-C

CONTRACTOR OPTION 2

CONTROL JOINT DETAILS

WHEN USING SLIP FORM METHOD TO PLACE THE CONCRETE, CUT JOINT 3 INCHES DEEP USING MARGIN TROWEL OR SIMILAR MEANS IMMEDIATELY AFTER CONCRETE PLACEMENT (TYP. THREE SIDES).

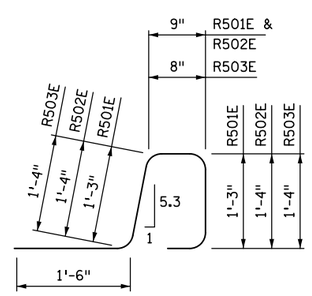

R501E, R502E, R503E

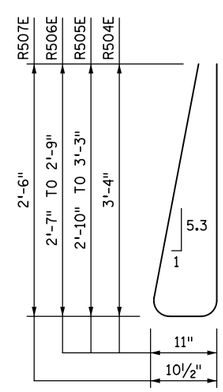

R504E, R505E, R506E, R507E

GENERAL NOTES

MESAURE PAYMENT LENGTH BETWEEN THE OUTSIDE ENDS OF THE BARRIER.

CONCRETE BARRIER = 556 LBS./FT. (0.137 CU. YDS./FT.)

FINISH ALL EDGES OF BARRIER WITH ½" CHAMFER, EXCEPT WHERE OTHERWISE NOTED.

SPACE CONTROL JOINTS AT 10 FT. MAXIMUM. REFER TO SUPERSTRUCTURE SHEET FOR SPECIFIC SPACING INFORMATION.

GUARDRAIL CONNECTION TO BE STRUCTURAL STEEL, SPEC. 3306.

GUARDRAIL CONNECTION AND NAME PLATE TO BE CONSIDERED INCIDENTAL TO BARRIER.

BARRIER QUANTITIES ARE LISTED IN SUMMARY OF QUANTITIES FOR SUPERSTRUCTURE.

① PLACE BAR ON TOP OF BOTTOM REINFORCEMENT MAT IN DECK.

② JOINT SEALANT PER MnDOT APPROVED/QUALIFIED PRODUCTS LIST - CRACK AND JOINT MATERIALS - SILICONE JOINT SEALERS.

③ DIMENSIONS TO BE DETERMINED BASED ON THE BRIDGE DECK SLOPE.

④ REMOVE CONCRETE FROM PIPE ENDS AFTER SLIPFORMING OR FORM REMOVAL.

REVISION:

APPROVED: AUGUST 24, 2016
Kevin Western
STATE BRIDGE ENGINEER

CERTIFIED BY _____ LICENSED PROFESSIONAL ENGINEER _____ DATE
NAME: LIC. NO.

TITLE: SINGLE SLOPE CONCRETE BARRIER 42" (TYPE S, TL-4)
INTEGRAL OR SEMI-INTEGRAL ABUTMENT WITH BRIDGE SLAB SIDEWALK AND GUARDRAIL CONNECTION (WITH 2" CONCRETE WEARING COURSE)

DES: DR: CHK: CHK:
SHEET NO. OF SHEETS

FIG. 5-397.140(D)
APPROVED:
BRIDGE NO.

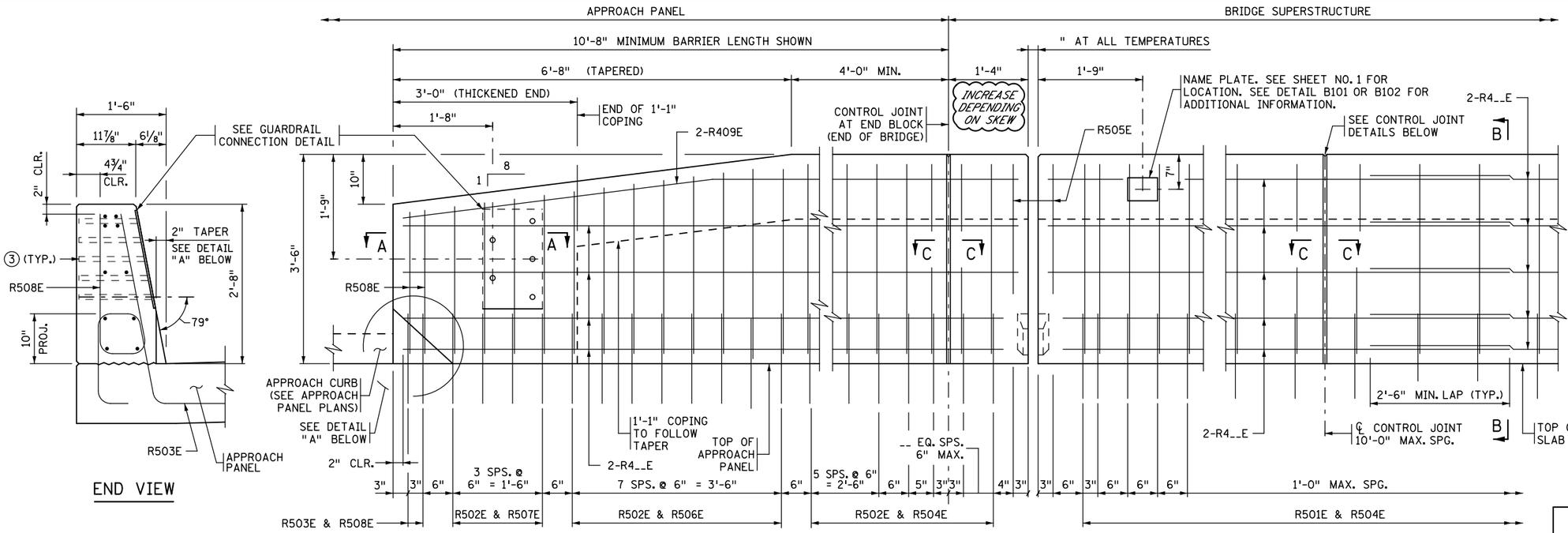

END VIEW

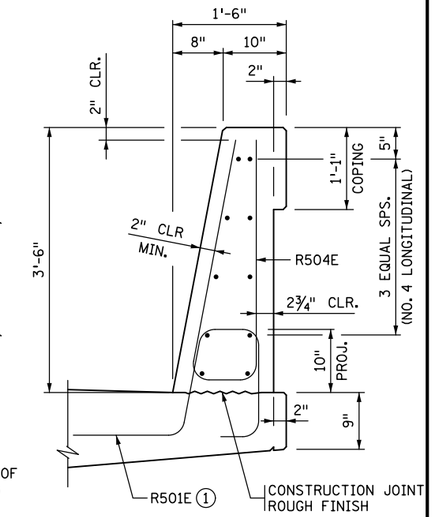

SECTION B-B

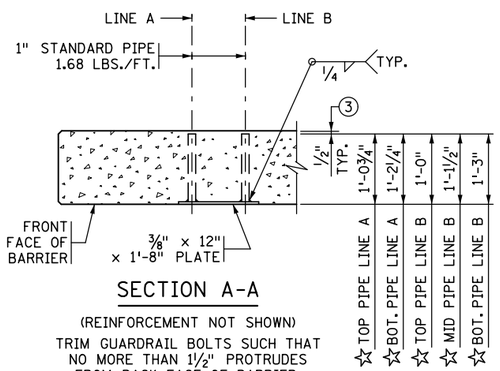

SECTION A-A

(REINFORCEMENT NOT SHOWN)

TRIM GUARDRAIL BOLTS SUCH THAT NO MORE THAN 1½" PROTRUDES FROM BACK FACE OF BARRIER.

☆ DIMENSIONS INCLUDE ⅜" PLATE

DESIGNER NOTE
(REMOVE PRIOR TO PLOTTING FINAL PLAN):

MINIMUM BARRIER LENGTH ON APPROACH PANEL IS 10'-8" WITH MINIMUM OF 22 R502E AND R503E DOWELS WITH ACCOMPANYING APPROPRIATE BARRIER VERTICAL BARS, 12" MAX. SPACING.
VERIFY APPROACH BARRIER LENGTH, NEED FOR A GUARDRAIL CONNECTION, AND VERTICAL TAPER WITH ROADWAY DESIGNER.
REFER TO MEMO TO DESIGNERS (2016-01) FOR ADDITIONAL REQUIREMENTS REGARDING BARRIER PLACEMENT.

EXPANSION JOINT ④

EXPANSION DEVICE NOT SHOWN

CONTROL JOINT

INSIDE ELEVATION OF BARRIER

BARRIER MEETS NCHRP 350 TL-4 REQUIREMENTS ON BRIDGE DECK AND TL-3 ON APPROACH PANEL.

BILL OF REINFORCEMENT FOR BARRIER

BAR	NO.	LENGTH	SHAPE	LOCATION
R501E		5'-7"		BARRIER DOWEL
R502E		5'-9"		BARRIER DOWEL
R503E		5'-8"		BARRIER DOWEL
R504E		7'-2"		BARRIER VERTICAL
R505E		5'-0"		BARRIER VERTICAL
R506E	-- SER. OF 4	6'-3" TO 7'-1"		BARRIER VERTICAL
R507E	-- SER. OF 4	5'-9" TO 6'-1"		BARRIER VERTICAL
R508E		5'-6"		BARRIER VERTICAL
R409E		11'-7"		BARRIER LONGIT.
R4__E				BARRIER LONGIT.
R4__E				BARRIER LONGIT.
R4__E				BARRIER LONGIT.
R4__E				BARRIER LONGIT.

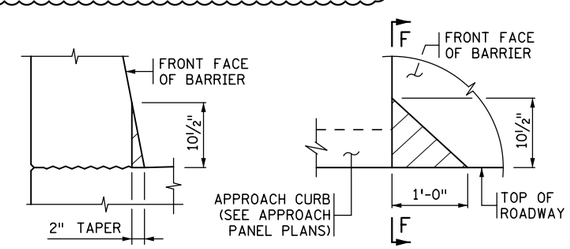

VIEW F-F

AT BARRIER END

DETAIL "A"

ELEVATION VIEW

R409E

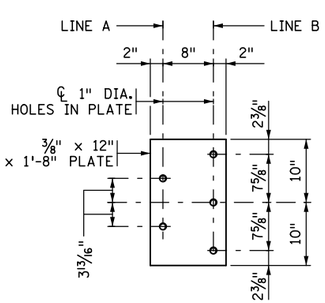

GUARDRAIL CONNECTION DETAIL

GALVANIZE AFTER FABRICATION PER SPEC. 3394
ESTIMATED WEIGHT = 35 LBS.

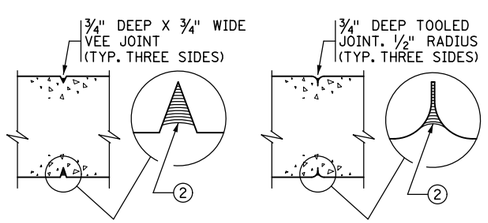

SECTION C-C

CONTRACTOR OPTION 1

SECTION C-C

CONTRACTOR OPTION 2

CONTROL JOINT DETAILS

WHEN USING SLIP FORM METHOD TO PLACE THE CONCRETE, CUT JOINT 3 INCHES DEEP USING MARGIN TROWEL OR SIMILAR MEANS IMMEDIATELY AFTER CONCRETE PLACEMENT (TYP. THREE SIDES).

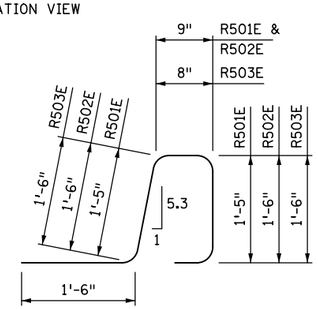

R501E, R502E, R503E

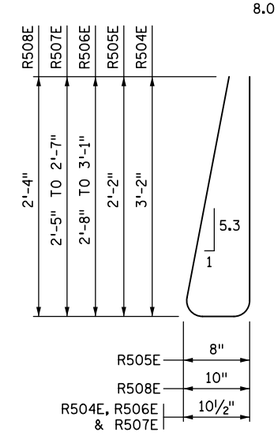

R504E, R505E, R506E, R507E, R508E

GENERAL NOTES

MEASURE PAYMENT LENGTH BETWEEN THE OUTSIDE ENDS OF THE BARRIER.

CONCRETE BARRIER = 552 LBS./FT. (0.136 CU. YDS./FT.)

FINISH ALL EDGES OF BARRIER WITH ½" CHAMFER, EXCEPT WHERE OTHERWISE NOTED.

SPACE CONTROL JOINTS AT 10 FT. MAXIMUM. REFER TO SUPERSTRUCTURE SHEET FOR SPECIFIC SPACING INFORMATION.

GUARDRAIL CONNECTION TO BE STRUCTURAL STEEL, SPEC. 3306.

GUARDRAIL CONNECTION AND NAME PLATE TO BE CONSIDERED INCIDENTAL TO BARRIER.

BARRIER QUANTITIES ARE LISTED IN SUMMARY OF QUANTITIES FOR SUPERSTRUCTURE.

① PLACE BAR ON TOP OF BOTTOM REINFORCEMENT MAT IN DECK.

② JOINT SEALANT PER MnDOT APPROVED/QUALIFIED PRODUCTS LIST - CRACK AND JOINT MATERIALS - SILICONE JOINT SEALERS.

③ REMOVE CONCRETE FROM PIPE ENDS AFTER SLIPFORMING OR FORM REMOVAL.

④ REFER TO "WATERPROOF EXPANSION DEVICE" STANDARD PLANS FOR COVER PLATE DETAILS.

REVISION:

APPROVED: AUGUST 24, 2016
Kevin Western
STATE BRIDGE ENGINEER

CERTIFIED BY
LICENSED PROFESSIONAL ENGINEER DATE
NAME: LIC. NO.

TITLE: SINGLE SLOPE CONCRETE BARRIER 42" (TYPE S, TL-4)
PARAPET ABUTMENT WITH GUARDRAIL CONNECTION (WITHOUT CONCRETE WEARING COURSE)

DES: DR:
CHK: CHK:
SHEET NO. OF SHEETS

APPROVED:

FIG. 5-397.141(A)

BRIDGE NO.

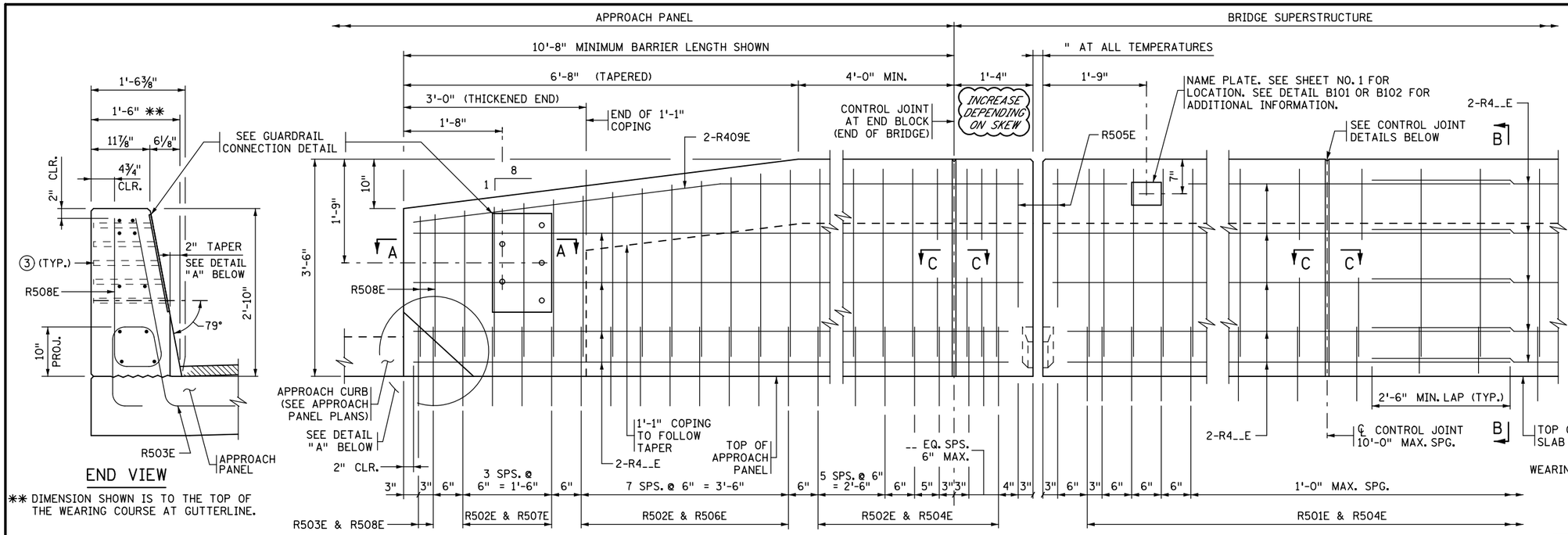

END VIEW

** DIMENSION SHOWN IS TO THE TOP OF THE WEARING COURSE AT GUTTERLINE.

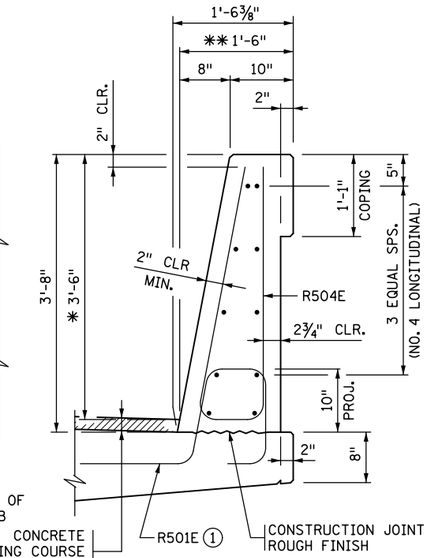

SECTION B-B

** DIMENSION SHOWN IS TO THE TOP OF THE WEARING COURSE AT GUTTERLINE.

EXPANSION JOINT ④

EXPANSION DEVICE NOT SHOWN

CONTROL JOINT

INSIDE ELEVATION OF BARRIER

CONCRETE WEARING COURSE NOT SHOWN

BARRIER MEETS NCHRP 350 TL-4 REQUIREMENTS ON BRIDGE DECK AND TL-3 ON APPROACH PANEL.

DESIGNER NOTE
(REMOVE PRIOR TO PLOTTING FINAL PLAN):

MINIMUM BARRIER LENGTH ON APPROACH PANEL IS 10'-8" WITH MINIMUM OF 22 R502E AND R503E DOWELS WITH ACCOMPANYING APPROPRIATE BARRIER VERTICAL BARS, 12" MAX. SPACING.
VERIFY APPROACH BARRIER LENGTH, NEED FOR A GUARDRAIL CONNECTION, AND VERTICAL TAPER WITH ROADWAY DESIGNER.
REFER TO MEMO TO DESIGNERS (2016-01) FOR ADDITIONAL REQUIREMENTS REGARDING BARRIER PLACEMENT AND LINK WITH ADJACENT RETAINING WALLS.

BILL OF REINFORCEMENT FOR BARRIER

BAR	NO.	LENGTH	SHAPE	LOCATION
R501E		5'-4"		BARRIER DOWEL
R502E		5'-6"		BARRIER DOWEL
R503E		5'-5"		BARRIER DOWEL
R504E		7'-6"		BARRIER VERTICAL
R505E		5'-4"		BARRIER VERTICAL
R506E	-- SER. OF 4	6'-7" TO 7'-5"		BARRIER VERTICAL
R507E	-- SER. OF 4	6'-1" TO 6'-5"		BARRIER VERTICAL
R508E		5'-10"		BARRIER VERTICAL
R409E		11'-7"		BARRIER LONGIT.
R4__E				BARRIER LONGIT.
R4__E				BARRIER LONGIT.
R4__E				BARRIER LONGIT.
R4__E				BARRIER LONGIT.

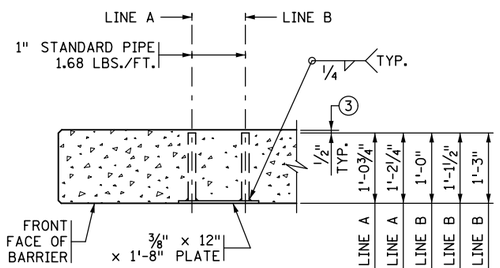

SECTION A-A

(REINFORCEMENT NOT SHOWN)

TRIM GUARDRAIL BOLTS SUCH THAT NO MORE THAN 1½" PROTRUDES FROM BACK FACE OF BARRIER.

☆ DIMENSIONS INCLUDE ⅜" PLATE

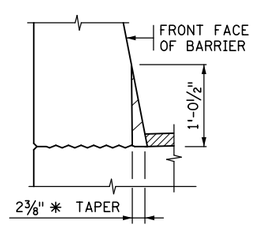

VIEW F-F

AT BARRIER END

* AT TOP OF STRUCTURAL SLAB

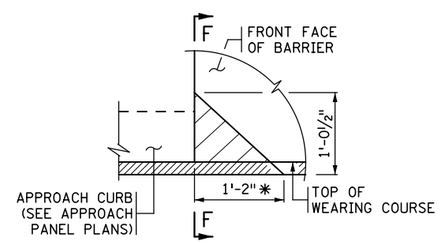

DETAIL "A"

ELEVATION VIEW
(WEARING COURSE SHOWN)

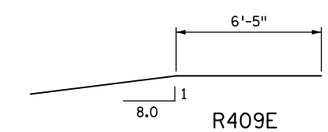

R409E

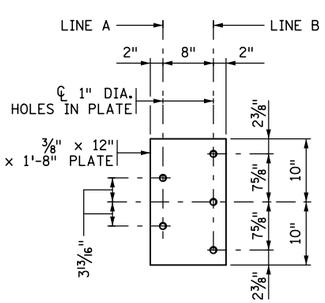

GUARDRAIL CONNECTION DETAIL

GALVANIZE AFTER FABRICATION PER SPEC. 3394
ESTIMATED WEIGHT = 35 LBS.

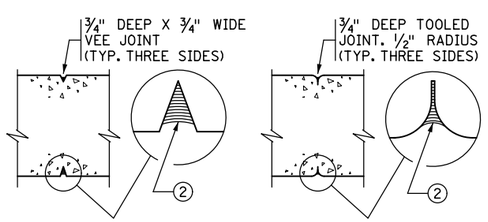

SECTION C-C

CONTRACTOR OPTION 1

SECTION C-C

CONTRACTOR OPTION 2

CONTROL JOINT DETAILS

WHEN USING SLIP FORM METHOD TO PLACE THE CONCRETE, CUT JOINT 3 INCHES DEEP USING MARGIN TROWEL OR SIMILAR MEANS IMMEDIATELY AFTER CONCRETE PLACEMENT (TYP. THREE SIDES).

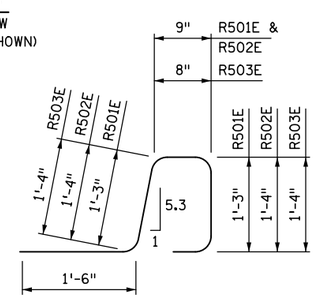

R501E, R502E & R503E

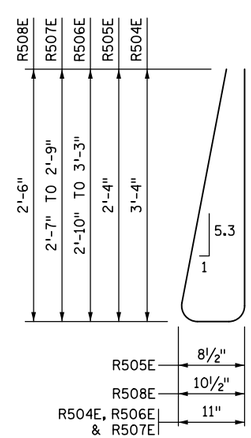

R504E, R505E, R506E, R507E, R508E

GENERAL NOTES

MEASURE PAYMENT LENGTH BETWEEN THE OUTSIDE ENDS OF THE BARRIER.

CONCRETE BARRIER = 586 LBS./FT. (0.145 CU. YDS./FT.)

FINISH ALL EDGES OF BARRIER WITH ½" CHAMFER, EXCEPT WHERE OTHERWISE NOTED.

SPACE CONTROL JOINTS AT 10 FT. MAXIMUM. REFER TO SUPERSTRUCTURE SHEET FOR SPECIFIC SPACING INFORMATION.

GUARDRAIL CONNECTION TO BE STRUCTURAL STEEL, SPEC. 3306.

GUARDRAIL CONNECTION AND NAME PLATE TO BE CONSIDERED INCIDENTAL TO BARRIER.

BARRIER QUANTITIES ARE LISTED IN SUMMARY OF QUANTITIES FOR SUPERSTRUCTURE.

① PLACE BAR ON TOP OF BOTTOM REINFORCEMENT MAT IN DECK.

② JOINT SEALANT PER MnDOT APPROVED/QUALIFIED PRODUCTS LIST - CRACK AND JOINT MATERIALS - SILICONE JOINT SEALERS.

③ REMOVE CONCRETE FROM PIPE ENDS AFTER SLIPFORMING OR FORM REMOVAL.

④ REFER TO "WATERPROOF EXPANSION DEVICE" STANDARD PLANS FOR COVER PLATE DETAILS.

FIG. 5-397.141(B)

REVISION:

APPROVED: AUGUST 24, 2016
Kevin Western
STATE BRIDGE ENGINEER

CERTIFIED BY
LICENSED PROFESSIONAL ENGINEER DATE
NAME: LIC. NO.

TITLE: SINGLE SLOPE CONCRETE BARRIER 42" (TYPE S, TL-4)
PARAPET ABUTMENT WITH GUARDRAIL CONNECTION (WITH 2" CONCRETE WEARING COURSE)

DES: DR: CHK: CHK:
SHEET NO. OF SHEETS

APPROVED:

BRIDGE NO.

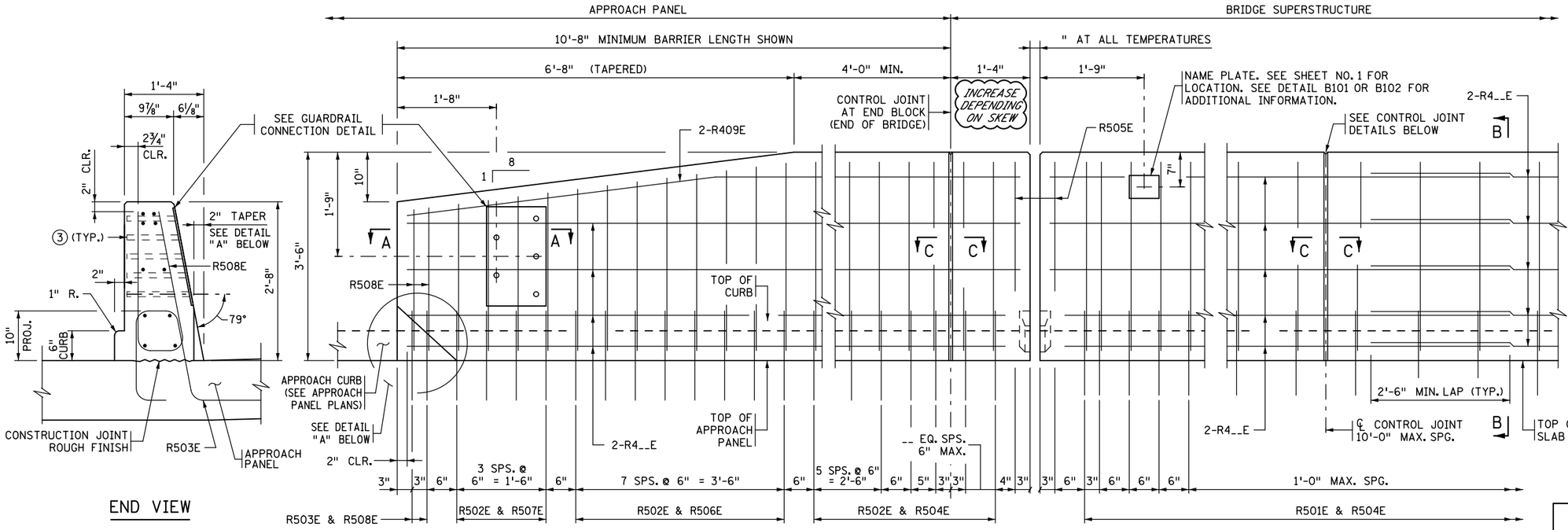

INSIDE ELEVATION OF BARRIER

BARRIER MEETS NCHRP 350 TL-4 REQUIREMENTS ON BRIDGE DECK AND TL-3 ON APPROACH PANEL.

END VIEW

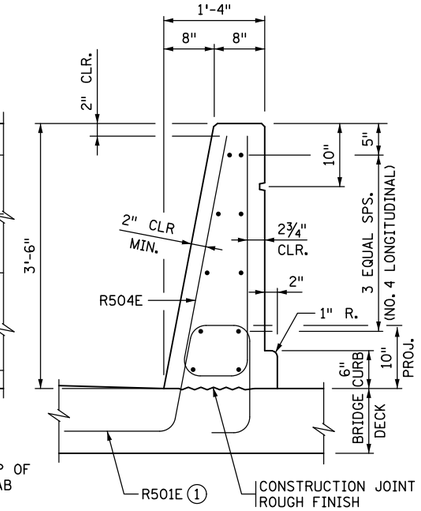

SECTION B-B

BILL OF REINFORCEMENT FOR BARRIER				
BAR	NO.	LENGTH	SHAPE	LOCATION
R501E		5'-7"		BARRIER DOWEL
R502E		5'-9"		BARRIER DOWEL
R503E		5'-8"		BARRIER DOWEL
R504E		7'-2"		BARRIER VERTICAL
R505E		5'-0"		BARRIER VERTICAL
R506E	-- SER. OF 4	6'-3" TO 7'-1"		BARRIER VERTICAL
R507E	-- SER. OF 4	5'-9" TO 6'-1"		BARRIER VERTICAL
R508E		5'-6"		BARRIER VERTICAL
R409E		11'-7"		BARRIER LONGIT.
R4__E				BARRIER LONGIT.
R4__E				BARRIER LONGIT.
R4__E				BARRIER LONGIT.
R4__E				BARRIER LONGIT.
R4__E				BARRIER LONGIT.

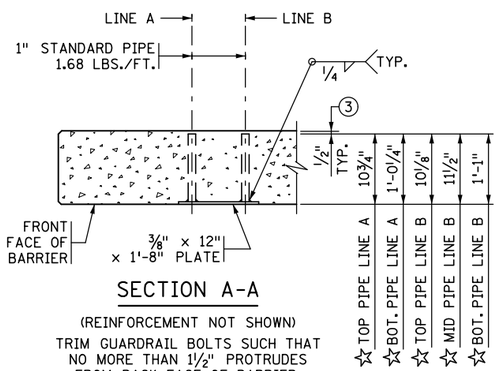

SECTION A-A

(REINFORCEMENT NOT SHOWN)

TRIM GUARDRAIL BOLTS SUCH THAT NO MORE THAN 1½" PROTRUDES FROM BACK FACE OF BARRIER.

☆ DIMENSIONS INCLUDE ⅜" PLATE

DESIGNER NOTE
(REMOVE PRIOR TO PLOTTING FINAL PLAN):

MINIMUM BARRIER LENGTH ON APPROACH PANEL IS 10'-8" WITH MINIMUM OF 22 R502E AND R503E DOWELS WITH ACCOMPANYING APPROPRIATE BARRIER VERTICAL BARS, 12" MAX. SPACING.
VERIFY APPROACH BARRIER LENGTH, NEED FOR A GUARDRAIL CONNECTION, AND VERTICAL TAPER WITH ROADWAY DESIGNER.
REFER TO MEMO TO DESIGNERS (2016-01) FOR ADDITIONAL REQUIREMENTS REGARDING BARRIER PLACEMENT.

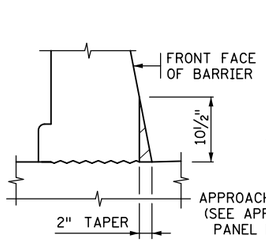

VIEW F-F

AT BARRIER END

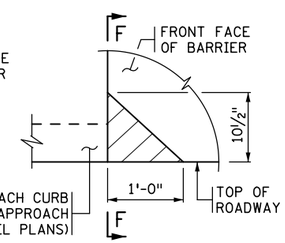

DETAIL "A"

ELEVATION VIEW

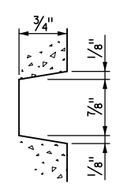

BARRIER RUSTICATION

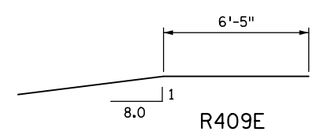

R409E

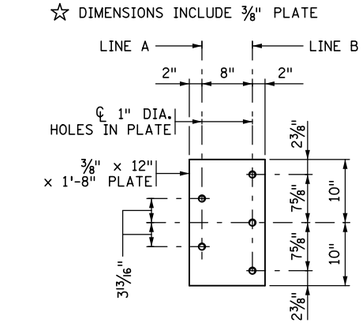

GUARDRAIL CONNECTION DETAIL

GALVANIZE AFTER FABRICATION PER SPEC. 3394
ESTIMATED WEIGHT = 34 LBS.

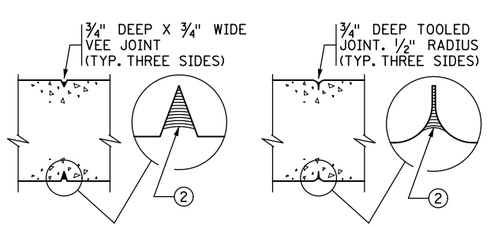

SECTION C-C

CONTRACTOR OPTION 1

SECTION C-C

CONTRACTOR OPTION 2

CONTROL JOINT DETAILS

WHEN USING SLIP FORM METHOD TO PLACE THE CONCRETE, CUT JOINT 3 INCHES DEEP USING MARGIN TROWEL OR SIMILAR MEANS IMMEDIATELY AFTER CONCRETE PLACEMENT (TYP. THREE SIDES).

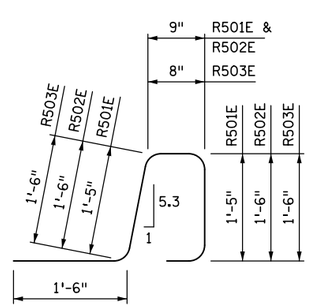

R501E, R502E, R503E

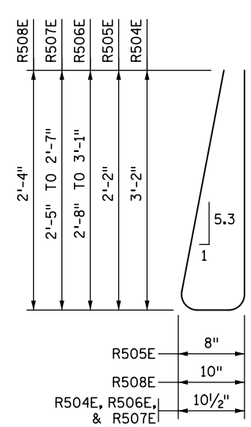

R504E, R505E, R506E, R507E, R508E

GENERAL NOTES

MEASURE PAYMENT LENGTH BETWEEN THE OUTSIDE ENDS OF THE BARRIER.

CONCRETE BARRIER = 537 LBS./FT. (0.133 CU. YDS./FT.)

FINISH ALL EDGES OF BARRIER WITH ½" CHAMFER, EXCEPT WHERE OTHERWISE NOTED.

SPACE CONTROL JOINTS AT 10 FT. MAXIMUM. REFER TO SUPERSTRUCTURE SHEET FOR SPECIFIC SPACING INFORMATION.

GUARDRAIL CONNECTION TO BE STRUCTURAL STEEL, SPEC. 3306.

GUARDRAIL CONNECTION AND NAME PLATE TO BE CONSIDERED INCIDENTAL TO BARRIER.

BARRIER QUANTITIES ARE LISTED IN SUMMARY OF QUANTITIES FOR SUPERSTRUCTURE.

① PLACE BAR ON TOP OF BOTTOM REINFORCEMENT MAT.

② JOINT SEALANT PER MnDOT APPROVED/QUALIFIED PRODUCTS LIST - CRACK AND JOINT MATERIALS - SILICONE JOINT SEALERS.

③ REMOVE CONCRETE FROM PIPE ENDS AFTER SLIPFORMING OR FORM REMOVAL.

④ REFER TO "WATERPROOF EXPANSION DEVICE" STANDARD PLANS FOR COVER PLATE DETAILS.

REVISION:

APPROVED: AUGUST 24, 2016
Kevin Western
STATE BRIDGE ENGINEER

CERTIFIED BY
LICENSED PROFESSIONAL ENGINEER DATE
NAME: LIC. NO.

TITLE: SINGLE SLOPE CONCRETE BARRIER 42" (TYPE S, TL-4)
PARAPET ABUTMENT WITH BRIDGE SLAB SIDEWALK AND GUARDRAIL CONNECTION (WITHOUT CONCRETE WEARING COURSE)

DES: DR: CHK: CHK:
SHEET NO. OF SHEETS

FIG. 5-397.141(C)

APPROVED:

BRIDGE NO.

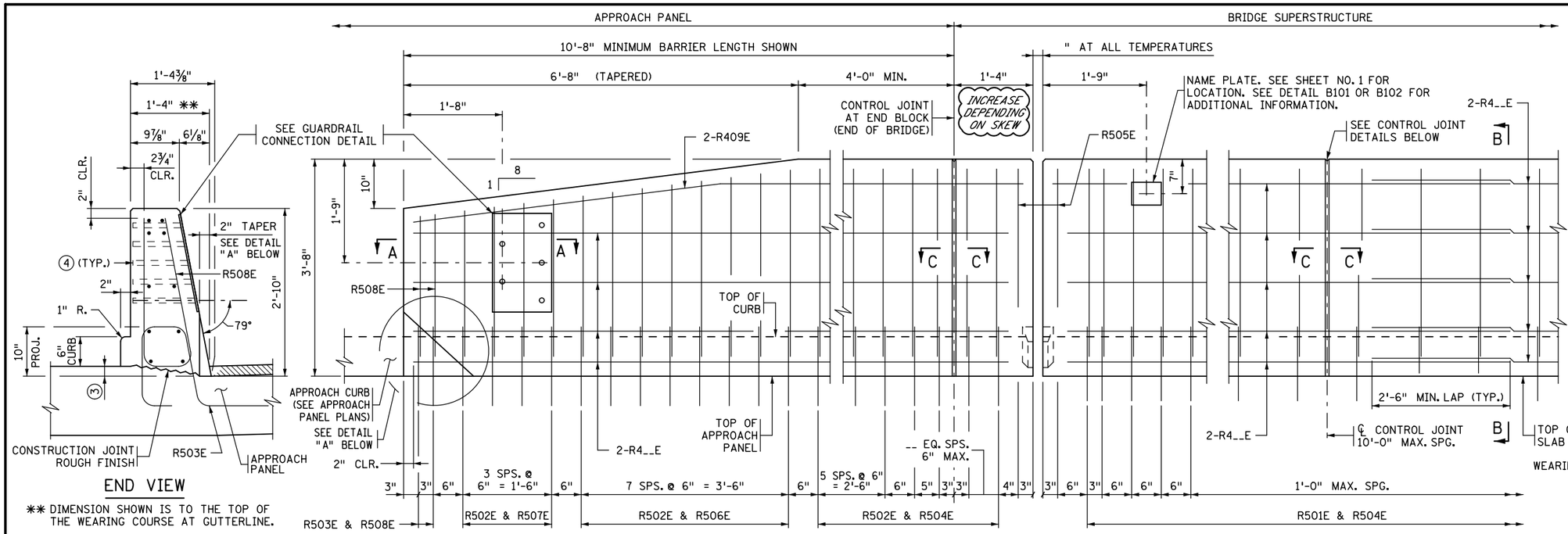

EXPANSION JOINT ⑤

EXPANSION DEVICE NOT SHOWN

CONTROL JOINT

INSIDE ELEVATION OF BARRIER

CONCRETE WEARING COURSE NOT SHOWN

BARRIER MEETS NCHRP 350 TL-4 REQUIREMENTS ON BRIDGE DECK AND TL-3 ON APPROACH PANEL.

END VIEW

** DIMENSION SHOWN IS TO THE TOP OF THE WEARING COURSE AT GUTTERLINE.

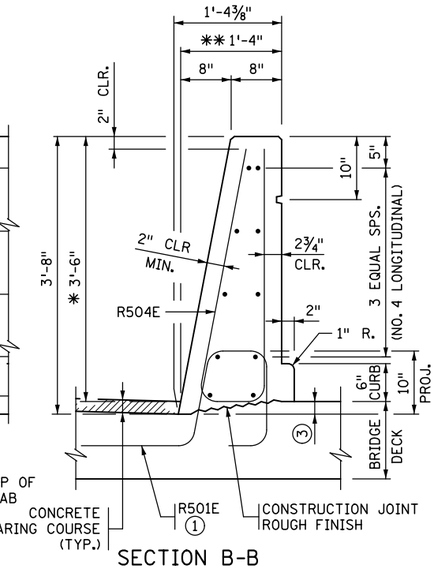

SECTION B-B

** DIMENSION SHOWN IS TO THE TOP OF THE WEARING COURSE AT GUTTERLINE.

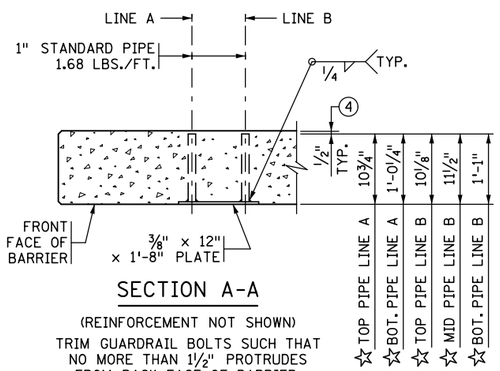

SECTION A-A

(REINFORCEMENT NOT SHOWN)

TRIM GUARDRAIL BOLTS SUCH THAT NO MORE THAN 1 1/2" PROTRUDES FROM BACK FACE OF BARRIER.

☆ DIMENSIONS INCLUDE 3/8" PLATE

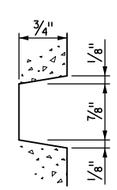

BARRIER RUSTICATION

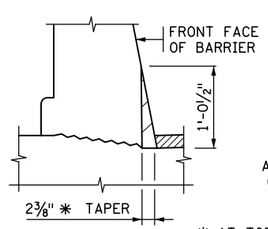

VIEW F-F

AT BARRIER END

* AT TOP OF STRUCTURAL SLAB

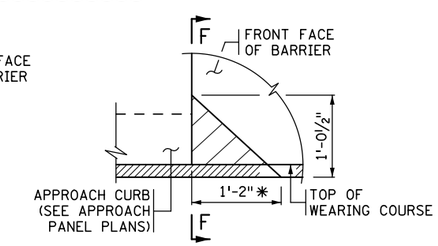

DETAIL "A"

ELEVATION VIEW (WEARING COURSE SHOWN)

R409E

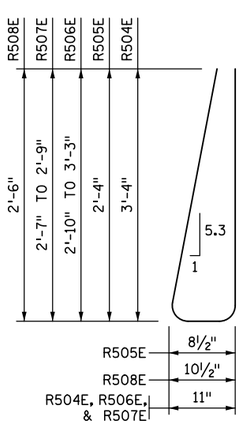

R504E, R505E, R506E, R507E, R508E

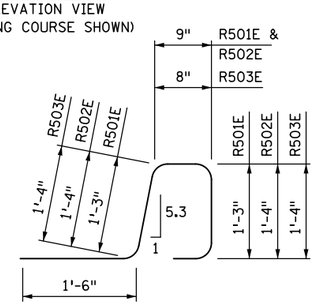

R501E, R502E, R503E

BILL OF REINFORCEMENT FOR BARRIER				
BAR	NO.	LENGTH	SHAPE	LOCATION
R501E		5'-4"		BARRIER DOWEL
R502E		5'-6"		BARRIER DOWEL
R503E		5'-5"		BARRIER DOWEL
R504E		7'-6"		BARRIER VERTICAL
R505E		5'-4"		BARRIER VERTICAL
R506E	-- SER. OF 4	6'-7" TO 7'-5"		BARRIER VERTICAL
R507E	-- SER. OF 4	6'-1" TO 6'-5"		BARRIER VERTICAL
R508E		5'-10"		BARRIER VERTICAL
R408E		11'-7"		BARRIER LONGIT.
R4__E				BARRIER LONGIT.
R4__E				BARRIER LONGIT.
R4__E				BARRIER LONGIT.
R4__E				BARRIER LONGIT.

DESIGNER NOTE
(REMOVE PRIOR TO PLOTTING FINAL PLAN):

MINIMUM BARRIER LENGTH ON APPROACH PANEL IS 10'-8" WITH MINIMUM OF 22 R502E AND R503E DOWELS WITH ACCOMPANYING APPROPRIATE BARRIER VERTICAL BARS, 12" MAX. SPACING.
VERIFY APPROACH BARRIER LENGTH, NEED FOR A GUARDRAIL CONNECTION, AND VERTICAL TAPER WITH ROADWAY DESIGNER.
REFER TO MEMO TO DESIGNERS (2016-01) FOR ADDITIONAL REQUIREMENTS REGARDING BARRIER PLACEMENT AND LINK WITH ADJACENT RETAINING WALLS.

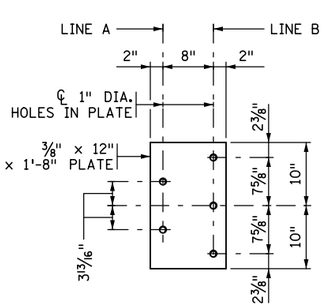

GUARDRAIL CONNECTION DETAIL

GALVANIZE AFTER FABRICATION PER SPEC. 3394
ESTIMATED WEIGHT = 34 LBS.

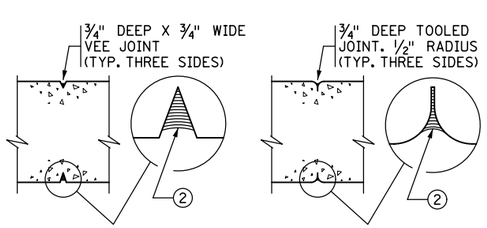

SECTION C-C

CONTRACTOR OPTION 1

SECTION C-C

CONTRACTOR OPTION 2

CONTROL JOINT DETAILS

WHEN USING SLIP FORM METHOD TO PLACE THE CONCRETE, CUT JOINT 3 INCHES DEEP USING MARGIN TROWEL OR SIMILAR MEANS IMMEDIATELY AFTER CONCRETE PLACEMENT (TYP. THREE SIDES).

GENERAL NOTES

MEASURE PAYMENT LENGTH BETWEEN THE OUTSIDE ENDS OF THE BARRIER.

CONCRETE BARRIER = 556 LBS./FT. (0.137 CU. YDS./FT.)

FINISH ALL EDGES OF BARRIER WITH 1/2" CHAMFER, EXCEPT WHERE OTHERWISE NOTED.

SPACE CONTROL JOINTS AT 10 FT. MAXIMUM. REFER TO SUPERSTRUCTURE SHEET FOR SPECIFIC SPACING INFORMATION.

GUARDRAIL CONNECTION TO BE STRUCTURAL STEEL, SPEC. 3306.

GUARDRAIL CONNECTION AND NAME PLATE TO BE CONSIDERED INCIDENTAL TO BARRIER.

BARRIER QUANTITIES ARE LISTED IN SUMMARY OF QUANTITIES FOR SUPERSTRUCTURE.

① PLACE BAR ON TOP OF BOTTOM REINFORCEMENT MAT IN DECK.
② JOINT SEALANT PER MnDOT APPROVED/QUALIFIED PRODUCTS LIST - CRACK AND JOINT MATERIALS - SILICONE JOINT SEALERS.
③ DIMENSIONS TO BE DETERMINED BASED ON THE BRIDGE DECK SLOPE.
④ REMOVE CONCRETE FROM PIPE ENDS AFTER SLIPFORMING OR FORM REMOVAL.
⑤ REFER TO "WATERPROOF EXPANSION DEVICE" STANDARD PLANS FOR COVER PLATE DETAILS.

FIG. 5-397.141(D)

REVISION:

APPROVED: AUGUST 24, 2016
Kevin Western
STATE BRIDGE ENGINEER

CERTIFIED BY
LICENSED PROFESSIONAL ENGINEER DATE
NAME: LIC. NO.

TITLE: SINGLE SLOPE CONCRETE BARRIER 42" (TYPE S, TL-4)
PARAPET ABUTMENT WITH BRIDGE SLAB SIDEWALK AND GUARDRAIL CONNECTION (WITH 2" CONCRETE WEARING COURSE)

DES: DR: CHK: CHK:
SHEET NO. OF SHEETS

APPROVED:

BRIDGE NO.

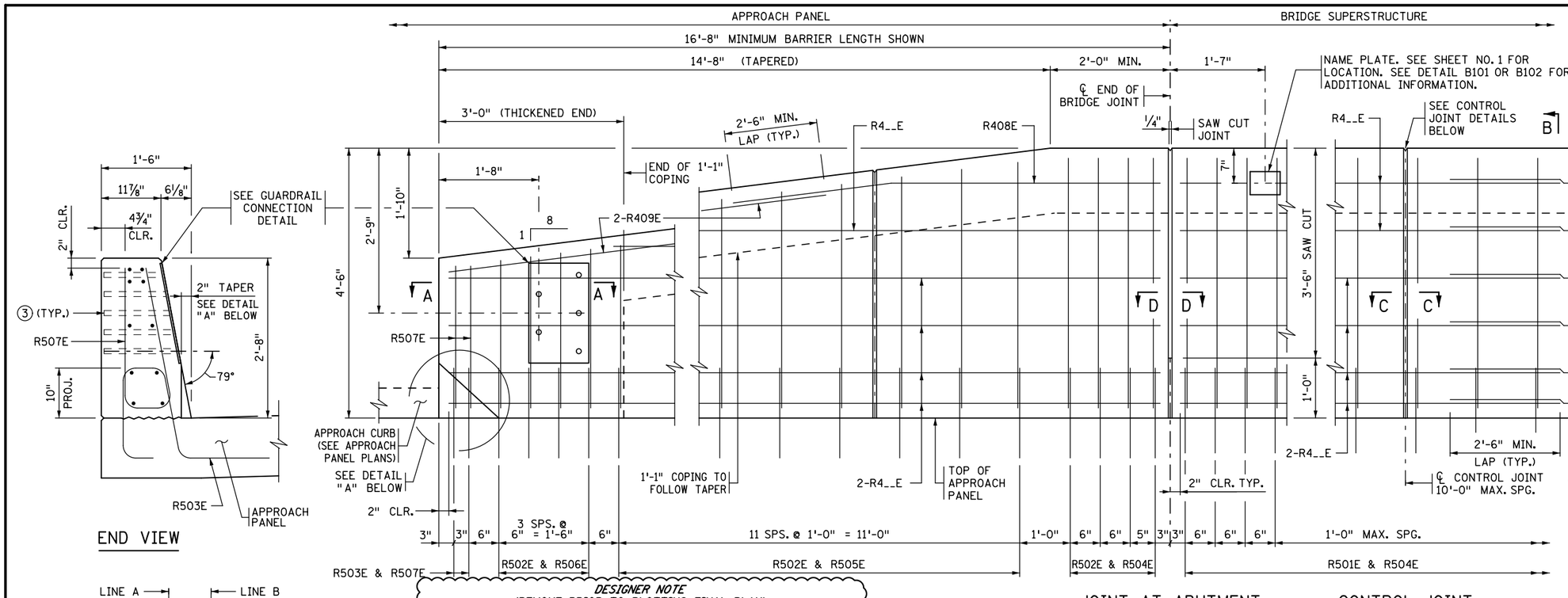

JOINT AT ABUTMENT

(INTEGRAL OR SEMI-INTEGRAL ABUTMENT)

CONTROL JOINT

INSIDE ELEVATION OF BARRIER

END VIEW

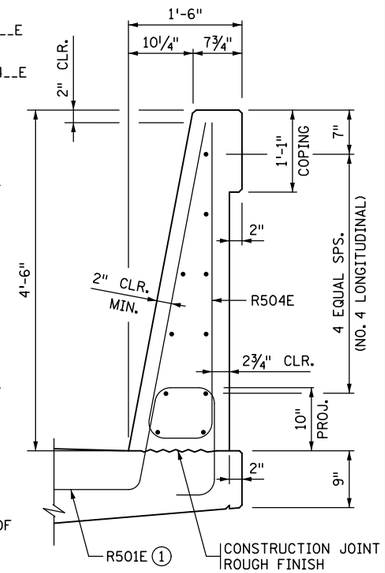

SECTION B-B

BARRIER MEETS NCHRP 350 TL-4 REQUIREMENTS ON BRIDGE DECK AND TL-3 ON APPROACH PANEL.

BILL OF REINFORCEMENT FOR BARRIER

BAR	NO.	LENGTH	SHAPE	LOCATION
R501E		5'-7"		BARRIER DOWEL
R502E		5'-9"		BARRIER DOWEL
R503E		5'-8"		BARRIER DOWEL
R504E		9'-2"		BARRIER VERTICAL
R505E	-- SER. OF 12	6'-3" TO 9'-1"		BARRIER VERTICAL
R506E	-- SER. OF 4	5'-9" TO 6'-1"		BARRIER VERTICAL
R507E		5'-6"		BARRIER VERTICAL
R408E		11'-8"		BARRIER LONGIT.
R409E		7'-7"		BARRIER LONGIT.
R4__E				BARRIER LONGIT.
R4__E				BARRIER LONGIT.
R4__E				BARRIER LONGIT.
R4__E				BARRIER LONGIT.
R4__E				BARRIER LONGIT.

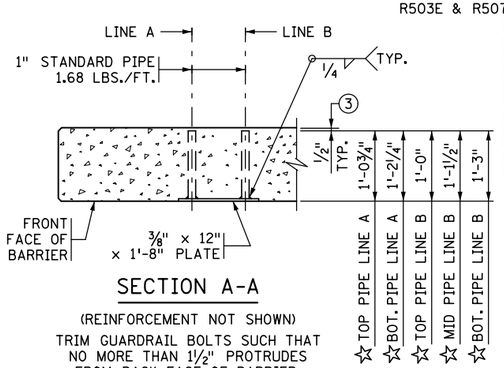

SECTION A-A

(REINFORCEMENT NOT SHOWN)

TRIM GUARDRAIL BOLTS SUCH THAT NO MORE THAN 1 1/2" PROTRUDES FROM BACK FACE OF BARRIER.

☆ DIMENSIONS INCLUDE 3/8" PLATE

DESIGNER NOTE
(REMOVE PRIOR TO PLOTTING FINAL PLAN):

MINIMUM BARRIER LENGTH ON APPROACH PANEL IS 16'-8" WITH MINIMUM OF 22 R502E AND R503E DOWELS WITH ACCOMPANYING APPROPRIATE BARRIER VERTICAL BARS, 12" MAX. SPACING.
VERIFY APPROACH BARRIER LENGTH, NEED FOR A GUARDRAIL CONNECTION, AND VERTICAL TAPER WITH ROADWAY DESIGNER.
REFER TO MEMO TO DESIGNERS (2016-01) FOR ADDITIONAL REQUIREMENTS REGARDING BARRIER PLACEMENT.

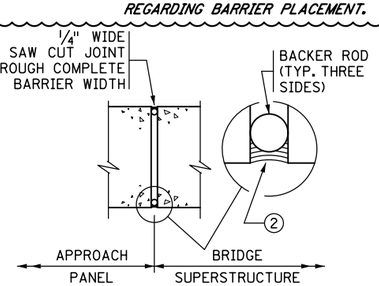

SECTION D-D

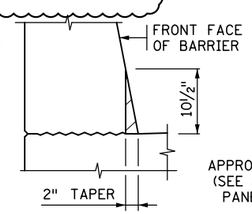

VIEW F-F

AT BARRIER END

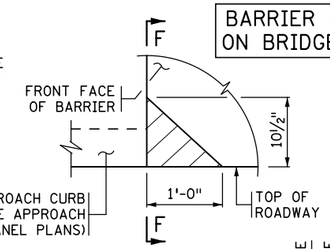

DETAIL "A"

ELEVATION VIEW

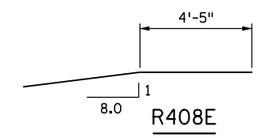

R408E

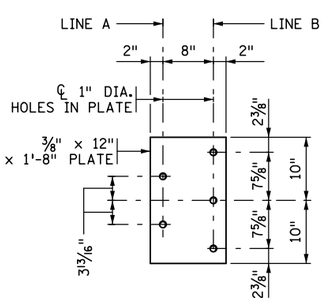

GUARDRAIL CONNECTION DETAIL

GALVANIZE AFTER FABRICATION PER SPEC. 3394
ESTIMATED WEIGHT = 35 LBS.

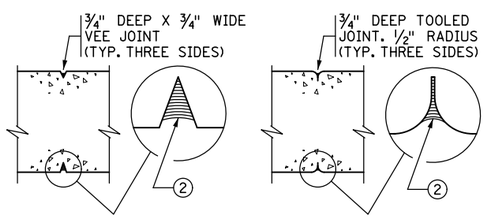

SECTION C-C

CONTRACTOR OPTION 1

SECTION C-C

CONTRACTOR OPTION 2

CONTROL JOINT DETAILS

WHEN USING SLIP FORM METHOD TO PLACE THE CONCRETE, CUT JOINT 3 INCHES DEEP USING MARGIN TROWEL OR SIMILAR MEANS IMMEDIATELY AFTER CONCRETE PLACEMENT (TYP. THREE SIDES).

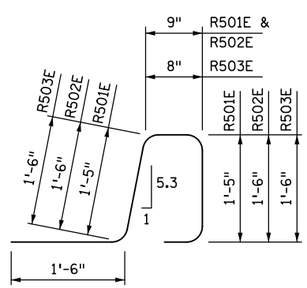

R501E, R502E, R503E

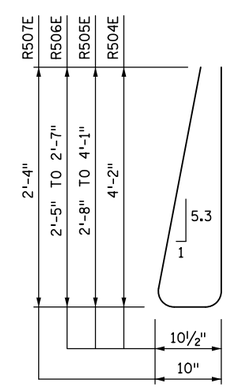

R504E, R505E, R506E, R507E

GENERAL NOTES

MEASURE PAYMENT LENGTH BETWEEN THE OUTSIDE ENDS OF THE BARRIER.

CONCRETE BARRIER = 639 LBS./FT. (0.158 CU. YDS./FT.)

FINISH ALL EDGES OF BARRIER WITH 1/2" CHAMFER, EXCEPT WHERE OTHERWISE NOTED.

SPACE CONTROL JOINTS AT 10 FT. MAXIMUM. REFER TO SUPERSTRUCTURE SHEET FOR SPECIFIC SPACING INFORMATION.

GUARDRAIL CONNECTION TO BE STRUCTURAL STEEL, SPEC. 3306.

GUARDRAIL CONNECTION AND NAME PLATE TO BE CONSIDERED INCIDENTAL TO BARRIER.

BARRIER QUANTITIES ARE LISTED IN SUMMARY OF QUANTITIES FOR SUPERSTRUCTURE.

1 PLACE BAR ON TOP OF BOTTOM REINFORCEMENT MAT IN DECK.

2 JOINT SEALANT PER MnDOT APPROVED/QUALIFIED PRODUCTS LIST - CRACK AND JOINT MATERIALS - SILICONE JOINT SEALERS.

3 REMOVE CONCRETE FROM PIPE ENDS AFTER SLIPFORMING OR FORM REMOVAL.

REVISION:

APPROVED: AUGUST 24, 2016
Kevin Western
STATE BRIDGE ENGINEER

CERTIFIED BY
LICENSED PROFESSIONAL ENGINEER DATE
NAME: LIC. NO.

TITLE: SINGLE SLOPE CONCRETE BARRIER 54" (TYPE S, TL-4)
INTEGRAL OR SEMI-INTEGRAL ABUTMENT WITH GUARDRAIL CONNECTION (WITHOUT CONCRETE WEARING COURSE)

DES: DR:
CHK: CHK:
SHEET NO. OF SHEETS

FIG. 5-397.142(A)

APPROVED:

BRIDGE NO.

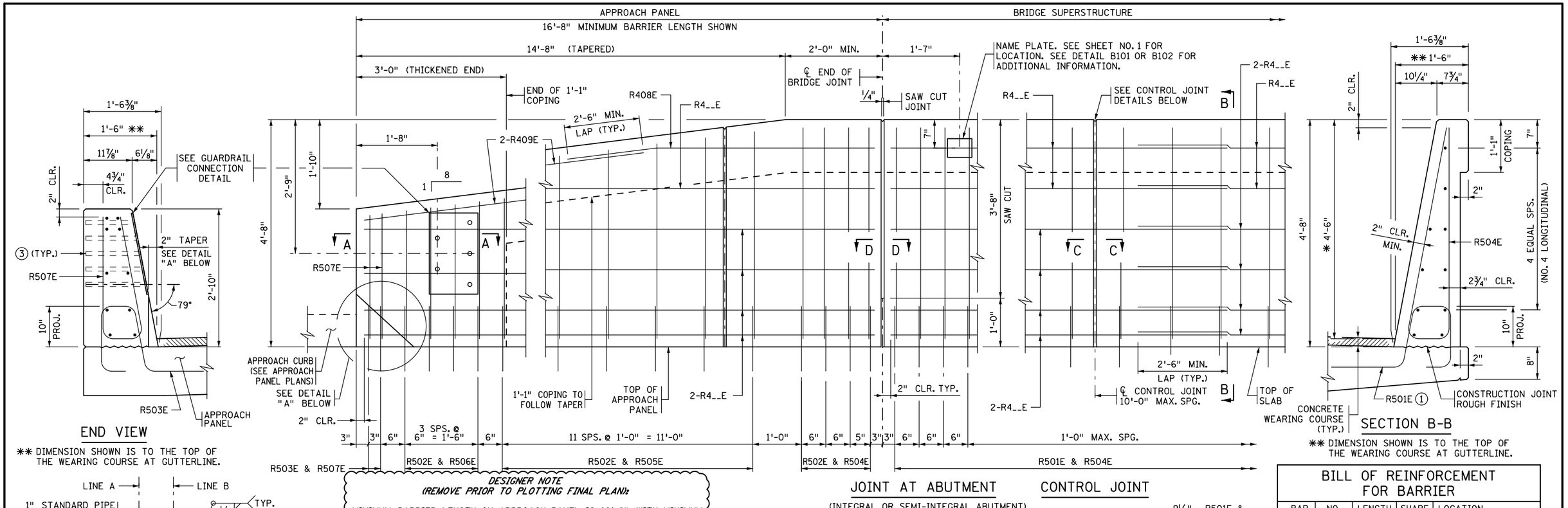

END VIEW

✱✱ DIMENSION SHOWN IS TO THE TOP OF THE WEARING COURSE AT GUTTERLINE.

SECTION B-B

✱✱ DIMENSION SHOWN IS TO THE TOP OF THE WEARING COURSE AT GUTTERLINE.

JOINT AT ABUTMENT

(INTEGRAL OR SEMI-INTEGRAL ABUTMENT)

CONTROL JOINT

INSIDE ELEVATION OF BARRIER

CONCRETE WEARING COURSE NOT SHOWN

BARRIER MEETS NCHRP 350 TL-4 REQUIREMENTS ON BRIDGE DECK AND TL-3 ON APPROACH PANEL.

DESIGNER NOTE
(REMOVE PRIOR TO PLOTTING FINAL PLAN):

MINIMUM BARRIER LENGTH ON APPROACH PANEL IS 16'-8" WITH MINIMUM OF 22 R502E AND R503E DOWELS WITH ACCOMPANYING APPROPRIATE BARRIER VERTICAL BARS, 12" MAX. SPACING.
VERIFY APPROACH BARRIER LENGTH, NEED FOR A GUARDRAIL CONNECTION, AND VERTICAL TAPER WITH ROADWAY DESIGNER.
REFER TO MEMO TO DESIGNERS (2016-01) FOR ADDITIONAL REQUIREMENTS REGARDING BARRIER PLACEMENT.

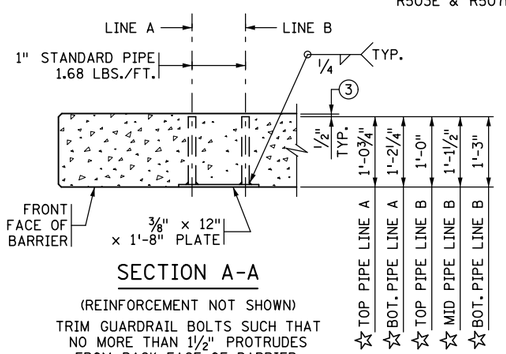

SECTION A-A

(REINFORCEMENT NOT SHOWN)

TRIM GUARDRAIL BOLTS SUCH THAT NO MORE THAN 1 1/2" PROTRUDES FROM BACK FACE OF BARRIER.

☆ DIMENSIONS INCLUDE 3/8" PLATE

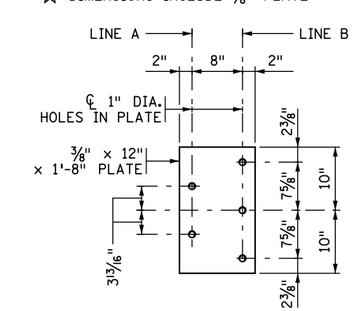

GUARDRAIL CONNECTION DETAIL

GALVANIZE AFTER FABRICATION PER SPEC. 3394
ESTIMATED WEIGHT = 35 LBS.

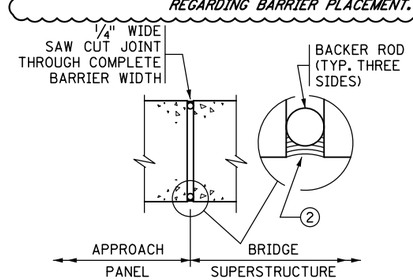

SECTION D-D

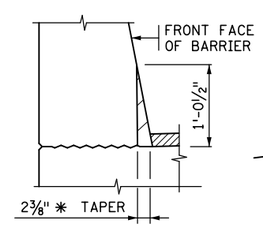

VIEW F-F

AT BARRIER END

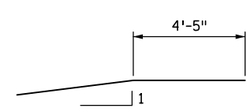

R408E

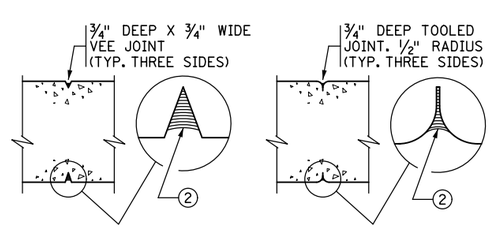

SECTION C-C

CONTRACTOR OPTION 1

SECTION C-C

CONTRACTOR OPTION 2

CONTROL JOINT DETAILS

WHEN USING SLIP FORM METHOD TO PLACE THE CONCRETE, CUT JOINT 3 INCHES DEEP USING MARGIN TROWEL OR SIMILAR MEANS IMMEDIATELY AFTER CONCRETE PLACEMENT (TYP. THREE SIDES).

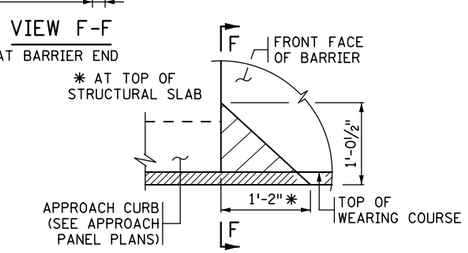

DETAIL "A"

ELEVATION VIEW
(WEARING COURSE SHOWN)

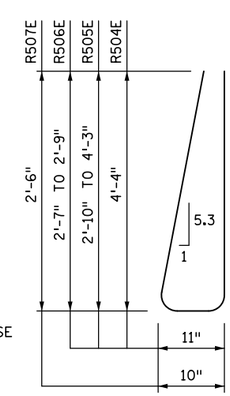

R504E, R505E, R506E, R507E

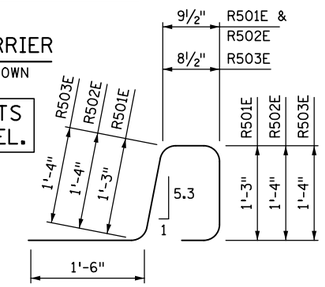

R501E, R502E & R503E

BILL OF REINFORCEMENT FOR BARRIER

BAR	NO.	LENGTH	SHAPE	LOCATION
R501E		5'-4"		BARRIER DOWEL
R502E		5'-6"		BARRIER DOWEL
R503E		5'-5"		BARRIER DOWEL
R504E		9'-6"		BARRIER VERTICAL
R505E	-- SER. OF 12	6'-7" TO 9'-5"		BARRIER VERTICAL
R506E	-- SER. OF 4	6'-1" TO 6'-5"		BARRIER VERTICAL
R507E		5'-6"		BARRIER VERTICAL
R408E		11'-8"		BARRIER LONGIT.
R409E		7'-7"		BARRIER LONGIT.
R4__E				BARRIER LONGIT.
R4__E				BARRIER LONGIT.
R4__E				BARRIER LONGIT.
R4__E				BARRIER LONGIT.
R4__E				BARRIER LONGIT.

GENERAL NOTES

MEASURE PAYMENT LENGTH BETWEEN THE OUTSIDE ENDS OF THE BARRIER.

CONCRETE BARRIER = 673 LBS./FT. (0.166 CU. YDS./FT.)

FINISH ALL EDGES OF BARRIER WITH 1/2" CHAMFER, EXCEPT WHERE OTHERWISE NOTED.

SPACE CONTROL JOINTS AT 10 FT. MAXIMUM. REFER TO SUPERSTRUCTURE SHEET FOR SPECIFIC SPACING INFORMATION.

GUARDRAIL CONNECTION TO BE STRUCTURAL STEEL, SPEC. 3306.

GUARDRAIL CONNECTION AND NAME PLATE TO BE CONSIDERED INCIDENTAL TO BARRIER.

BARRIER QUANTITIES ARE LISTED IN SUMMARY OF QUANTITIES FOR SUPERSTRUCTURE.

① PLACE BAR ON TOP OF BOTTOM REINFORCEMENT MAT IN DECK.

② JOINT SEALANT PER MnDOT APPROVED/QUALIFIED PRODUCTS LIST - CRACK AND JOINT MATERIALS - SILICONE JOINT SEALERS.

③ REMOVE CONCRETE FROM PIPE ENDS AFTER SLIPFORMING OR FORM REMOVAL.

REVISION:

APPROVED: AUGUST 24, 2016
Kevin Western
STATE BRIDGE ENGINEER

CERTIFIED BY _____ LICENSED PROFESSIONAL ENGINEER _____ DATE
NAME: LIC. NO.

TITLE: SINGLE SLOPE CONCRETE BARRIER 54" (TYPE S, TL-4)
INTEGRAL OR SEMI-INTEGRAL ABUTMENT WITH GUARDRAIL CONNECTION (WITH 2" CONCRETE WEARING COURSE)

DES: DR: CHK: CHK:
SHEET NO. OF SHEETS

APPROVED:

FIG. 5-397.142(B)

BRIDGE NO.

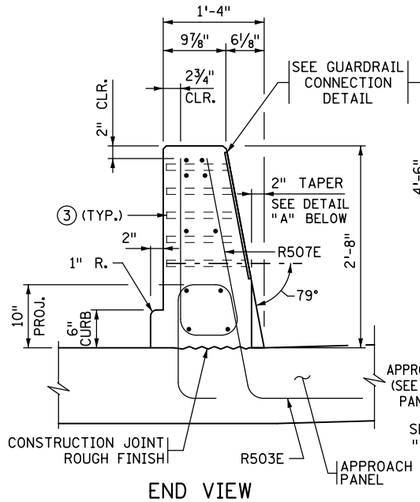

END VIEW

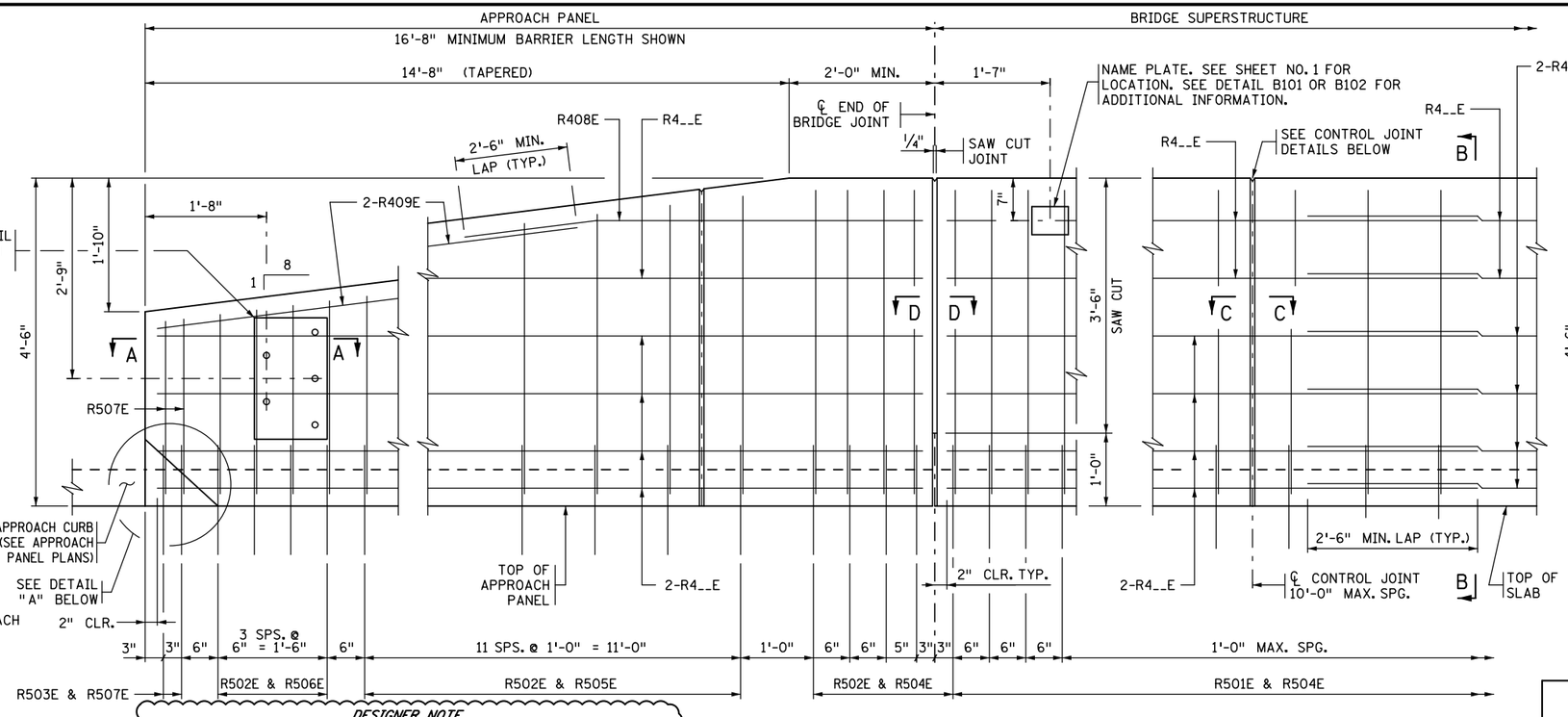

JOINT AT ABUTMENT

(INTEGRAL OR SEMI-INTEGRAL ABUTMENT)

CONTROL JOINT

INSIDE ELEVATION OF BARRIER

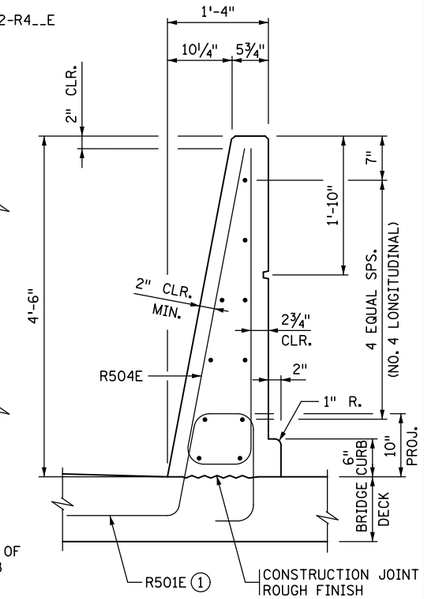

SECTION B-B

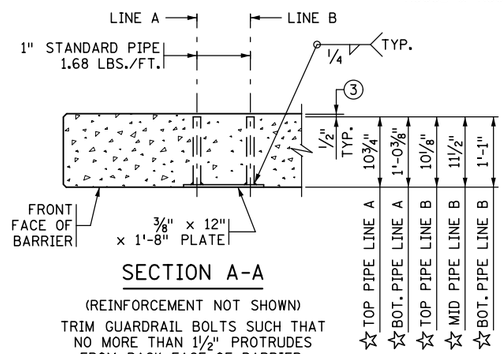

SECTION A-A

(REINFORCEMENT NOT SHOWN)

TRIM GUARDRAIL BOLTS SUCH THAT NO MORE THAN 1½" PROTRUDES FROM BACK FACE OF BARRIER.

☆ DIMENSIONS INCLUDE ⅜" PLATE

DESIGNER NOTE
(REMOVE PRIOR TO PLOTTING FINAL PLAN):

MINIMUM BARRIER LENGTH ON APPROACH PANEL IS 16'-8" WITH MINIMUM OF 22 R502E AND R503E DOWELS WITH ACCOMPANYING APPROPRIATE BARRIER VERTICAL BARS, 12" MAX. SPACING.
VERIFY APPROACH BARRIER LENGTH, NEED FOR A GUARDRAIL CONNECTION, AND VERTICAL TAPER WITH ROADWAY DESIGNER.
REFER TO MEMO TO DESIGNERS (2016-01) FOR ADDITIONAL REQUIREMENTS REGARDING BARRIER PLACEMENT.

BARRIER MEETS NCHRP 350 TL-4 REQUIREMENTS ON BRIDGE DECK AND TL-3 ON APPROACH PANEL.

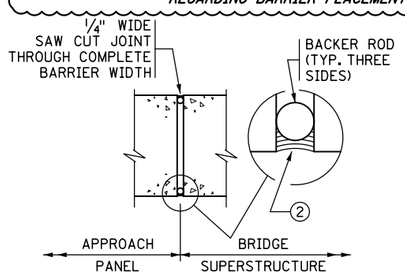

SECTION D-D

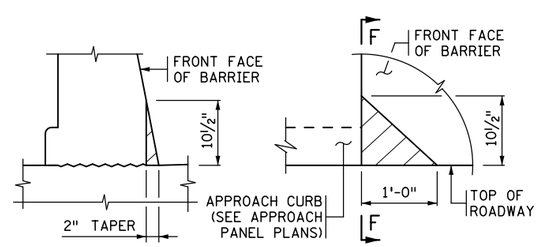

VIEW F-F

AT BARRIER END

DETAIL "A"

ELEVATION VIEW

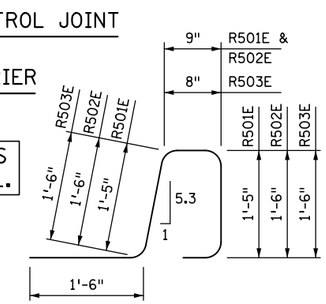

R501E, R502E, R503E

BILL OF REINFORCEMENT FOR BARRIER				
BAR	NO.	LENGTH	SHAPE	LOCATION
R501E		5'-7"		BARRIER DOWEL
R502E		5'-9"		BARRIER DOWEL
R503E		5'-8"		BARRIER DOWEL
R504E		9'-2"		BARRIER VERTICAL
R505E	-- SER. OF 12	6'-3" TO 9'-1"		BARRIER VERTICAL
R506E	-- SER. OF 4	5'-9" TO 6'-1"		BARRIER VERTICAL
R507E		5'-6"		BARRIER VERTICAL
R408E		11'-8"		BARRIER LONGIT.
R409E		7'-7"		BARRIER LONGIT.
R4__E				BARRIER LONGIT.
R4__E				BARRIER LONGIT.
R4__E				BARRIER LONGIT.
R4__E				BARRIER LONGIT.
R4__E				BARRIER LONGIT.

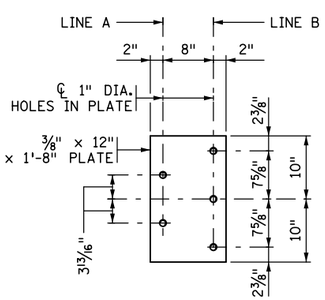

GUARDRAIL CONNECTION DETAIL

GALVANIZE AFTER FABRICATION PER SPEC. 3394
ESTIMATED WEIGHT = 34 LBS.

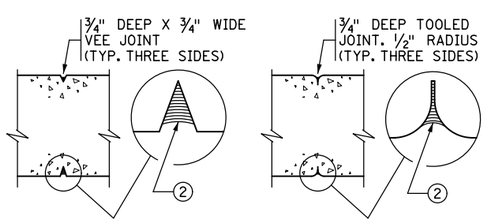

SECTION C-C

CONTRACTOR OPTION 1

SECTION C-C

CONTRACTOR OPTION 2

CONTROL JOINT DETAILS

WHEN USING SLIP FORM METHOD TO PLACE THE CONCRETE, CUT JOINT 3 INCHES DEEP USING MARGIN TROWEL OR SIMILAR MEANS IMMEDIATELY AFTER CONCRETE PLACEMENT (TYP. THREE SIDES).

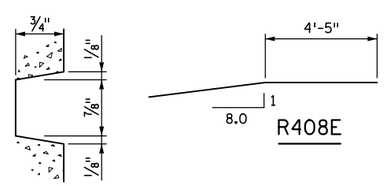

BARRIER RUSTICATION

R408E

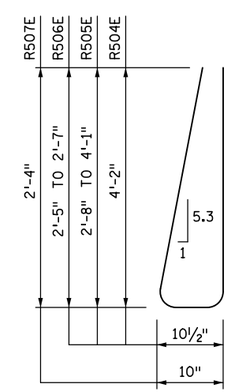

R504E, R505E, R506E, R507E

GENERAL NOTES

MEASURE PAYMENT LENGTH BETWEEN THE OUTSIDE ENDS OF THE BARRIER.

CONCRETE BARRIER = 624 LBS./FT. (0.154 CU. YDS./FT.)

FINISH ALL EDGES OF BARRIER WITH ½" CHAMFER, EXCEPT WHERE OTHERWISE NOTED.

SPACE CONTROL JOINTS AT 10 FT. MAXIMUM. REFER TO SUPERSTRUCTURE SHEET FOR SPECIFIC SPACING INFORMATION.

GUARDRAIL CONNECTION TO BE STRUCTURAL STEEL, SPEC. 3306.

GUARDRAIL CONNECTION AND NAME PLATE TO BE CONSIDERED INCIDENTAL TO BARRIER.

BARRIER QUANTITIES ARE LISTED IN SUMMARY OF QUANTITIES FOR SUPERSTRUCTURE.

① PLACE BAR ON TOP OF BOTTOM REINFORCEMENT MAT IN DECK.

② JOINT SEALANT PER MnDOT APPROVED/QUALIFIED PRODUCTS LIST - CRACK AND JOINT MATERIALS - SILICONE JOINT SEALERS.

③ REMOVE CONCRETE FROM PIPE ENDS AFTER SLIPFORMING OR FORM REMOVAL.

REVISION:

APPROVED: AUGUST 24, 2016
Kevin Western
STATE BRIDGE ENGINEER

CERTIFIED BY _____ LICENSED PROFESSIONAL ENGINEER _____ DATE

NAME: LIC. NO.

TITLE: SINGLE SLOPE CONCRETE BARRIER 54" (TYPE S, TL-4)
INTEGRAL OR SEMI-INTEGRAL ABUTMENT WITH BRIDGE SLAB SIDEWALK AND GUARDRAIL CONNECTION (WITHOUT CONCRETE WEARING COURSE)

DES: DR: CHK: CHK:

SHEET NO. OF SHEETS

FIG. 5-397.142(C)

APPROVED:

BRIDGE NO.

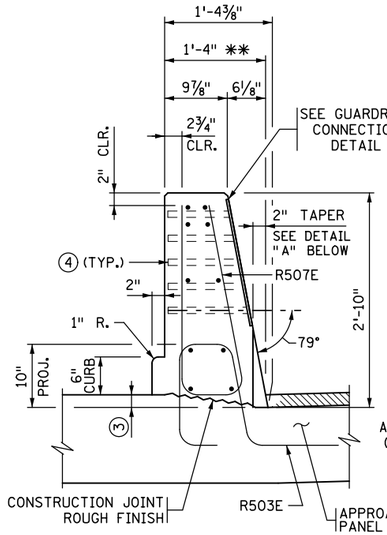

END VIEW

** DIMENSION SHOWN IS TO THE TOP OF THE WEARING COURSE AT GUTTERLINE.

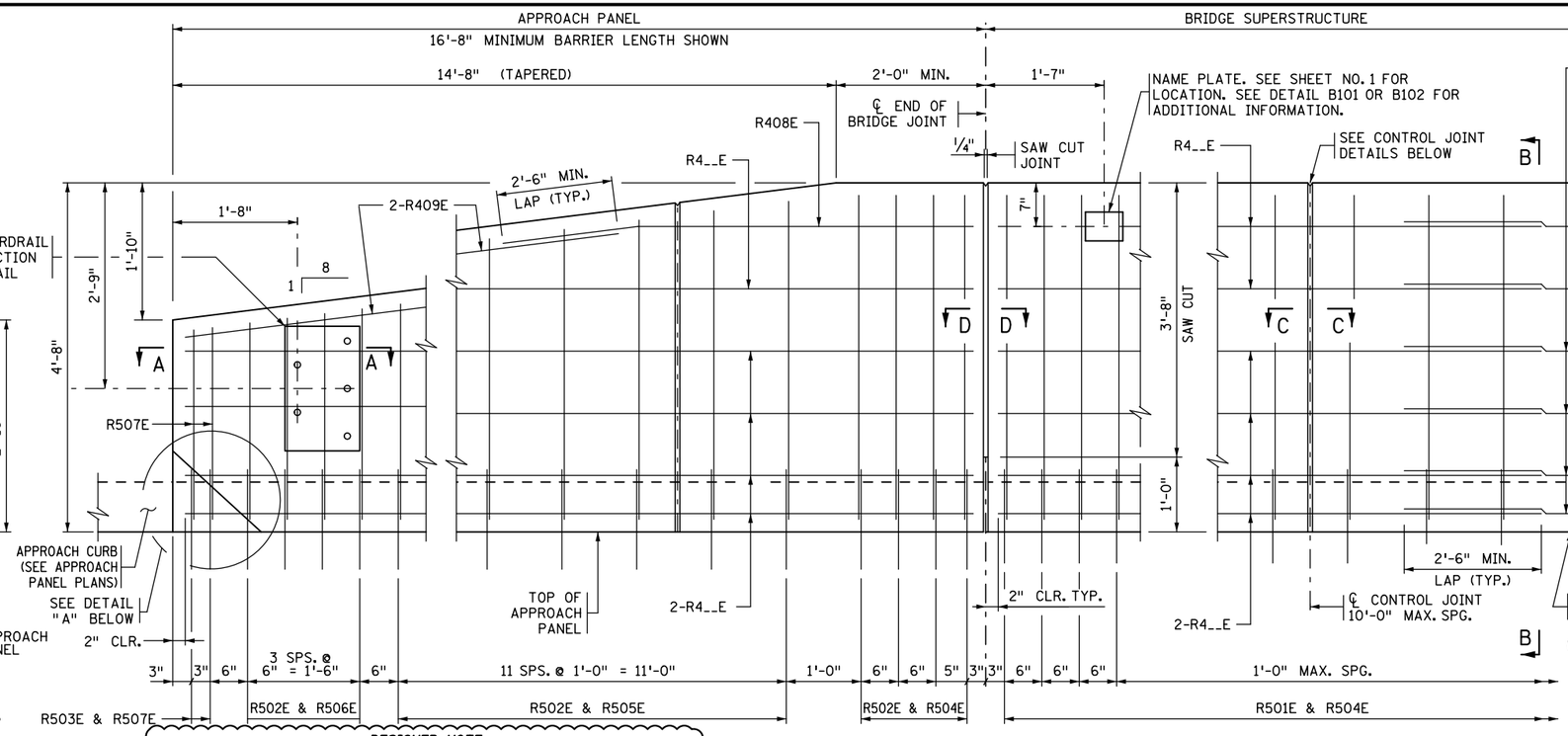

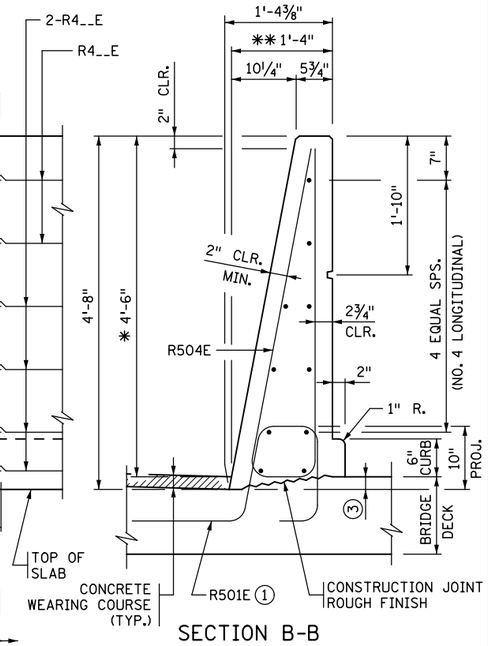

SECTION B-B

** DIMENSION SHOWN IS TO THE TOP OF THE WEARING COURSE AT GUTTERLINE.

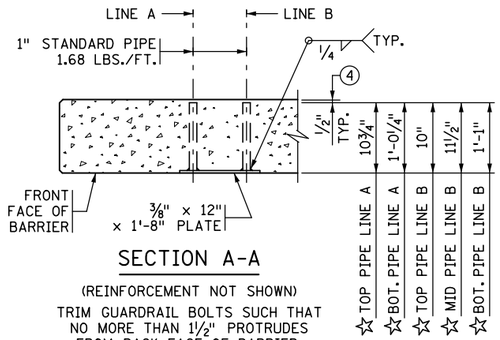

SECTION A-A

(REINFORCEMENT NOT SHOWN)

TRIM GUARDRAIL BOLTS SUCH THAT NO MORE THAN 1 1/2" PROTRUDES FROM BACK FACE OF BARRIER.

☆ DIMENSIONS INCLUDE 3/8" PLATE

DESIGNER NOTE
(REMOVE PRIOR TO PLOTTING FINAL PLAN):

MINIMUM BARRIER LENGTH ON APPROACH PANEL IS 16'-8" WITH MINIMUM OF 22 R502E AND R503E DOWELS WITH ACCOMPANYING APPROPRIATE BARRIER VERTICAL BARS, 12" MAX. SPACING.
VERIFY APPROACH BARRIER LENGTH, NEED FOR A GUARDRAIL CONNECTION, AND VERTICAL TAPER WITH ROADWAY DESIGNER.
REFER TO MEMO TO DESIGNERS (2016-01) FOR ADDITIONAL REQUIREMENTS REGARDING BARRIER PLACEMENT.

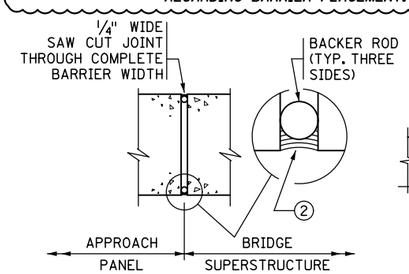

SECTION D-D

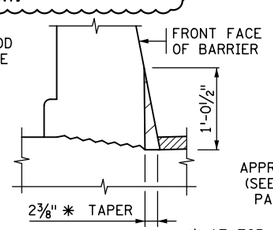

VIEW F-F

AT BARRIER END

* AT TOP OF STRUCTURAL SLAB

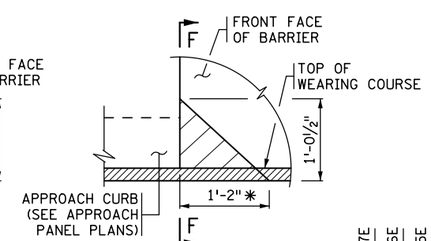

DETAIL "A"

ELEVATION VIEW
(WEARING COURSE SHOWN)

JOINT AT ABUTMENT

(INTEGRAL OR SEMI-INTEGRAL ABUTMENT)

CONTROL JOINT

INSIDE ELEVATION OF BARRIER

CONCRETE WEARING COURSE NOT SHOWN

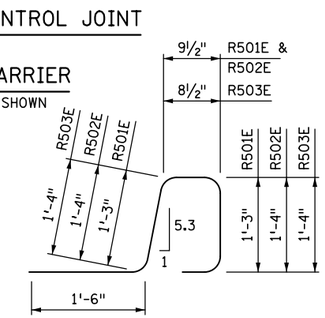

R501E, R502E & R503E

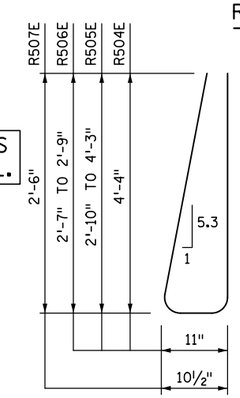

R504E, R505E, R506E, R507E

BILL OF REINFORCEMENT FOR BARRIER

BAR	NO.	LENGTH	SHAPE	LOCATION
R501E		5'-4"		BARRIER DOWEL
R502E		5'-6"		BARRIER DOWEL
R503E		5'-5"		BARRIER DOWEL
R504E		9'-6"		BARRIER DOWEL
R505E	-- SER. OF 12	6'-7" TO 9'-5"		BARRIER VERTICAL
R506E	-- SER. OF 4	6'-1" TO 6'-5"		BARRIER VERTICAL
R507E		5'-6"		BARRIER DOWEL
R408E		11'-8"		BARRIER LONGIT.
R409E		7'-7"		BARRIER LONGIT.
R4__E				BARRIER LONGIT.
R4__E				BARRIER LONGIT.
R4__E				BARRIER LONGIT.
R4__E				BARRIER LONGIT.

GENERAL NOTES

MEASURE PAYMENT LENGTH BETWEEN THE OUTSIDE ENDS OF THE BARRIER.

CONCRETE BARRIER = 643 LBS./FT. (0.159 CU. YDS./FT.)

FINISH ALL EDGES OF BARRIER WITH 1/2" CHAMFER, EXCEPT WHERE OTHERWISE NOTED.

SPACE CONTROL JOINTS AT 10 FT. MAXIMUM. REFER TO SUPERSTRUCTURE SHEET FOR SPECIFIC SPACING INFORMATION.

GUARDRAIL CONNECTION TO BE STRUCTURAL STEEL, SPEC. 3306.

GUARDRAIL CONNECTION AND NAME PLATE TO BE CONSIDERED INCIDENTAL TO BARRIER.

BARRIER QUANTITIES ARE LISTED IN SUMMARY OF QUANTITIES FOR SUPERSTRUCTURE.

① PLACE BAR ON TOP OF BOTTOM REINFORCEMENT MAT IN DECK.

② JOINT SEALANT PER MnDOT APPROVED/QUALIFIED PRODUCTS LIST - CRACK AND JOINT MATERIALS - SILICONE JOINT SEALERS.

③ DIMENSIONS TO BE DETERMINED BASED ON THE BRIDGE DECK SLOPE.

④ REMOVE CONCRETE FROM PIPE ENDS AFTER SLIPFORMING OR FORM REMOVAL.

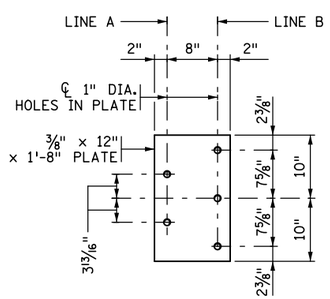

GUARDRAIL CONNECTION DETAIL

GALVANIZE AFTER FABRICATION PER SPEC. 3394
ESTIMATED WEIGHT = 34 LBS.

BARRIER MEETS NCHRP 350 TL-4 REQUIREMENTS ON BRIDGE DECK AND TL-3 ON APPROACH PANEL.

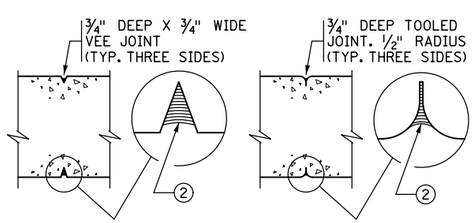

SECTION C-C

CONTRACTOR OPTION 1

SECTION C-C

CONTRACTOR OPTION 2

CONTROL JOINT DETAILS

WHEN USING SLIP FORM METHOD TO PLACE THE CONCRETE, CUT JOINT 3 INCHES DEEP USING MARGIN TROWEL OR SIMILAR MEANS IMMEDIATELY AFTER CONCRETE PLACEMENT (TYP. THREE SIDES).

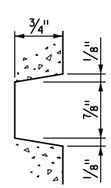

BARRIER RUSTICATION

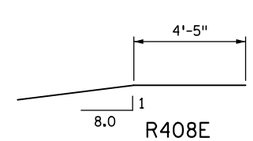

R408E

REVISION:

APPROVED: AUGUST 24, 2016
STATE BRIDGE ENGINEER

CERTIFIED BY
LICENSED PROFESSIONAL ENGINEER DATE
NAME: LIC. NO.

TITLE: SINGLE SLOPE CONCRETE BARRIER 54" (TYPE S, TL-4)
INTEGRAL OR SEMI-INTEGRAL ABUTMENT WITH BRIDGE SLAB SIDEWALK AND GUARDRAIL CONNECTION (WITH 2" CONCRETE WEARING COURSE)

DES: DR: CHK: CHK:
SHEET NO. OF SHEETS

APPROVED:

FIG. 5-397.142(D)

BRIDGE NO.

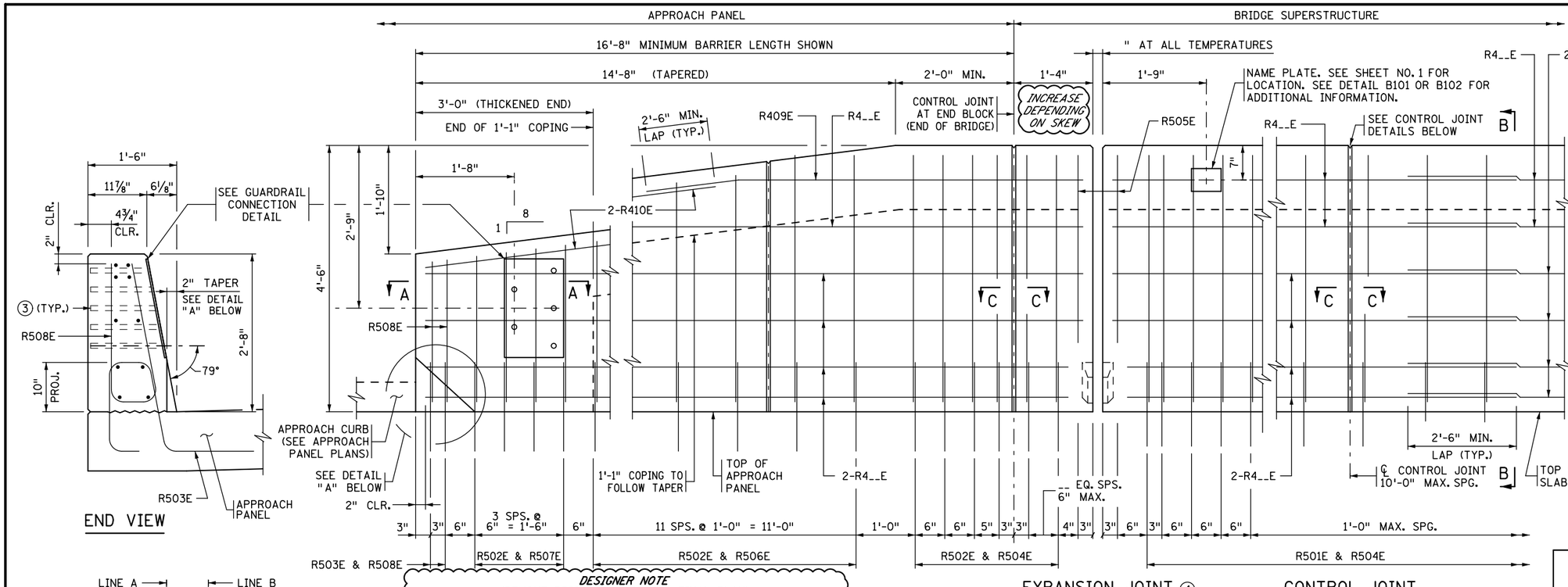

END VIEW

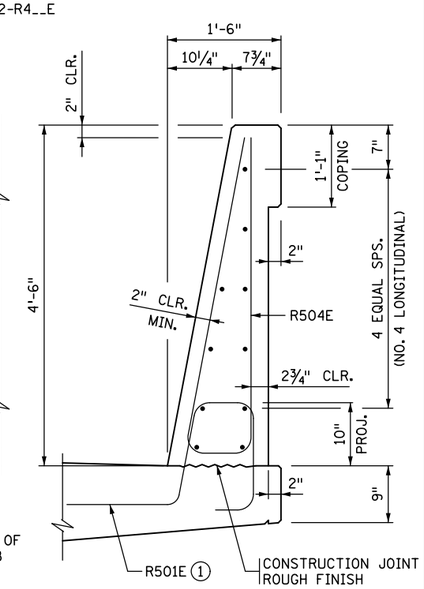

SECTION B-B

DESIGNER NOTE
(REMOVE PRIOR TO PLOTTING FINAL PLAN):

MINIMUM BARRIER LENGTH ON APPROACH PANEL IS 16'-8" WITH MINIMUM OF 22 R502E AND R503E DOWELS WITH ACCOMPANYING APPROPRIATE BARRIER VERTICAL BARS, 12" MAX. SPACING.
VERIFY APPROACH BARRIER LENGTH, NEED FOR A GUARDRAIL CONNECTION, AND VERTICAL TAPER WITH ROADWAY DESIGNER.
REFER TO MEMO TO DESIGNERS (2016-01) FOR ADDITIONAL REQUIREMENTS REGARDING BARRIER PLACEMENT.

EXPANSION JOINT ④

EXPANSION DEVICE NOT SHOWN

CONTROL JOINT

INSIDE ELEVATION OF BARRIER

BARRIER MEETS NCHRP 350 TL-4 REQUIREMENTS ON BRIDGE DECK AND TL-3 ON APPROACH PANEL.

BILL OF REINFORCEMENT FOR BARRIER

BAR	NO.	LENGTH	SHAPE	LOCATION
R501E		5'-7"		BARRIER DOWEL
R502E		5'-9"		BARRIER DOWEL
R503E		5'-8"		BARRIER DOWEL
R504E		9'-2"		BARRIER VERTICAL
R505E		7'-0"		BARRIER VERTICAL
R506E	-- SER. OF 12	6'-3" TO 9'-1"		BARRIER VERTICAL
R507E	-- SER. OF 4	5'-9" TO 6'-1"		BARRIER VERTICAL
R508E		5'-6"		BARRIER VERTICAL
R409E		13'-0"		BARRIER LONGIT.
R410E		7'-7"		BARRIER LONGIT.
R4__E				BARRIER LONGIT.
R4__E				BARRIER LONGIT.
R4__E				BARRIER LONGIT.
R4__E				BARRIER LONGIT.

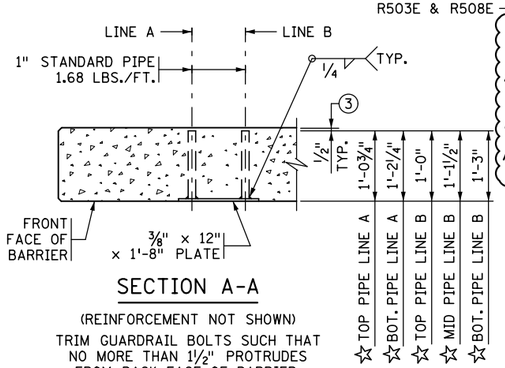

SECTION A-A

(REINFORCEMENT NOT SHOWN)

TRIM GUARDRAIL BOLTS SUCH THAT NO MORE THAN 1½" PROTRUDES FROM BACK FACE OF BARRIER.

☆ DIMENSIONS INCLUDE ⅜" PLATE

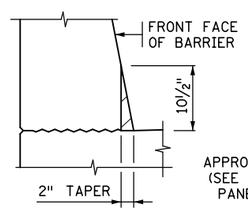

VIEW F-F

AT BARRIER END

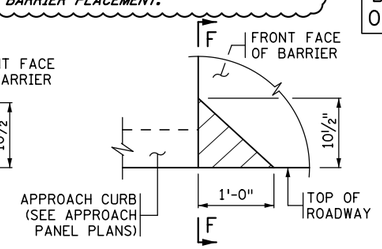

DETAIL "A"

ELEVATION VIEW

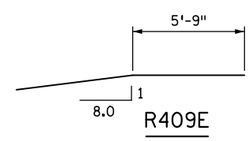

R409E

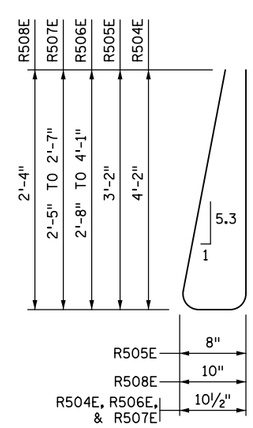

R504E, R505E, R506E, R507E & R508E

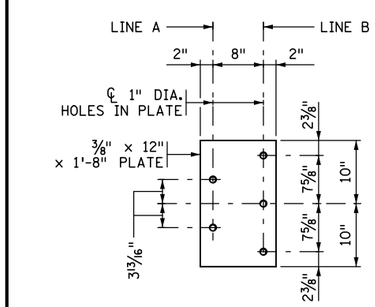

GUARDRAIL CONNECTION DETAIL

GALVANIZE AFTER FABRICATION PER SPEC. 3394
ESTIMATED WEIGHT = 35 LBS.

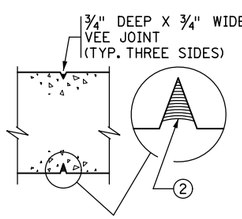

SECTION C-C

CONTRACTOR OPTION 1

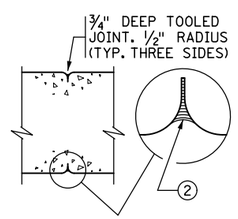

SECTION C-C

CONTRACTOR OPTION 2

CONTROL JOINT DETAILS

WHEN USING SLIP FORM METHOD TO PLACE THE CONCRETE, CUT JOINT 3 INCHES DEEP USING MARGIN TROWEL OR SIMILAR MEANS IMMEDIATELY AFTER CONCRETE PLACEMENT (TYP. THREE SIDES).

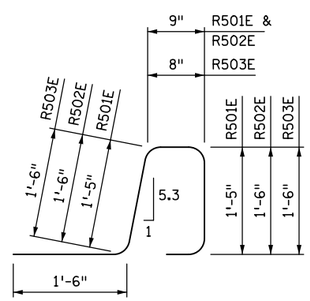

R501E, R502E, R503E

GENERAL NOTES

MEASURE PAYMENT LENGTH BETWEEN THE OUTSIDE ENDS OF THE BARRIER.

CONCRETE BARRIER = 639 LBS./FT. (0.158 CU. YDS./FT.)

FINISH ALL EDGES OF BARRIER WITH ½" CHAMFER, EXCEPT WHERE OTHERWISE NOTED.

SPACE CONTROL JOINTS AT 10 FT. MAXIMUM. REFER TO SUPERSTRUCTURE SHEET FOR SPECIFIC SPACING INFORMATION.

GUARDRAIL CONNECTION TO BE STRUCTURAL STEEL, SPEC. 3306.

GUARDRAIL CONNECTION AND NAME PLATE TO BE CONSIDERED INCIDENTAL TO BARRIER.

BARRIER QUANTITIES ARE LISTED IN SUMMARY OF QUANTITIES FOR SUPERSTRUCTURE.

① PLACE BAR ON TOP OF BOTTOM REINFORCEMENT MAT IN DECK.

② JOINT SEALANT PER MnDOT APPROVED/QUALIFIED PRODUCTS LIST - CRACK AND JOINT MATERIALS - SILICONE JOINT SEALERS.

③ REMOVE CONCRETE FROM PIPE ENDS AFTER SLIPFORMING OR FORM REMOVAL.

④ REFER TO "WATERPROOF EXPANSION DEVICE" STANDARD PLANS FOR COVER PLATE DETAILS.

FIG. 5-397.143(A)

REVISION:

APPROVED: AUGUST 24, 2016
Kevin Western
STATE BRIDGE ENGINEER

CERTIFIED BY _____ LICENSED PROFESSIONAL ENGINEER _____ DATE
NAME: LIC. NO.

TITLE: SINGLE SLOPE CONCRETE BARRIER 54" (TYPE S, TL-4)
PARAPET ABUTMENT WITH GUARDRAIL CONNECTION (WITHOUT CONCRETE WEARING COURSE)

DES: DR: CHK: CHK:

SHEET NO. OF SHEETS

APPROVED:

BRIDGE NO.

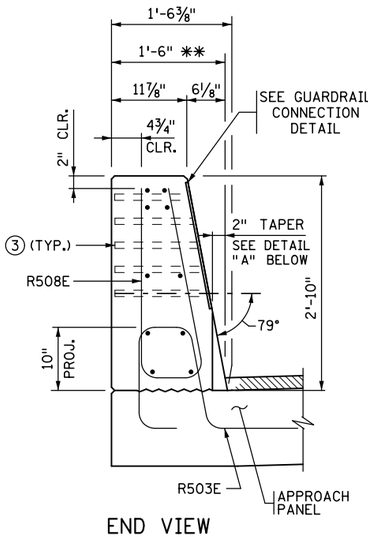

END VIEW

** DIMENSION SHOWN IS TO THE TOP OF THE WEARING COURSE AT GUTTERLINE.

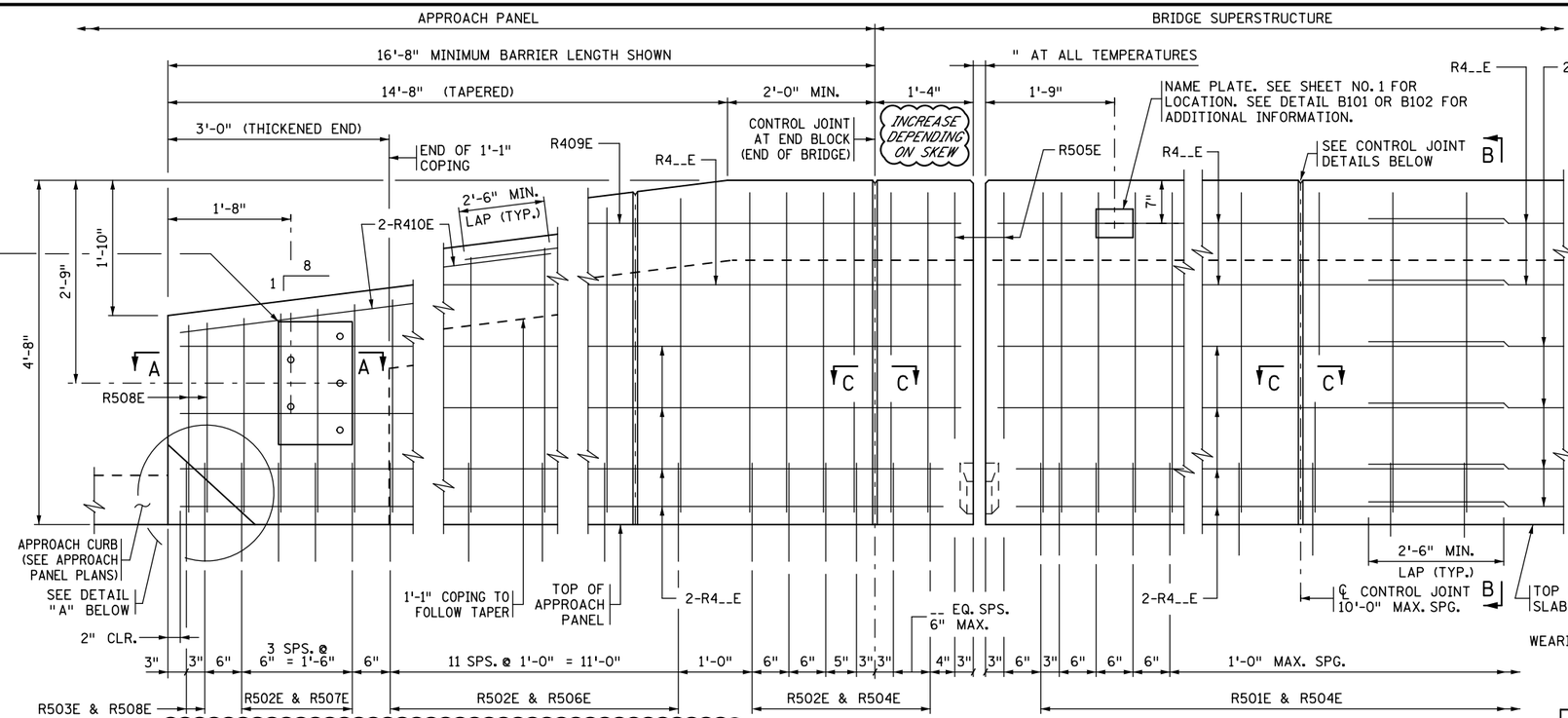

EXPANSION JOINT ④

EXPANSION DEVICE NOT SHOWN

CONTROL JOINT

INSIDE ELEVATION OF BARRIER

CONCRETE WEARING COURSE NOT SHOWN

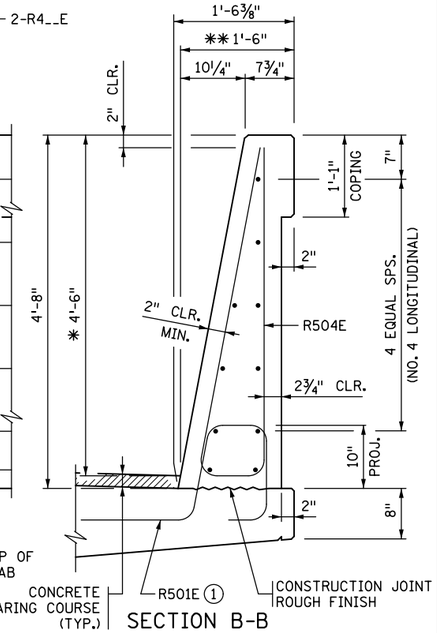

SECTION B-B

** DIMENSION SHOWN IS TO THE TOP OF THE WEARING COURSE AT GUTTERLINE.

DESIGNER NOTE
(REMOVE PRIOR TO PLOTTING FINAL PLAN):

MINIMUM BARRIER LENGTH ON APPROACH PANEL IS 16'-8" WITH MINIMUM OF 22 R502E AND R503E DOWELS WITH ACCOMPANYING APPROPRIATE BARRIER VERTICAL BARS, 12" MAX. SPACING.
VERIFY APPROACH BARRIER LENGTH, NEED FOR A GUARDRAIL CONNECTION, AND VERTICAL TAPER WITH ROADWAY DESIGNER.
REFER TO MEMO TO DESIGNERS (2016-01) FOR ADDITIONAL REQUIREMENTS REGARDING BARRIER PLACEMENT AND LINK WITH ADJACENT RETAINING WALLS.

BARRIER MEETS NCHRP 350 TL-4 REQUIREMENTS ON BRIDGE DECK AND TL-3 ON APPROACH PANEL.

BILL OF REINFORCEMENT FOR BARRIER

BAR	NO.	LENGTH	SHAPE	LOCATION
R501E		5'-4"		BARRIER DOWEL
R502E		5'-6"		BARRIER DOWEL
R503E		5'-5"		BARRIER DOWEL
R504E		9'-6"		BARRIER VERTICAL
R505E		7'-4"		BARRIER VERTICAL
R506E	-- SER. OF 12	6'-7" TO 9'-5"		BARRIER VERTICAL
R507E	-- SER. OF 4	6'-1" TO 6'-5"		BARRIER VERTICAL
R508E		5'-6"		BARRIER VERTICAL
R409E		13'-0"		BARRIER LONGIT.
R410E		7'-7"		BARRIER LONGIT.
R4__E				BARRIER LONGIT.
R4__E				BARRIER LONGIT.
R4__E				BARRIER LONGIT.
R4__E				BARRIER LONGIT.

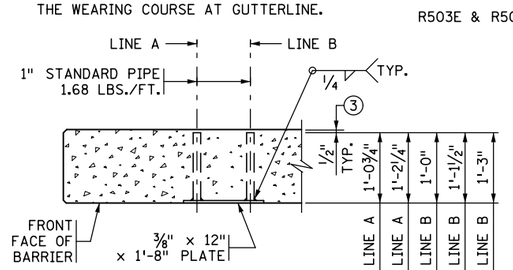

SECTION A-A

(REINFORCEMENT NOT SHOWN)

TRIM GUARDRAIL BOLTS SUCH THAT NO MORE THAN 1 1/2" PROTRUDES FROM BACK FACE OF BARRIER.

☆ DIMENSIONS INCLUDE 3/8" PLATE

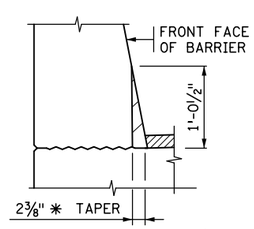

VIEW F-F

AT BARRIER END

* AT TOP OF STRUCTURAL SLAB

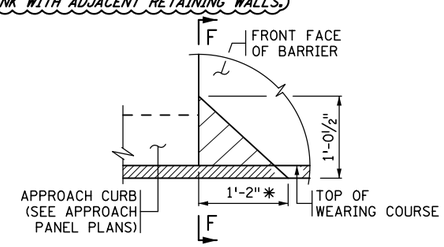

DETAIL "A"

ELEVATION VIEW
(WEARING COURSE SHOWN)

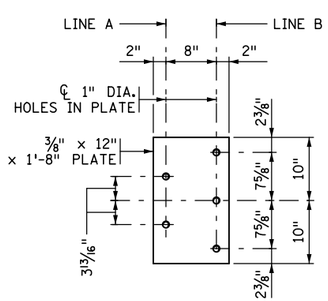

GUARDRAIL CONNECTION DETAIL

GALVANIZE AFTER FABRICATION PER SPEC. 3394
ESTIMATED WEIGHT = 35 LBS.

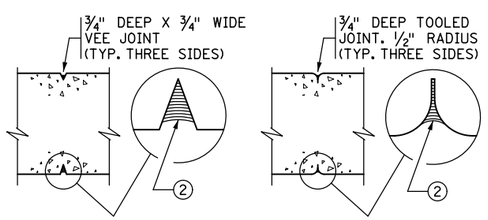

SECTION C-C

CONTRACTOR OPTION 1

SECTION C-C

CONTRACTOR OPTION 2

CONTROL JOINT DETAILS

WHEN USING SLIP FORM METHOD TO PLACE THE CONCRETE, CUT JOINT 3 INCHES DEEP USING MARGIN TROWEL OR SIMILAR MEANS IMMEDIATELY AFTER CONCRETE PLACEMENT (TYP. THREE SIDES).

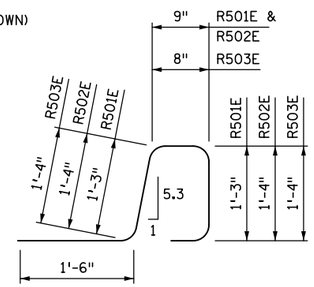

R501E, R502E & R503E

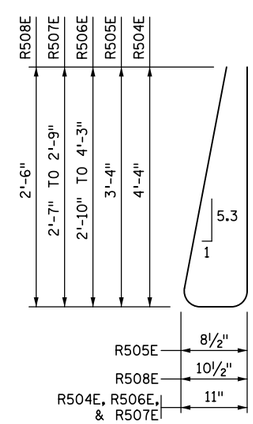

R504E, R505E, R506E, R507E & R508E

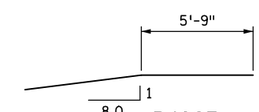

R409E

GENERAL NOTES

MEASURE PAYMENT LENGTH BETWEEN THE OUTSIDE ENDS OF THE BARRIER.

CONCRETE BARRIER = 673 LBS./FT. (0.166 CU. YDS./FT.)

FINISH ALL EDGES OF BARRIER WITH 1/2" CHAMFER, EXCEPT WHERE OTHERWISE NOTED.

SPACE CONTROL JOINTS AT 10 FT. MAXIMUM. REFER TO SUPERSTRUCTURE SHEET FOR SPECIFIC SPACING INFORMATION.

GUARDRAIL CONNECTION TO BE STRUCTURAL STEEL, SPEC. 3306.

GUARDRAIL CONNECTION AND NAME PLATE TO BE CONSIDERED INCIDENTAL TO BARRIER.

BARRIER QUANTITIES ARE LISTED IN SUMMARY OF QUANTITIES FOR SUPERSTRUCTURE.

① PLACE BAR ON TOP OF BOTTOM REINFORCEMENT MAT IN DECK.

② JOINT SEALANT PER MnDOT APPROVED/QUALIFIED PRODUCTS LIST - CRACK AND JOINT MATERIALS - SILICONE JOINT SEALERS.

③ REMOVE CONCRETE FROM PIPE ENDS AFTER SLIPFORMING OR FORM REMOVAL.

④ REFER TO "WATERPROOF EXPANSION DEVICE" STANDARD PLANS FOR COVER PLATE DETAILS.

REVISION:

APPROVED: AUGUST 24, 2016
Kevin Western
STATE BRIDGE ENGINEER

CERTIFIED BY _____ LICENSED PROFESSIONAL ENGINEER _____ DATE
NAME: LIC. NO.

TITLE: SINGLE SLOPE CONCRETE BARRIER 54" (TYPE S, TL-4)
PARAPET ABUTMENT WITH GUARDRAIL CONNECTION (WITH 2" CONCRETE WEARING COURSE)

DES: DR: CHK: CHK:

SHEET NO. OF SHEETS

APPROVED:

FIG. 5-397.143(B)

BRIDGE NO.

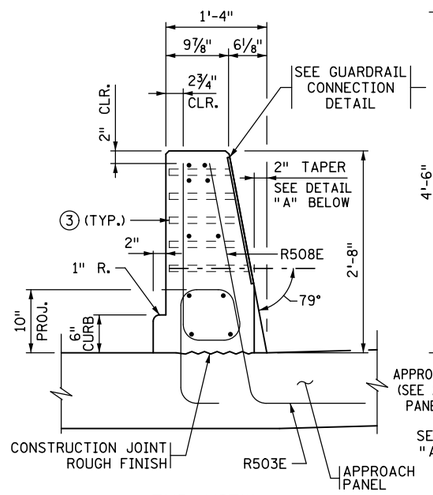

END VIEW

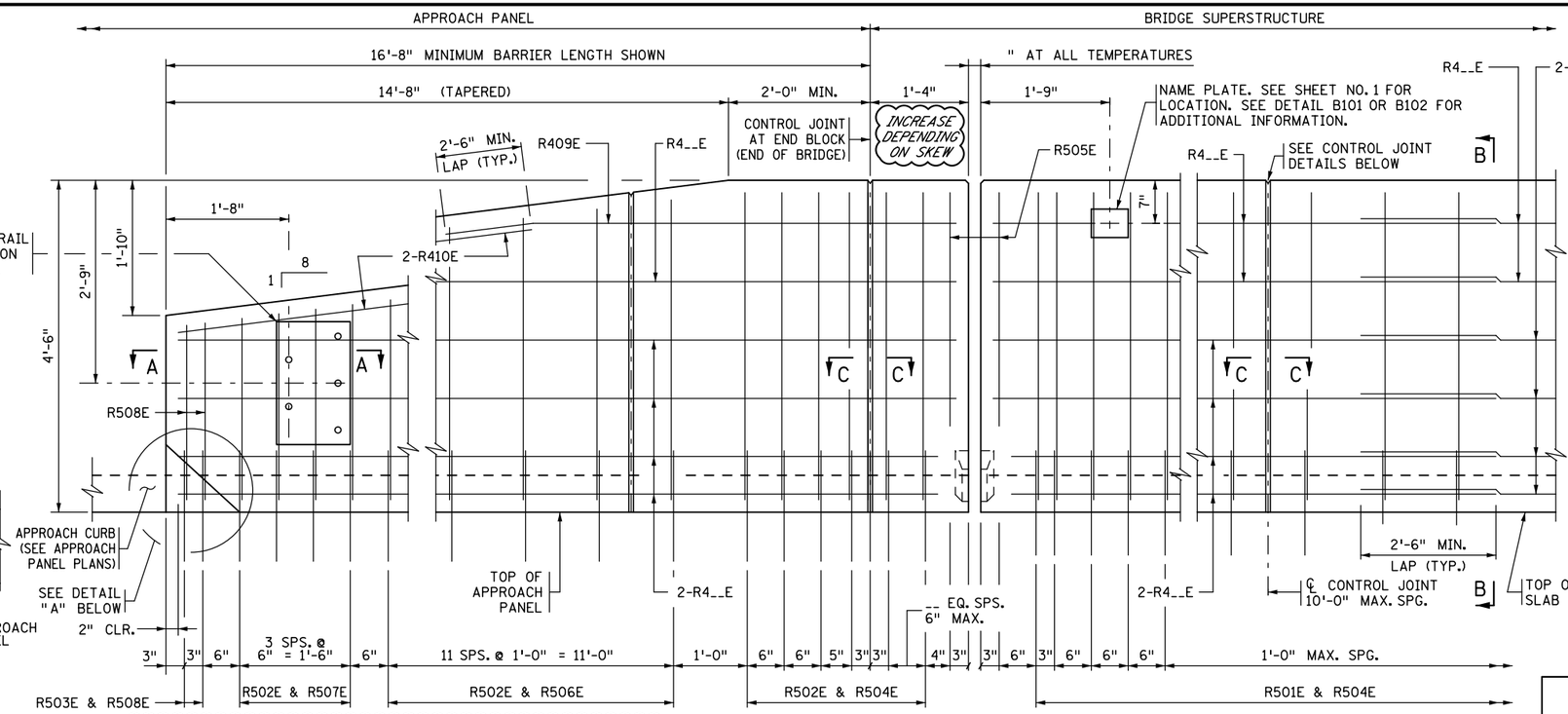

EXPANSION JOINT ④

EXPANSION DEVICE NOT SHOWN

CONTROL JOINT

INSIDE ELEVATION OF BARRIER

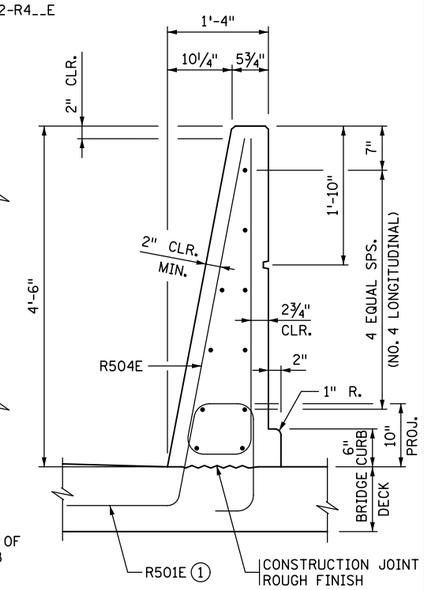

SECTION B-B

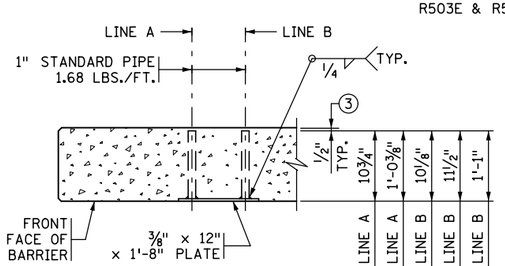

SECTION A-A

(REINFORCEMENT NOT SHOWN)

TRIM GUARDRAIL BOLTS SUCH THAT NO MORE THAN 1½" PROTRUDES FROM BACK FACE OF BARRIER.

☆ DIMENSIONS INCLUDE ⅜" PLATE

DESIGNER NOTE
(REMOVE PRIOR TO PLOTTING FINAL PLAN):

MINIMUM BARRIER LENGTH ON APPROACH PANEL IS 16'-8" WITH MINIMUM OF 22 R502E AND R503E DOWELS WITH ACCOMPANYING APPROPRIATE BARRIER VERTICAL BARS, 12" MAX. SPACING.
VERIFY APPROACH BARRIER LENGTH, NEED FOR A GUARDRAIL CONNECTION, AND VERTICAL TAPER WITH ROADWAY DESIGNER.
REFER TO MEMO TO DESIGNERS (2016-01) FOR ADDITIONAL REQUIREMENTS REGARDING BARRIER PLACEMENT.

BARRIER MEETS NCHRP 350 TL-4 REQUIREMENTS ON BRIDGE DECK AND TL-3 ON APPROACH PANEL.

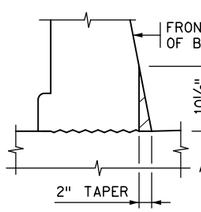

VIEW F-F

AT BARRIER END

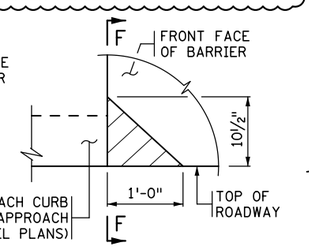

DETAIL "A"

ELEVATION VIEW

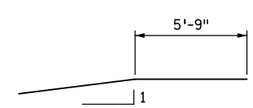

R409E

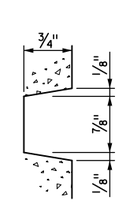

BARRIER RUSTICATION

BILL OF REINFORCEMENT FOR BARRIER				
BAR	NO.	LENGTH	SHAPE	LOCATION
R501E		5'-7"		BARRIER DOWEL
R502E		5'-9"		BARRIER DOWEL
R503E		5'-8"		BARRIER DOWEL
R504E		9'-2"		BARRIER VERTICAL
R505E		7'-0"		BARRIER VERTICAL
R506E	-- SER. OF 12	6'-3" TO 9'-1"		BARRIER VERTICAL
R507E	-- SER. OF 4	5'-9" TO 6'-1"		BARRIER VERTICAL
R508E		5'-6"		BARRIER VERTICAL
R409E		13'-0"		BARRIER LONGIT.
R410E		7'-7"		BARRIER LONGIT.
R4__E				BARRIER LONGIT.
R4__E				BARRIER LONGIT.
R4__E				BARRIER LONGIT.
R4__E				BARRIER LONGIT.

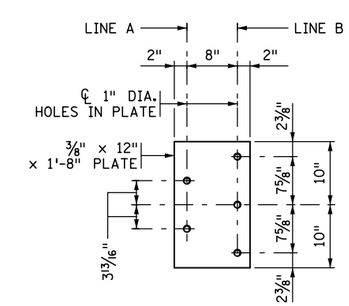

GUARDRAIL CONNECTION DETAIL

GALVANIZE AFTER FABRICATION PER SPEC. 3394
ESTIMATED WEIGHT = 34 LBS.

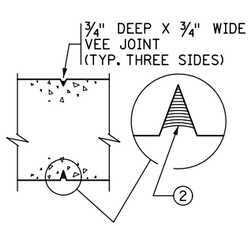

SECTION C-C

CONTRACTOR OPTION 1

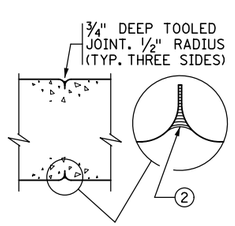

SECTION C-C

CONTRACTOR OPTION 2

CONTROL JOINT DETAILS

WHEN USING SLIP FORM METHOD TO PLACE THE CONCRETE, CUT JOINT 3 INCHES DEEP USING MARGIN TROWEL OR SIMILAR MEANS IMMEDIATELY AFTER CONCRETE PLACEMENT (TYP. THREE SIDES).

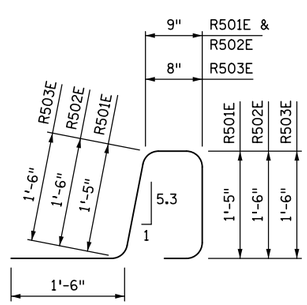

R501E, R502E, R503E

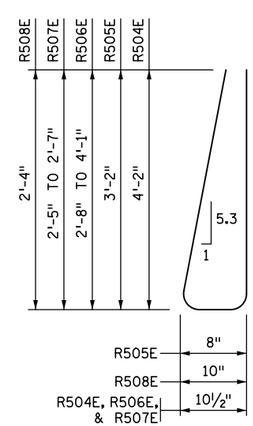

R504E, R505E, R506E, R507E & R508E

GENERAL NOTES

MEASURE PAYMENT LENGTH BETWEEN THE OUTSIDE ENDS OF THE BARRIER.

CONCRETE BARRIER = 624 LBS./FT. (0.154 CU. YDS./FT.)

FINISH ALL EDGES OF BARRIER WITH ½" CHAMFER, EXCEPT WHERE OTHERWISE NOTED.

SPACE CONTROL JOINTS AT 10 FT. MAXIMUM. REFER TO SUPERSTRUCTURE SHEET FOR SPECIFIC SPACING INFORMATION.

GUARDRAIL CONNECTION TO BE STRUCTURAL STEEL, SPEC. 3306.

GUARDRAIL CONNECTION AND NAME PLATE TO BE CONSIDERED INCIDENTAL TO BARRIER.

BARRIER QUANTITIES ARE LISTED IN SUMMARY OF QUANTITIES FOR SUPERSTRUCTURE.

① PLACE BAR ON TOP OF BOTTOM REINFORCEMENT MAT IN DECK.

② JOINT SEALANT PER MnDOT APPROVED/QUALIFIED PRODUCTS LIST - CRACK AND JOINT MATERIALS - SILICONE JOINT SEALERS.

③ REMOVE CONCRETE FROM PIPE ENDS AFTER SLIPFORMING OR FORM REMOVAL.

④ REFER TO "WATERPROOF EXPANSION DEVICE" STANDARD PLANS FOR COVER PLATE DETAILS.

REVISION:

APPROVED: AUGUST 24, 2016
Kevin Western
STATE BRIDGE ENGINEER

CERTIFIED BY _____ LICENSED PROFESSIONAL ENGINEER _____ DATE

NAME: LIC. NO.

TITLE: SINGLE SLOPE CONCRETE BARRIER 54" (TYPE S, TL-4)
PARAPET ABUTMENT WITH BRIDGE SLAB SIDEWALK AND GUARDRAIL CONNECTION (WITHOUT CONCRETE WEARING COURSE)

DES: DR: CHK: CHK:

SHEET NO. OF SHEETS

APPROVED:

FIG. 5-397.143(C)

BRIDGE NO.

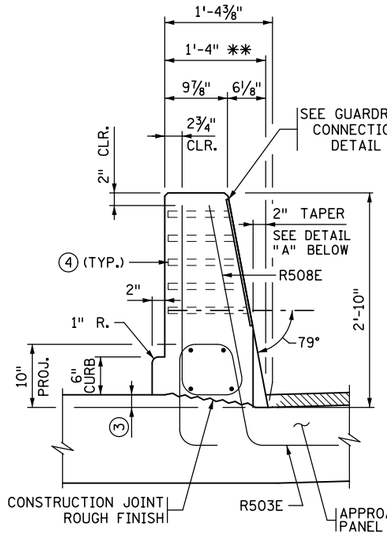

END VIEW

** DIMENSION SHOWN IS TO THE TOP OF THE WEARING COURSE AT GUTTERLINE.

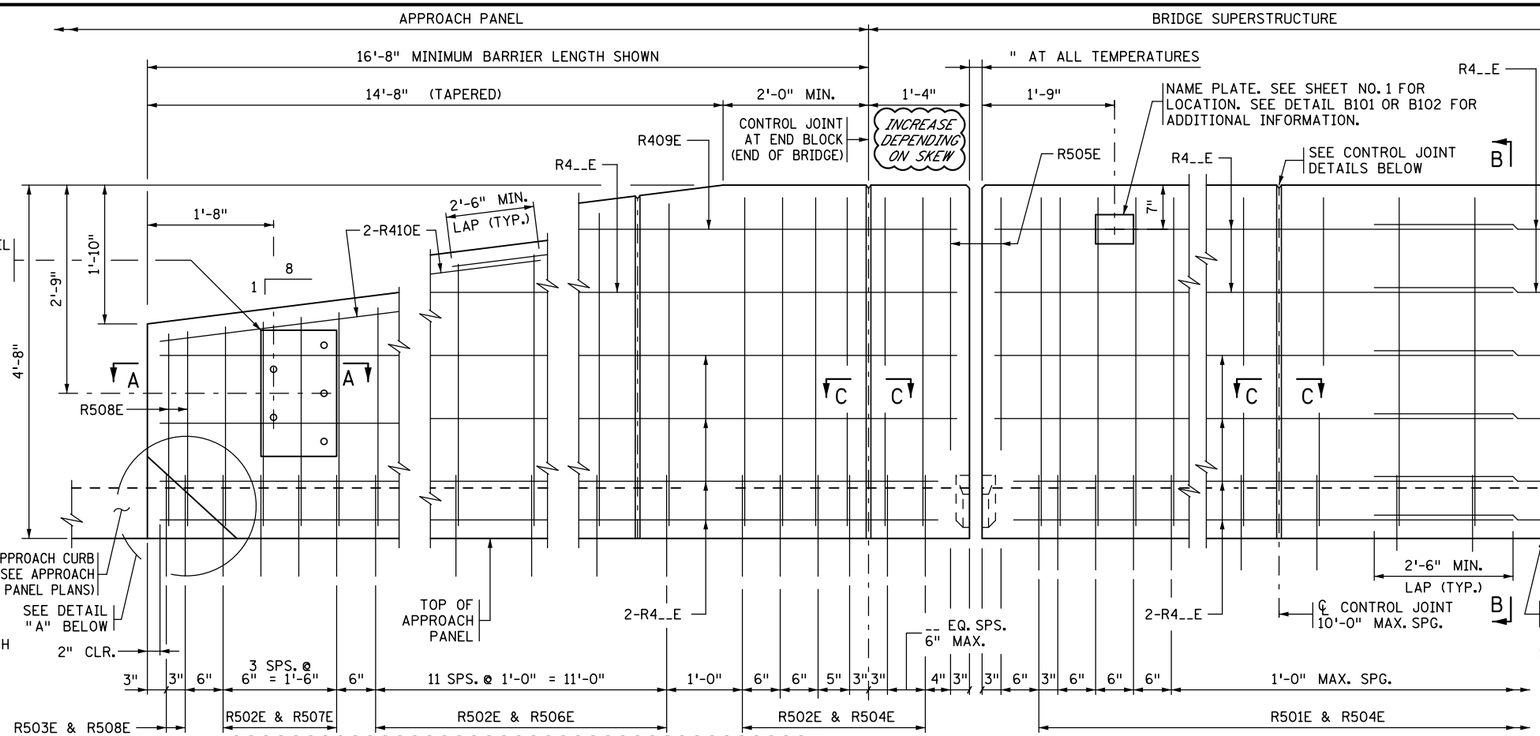

INSIDE ELEVATION OF BARRIER

CONCRETE WEARING COURSE NOT SHOWN

EXPANSION JOINT ⑤

EXPANSION DEVICE NOT SHOWN

CONTROL JOINT

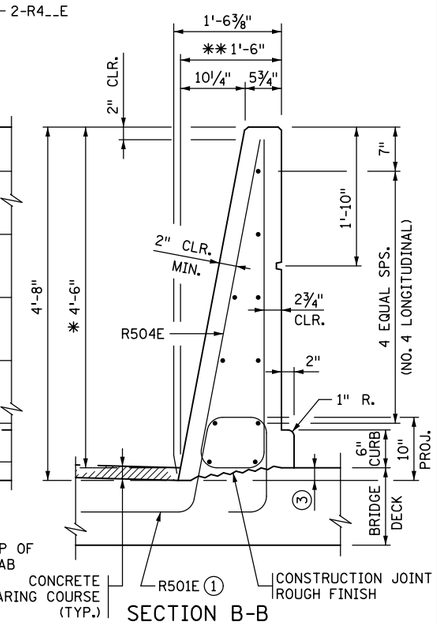

SECTION B-B

** DIMENSION SHOWN IS TO THE TOP OF THE WEARING COURSE AT GUTTERLINE.

BILL OF REINFORCEMENT FOR BARRIER

BAR	NO.	LENGTH	SHAPE	LOCATION
R501E		5'-4"		BARRIER DOWEL
R502E		5'-6"		BARRIER DOWEL
R503E		5'-5"		BARRIER DOWEL
R504E		9'-6"		BARRIER VERTICAL
R505E		7'-4"		BARRIER VERTICAL
R506E	-- SER. OF 12	6'-7" TO 9'-5"		BARRIER VERTICAL
R507E	-- SER. OF 4	6'-1" TO 6'-5"		BARRIER VERTICAL
R508E		5'-6"		BARRIER VERTICAL
R409E		13'-0"		BARRIER LONGIT.
R410E		7'-7"		BARRIER LONGIT.
R4__E				BARRIER LONGIT.
R4__E				BARRIER LONGIT.
R4__E				BARRIER LONGIT.
R4__E				BARRIER LONGIT.

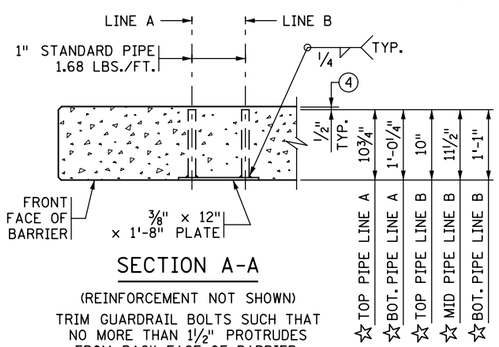

SECTION A-A

(REINFORCEMENT NOT SHOWN)

TRIM GUARDRAIL BOLTS SUCH THAT NO MORE THAN 1½" PROTRUDES FROM BACK FACE OF BARRIER.

☆ DIMENSIONS INCLUDE ⅜" PLATE

DESIGNER NOTE
(REMOVE PRIOR TO PLOTTING FINAL PLAN):

MINIMUM BARRIER LENGTH ON APPROACH PANEL IS 16'-8" WITH MINIMUM OF 22 R502E AND R503E DOWELS WITH ACCOMPANYING APPROPRIATE BARRIER VERTICAL BARS, 12" MAX. SPACING.
VERIFY APPROACH BARRIER LENGTH, NEED FOR A GUARDRAIL CONNECTION, AND VERTICAL TAPER WITH ROADWAY DESIGNER.
REFER TO MEMO TO DESIGNERS (2016-01) FOR ADDITIONAL REQUIREMENTS REGARDING BARRIER PLACEMENT AND LINK WITH ADJACENT RETAINING WALLS.

BARRIER MEETS NCHRP 350 TL-4 REQUIREMENTS ON BRIDGE DECK AND TL-3 ON APPROACH PANEL.

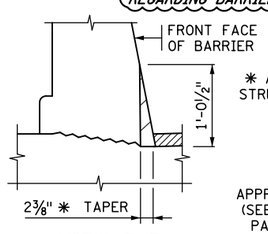

VIEW F-F

AT BARRIER END

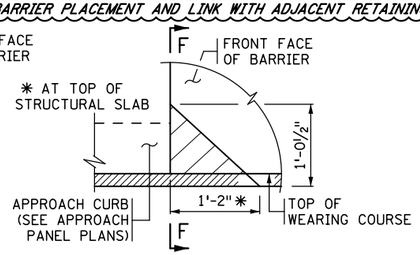

DETAIL "A"

ELEVATION VIEW (WEARING COURSE SHOWN)

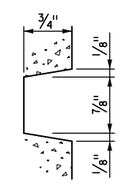

BARRIER RUSTICATION

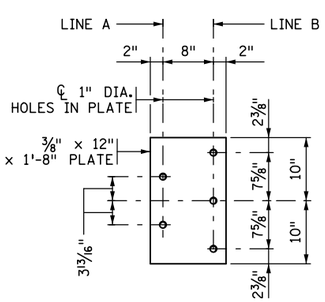

GUARDRAIL CONNECTION DETAIL

GALVANIZE AFTER FABRICATION PER SPEC. 3394
ESTIMATED WEIGHT = 34 LBS.

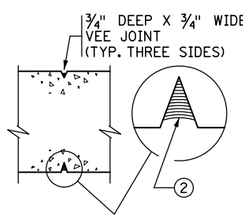

SECTION C-C

CONTRACTOR OPTION 1

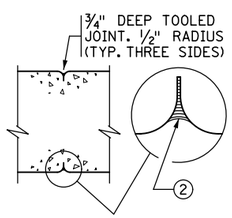

SECTION C-C

CONTRACTOR OPTION 2

CONTROL JOINT DETAILS

WHEN USING SLIP FORM METHOD TO PLACE THE CONCRETE, CUT JOINT 3 INCHES DEEP USING MARGIN TROWEL OR SIMILAR MEANS IMMEDIATELY AFTER CONCRETE PLACEMENT (TYP. THREE SIDES).

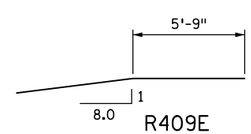

R409E

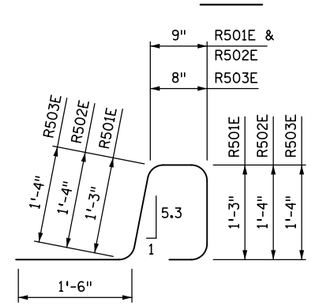

R501E, R502E & R503E

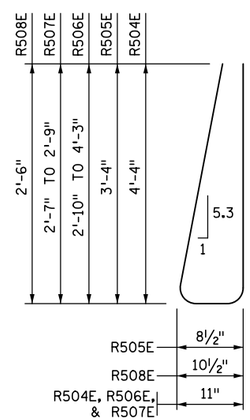

R504E, R505E, R506E, R507E & R508E

GENERAL NOTES

MEASURE PAYMENT LENGTH BETWEEN THE OUTSIDE ENDS OF THE BARRIER.

CONCRETE BARRIER = 643 LBS./FT. (0.159 CU. YDS./FT.)

FINISH ALL EDGES OF BARRIER WITH ½" CHAMFER, EXCEPT WHERE OTHERWISE NOTED.

SPACE CONTROL JOINTS AT 10 FT. MAXIMUM. REFER TO SUPERSTRUCTURE SHEET FOR SPECIFIC SPACING INFORMATION.

GUARDRAIL CONNECTION TO BE STRUCTURAL STEEL, SPEC. 3306.

GUARDRAIL CONNECTION AND NAME PLATE TO BE CONSIDERED INCIDENTAL TO BARRIER.

BARRIER QUANTITIES ARE LISTED IN SUMMARY OF QUANTITIES FOR SUPERSTRUCTURE.

① PLACE BAR ON TOP OF BOTTOM REINFORCEMENT MAT IN DECK.

② JOINT SEALANT PER MnDOT APPROVED/QUALIFIED PRODUCTS LIST - CRACK AND JOINT MATERIALS - SILICONE JOINT SEALERS.

③ DIMENSIONS TO BE DETERMINED BASED ON THE BRIDGE DECK SLOPE.

④ REMOVE CONCRETE FROM PIPE ENDS AFTER SLIPFORMING OR FORM REMOVAL.

⑤ REFER TO "WATERPROOF EXPANSION DEVICE" STANDARD PLANS FOR COVER PLATE DETAILS.

REVISION:

APPROVED: AUGUST 24, 2016
Kevin Western
STATE BRIDGE ENGINEER

CERTIFIED BY _____ LICENSED PROFESSIONAL ENGINEER _____ DATE
NAME: LIC. NO.

TITLE: SINGLE SLOPE CONCRETE BARRIER 54" (TYPE S, TL-4)
PARAPET ABUTMENT WITH BRIDGE SLAB SIDEWALK AND GUARDRAIL CONNECTION (WITH 2" CONCRETE WEARING COURSE)

DES: DR: CHK: CHK:

SHEET NO. OF SHEETS

FIG. 5-397.143(D)

APPROVED:

BRIDGE NO.

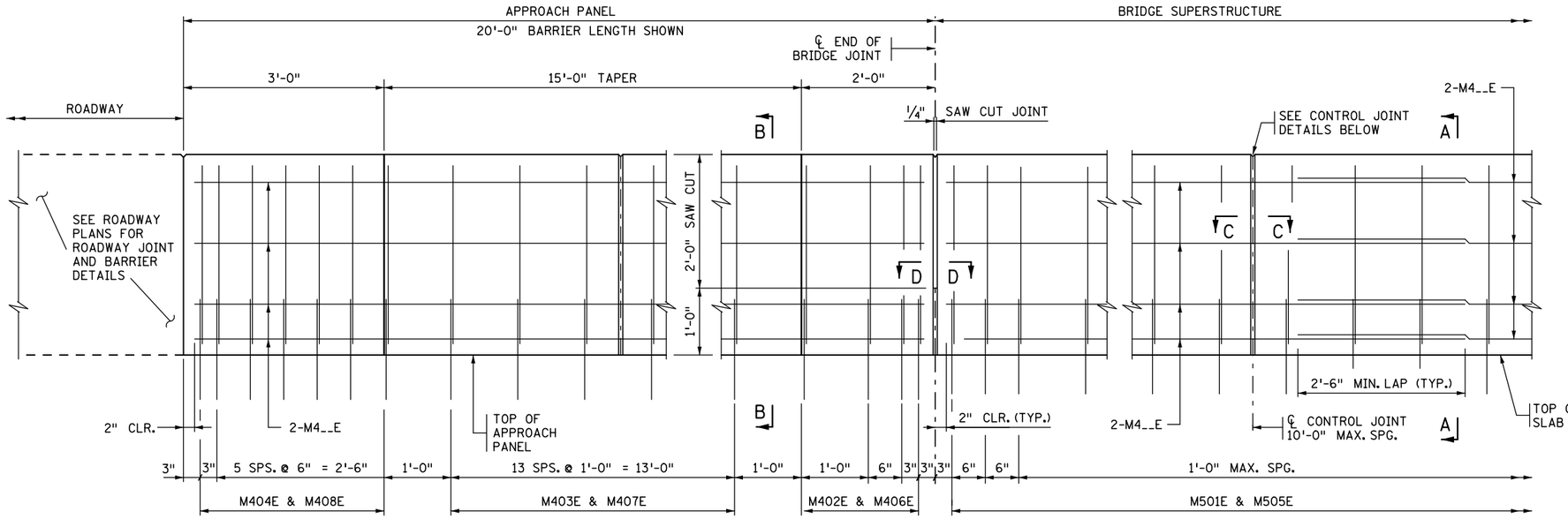

JOINT AT ABUTMENT

(INTEGRAL OR SEMI-INTEGRAL ABUTMENT)

CONTROL JOINT

INSIDE ELEVATION OF BARRIER

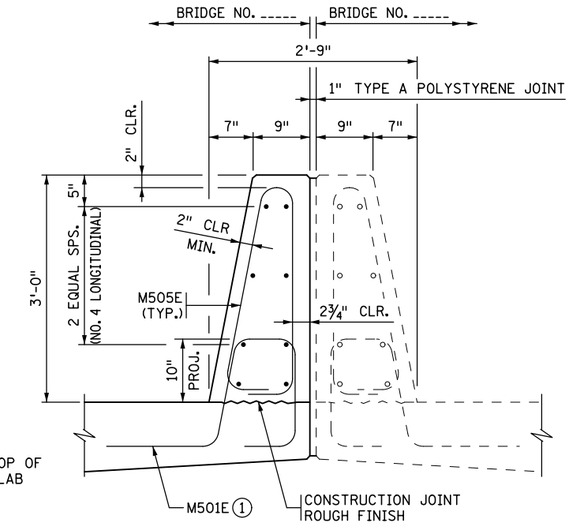

SECTION A-A

DESIGNER NOTE
(REMOVE PRIOR TO PLOTTING FINAL PLAN):
VERIFY LENGTH OF BARRIER ON APPROACH PANEL WITH ROADWAY DESIGNER. REFER TO MEMO TO DESIGNERS (2016-01) FOR ADDITIONAL REQUIREMENTS REGARDING BARRIER PLACEMENT.

DESIGNER NOTE
(REMOVE PRIOR TO PLOTTING FINAL PLAN):
AVOID LAYOUTS WITH HORIZONTAL GAP BETWEEN SPLIT MEDIAN BARRIERS OF 2" TO 6", AS BARRIERS CANNOT BE SLIPFORMED. IF GAP EXCEEDS 6" CONSIDER USING STANDARD FIGURE 5-397.138 OR .139 IN LIEU OF THIS STANDARD.

BARRIER ON EACH SIDE MEETS NCHRP 350 TL-4 REQUIREMENTS ON BRIDGE DECK AND TL-3 ON APPROACH PANEL.

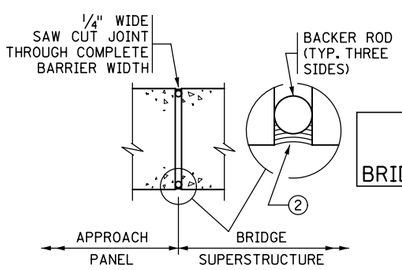

SECTION D-D

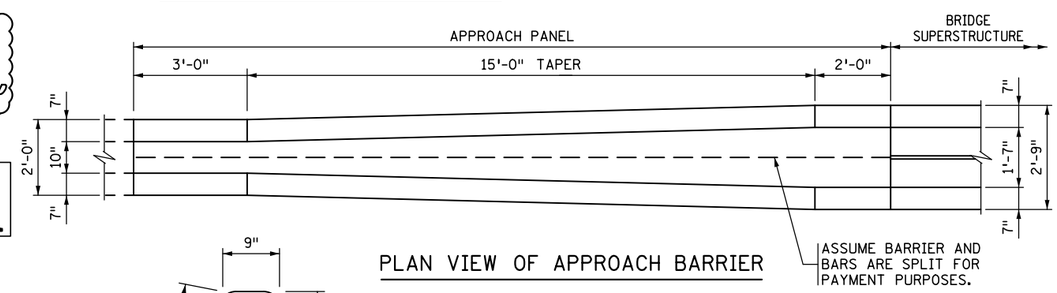

PLAN VIEW OF APPROACH BARRIER

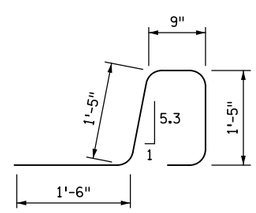

M501E

BILL OF REINFORCEMENT FOR BARRIER				
BAR	NO.	LENGTH	SHAPE	LOCATION
M501E		5'-7"		BARRIER DOWEL
M402E		7'-7"		BARRIER DOWEL
M403E	SER. OF 14	6'-11" TO 7'-7"		BARRIER DOWEL
M404E		6'-10"		BARRIER DOWEL
M505E		6'-11"		BARRIER VERTICAL
M406E		9'-5"		BARRIER VERTICAL
M407E	SER. OF 14	8'-9" TO 9'-5"		BARRIER VERTICAL
M408E		8'-0"		BARRIER VERTICAL
M4__E				BARRIER LONGIT.
M4__E				BARRIER LONGIT.
M4__E				BARRIER LONGIT.
M4__E				BARRIER LONGIT.
M4__E				BARRIER LONGIT.

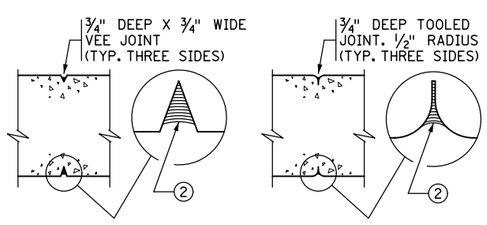

SECTION C-C
CONTRACTOR OPTION 1

SECTION C-C
CONTRACTOR OPTION 2

CONTROL JOINT DETAILS

WHEN USING SLIP FORM METHOD TO PLACE THE CONCRETE, CUT JOINT 3 INCHES DEEP USING MARGIN TROWEL OR SIMILAR MEANS IMMEDIATELY AFTER CONCRETE PLACEMENT (TYP. THREE SIDES).

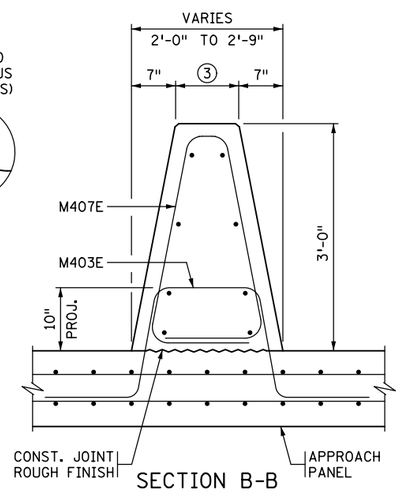

SECTION B-B
CONCRETE APPROACH ROADWAY

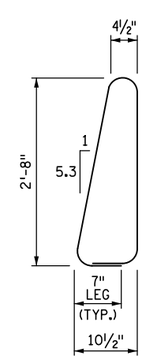

M505E

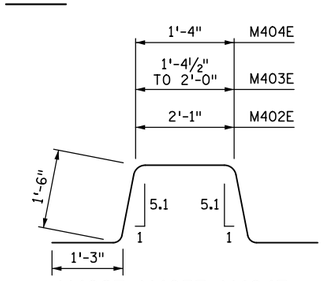

M402E, M403E, M404E

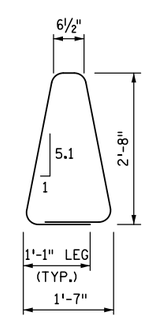

M408E

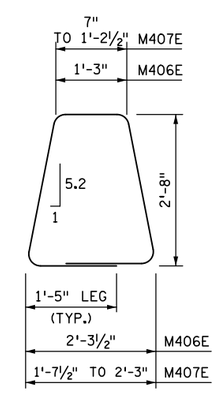

M406E, M407E

GENERAL NOTES

MEASURE PAYMENT LENGTH BETWEEN THE OUTSIDE ENDS OF THE BARRIER FROM THE E8 JOINT. MEASURED LENGTH IS FOR ONE SIDE OF THE SPLIT MEDIAN BARRIER.

CONCRETE BARRIER = 469 LBS./FT. (0.116 CU. YDS./FT.) PER SIDE.

FINISH ALL EDGES OF BARRIER WITH ½" CHAMFER, EXCEPT WHERE OTHERWISE NOTED.

SPACE CONTROL JOINTS AT 10 FT. MAXIMUM. REFER TO SUPERSTRUCTURE SHEET FOR SPECIFIC SPACING INFORMATION.

BARRIER QUANTITIES ARE LISTED IN SUMMARY OF QUANTITIES FOR SUPERSTRUCTURE.

① PLACE BAR ON TOP OF BOTTOM REINFORCEMENT MAT IN DECK.
② JOINT SEALANT PER MnDOT APPROVED/QUALIFIED PRODUCTS LIST - CRACK AND JOINT MATERIALS - SILICONE JOINT SEALERS.
③ VARIES FROM 10" TO 1'-7".

REVISION:

APPROVED: AUGUST 24, 2016
Kevin Western
STATE BRIDGE ENGINEER

CERTIFIED BY _____ LICENSED PROFESSIONAL ENGINEER _____ DATE
NAME: LIC. NO.

TITLE: SPLIT MEDIAN BARRIER 36" (TYPE S, TL-4)
INTEGRAL OR SEMI-INTEGRAL ABUTMENT (WITHOUT CONCRETE WEARING COURSE)

DES: DR: CHK: CHK:
SHEET NO. OF SHEETS

APPROVED:

FIG. 5-397.144(A)

BRIDGE NO.

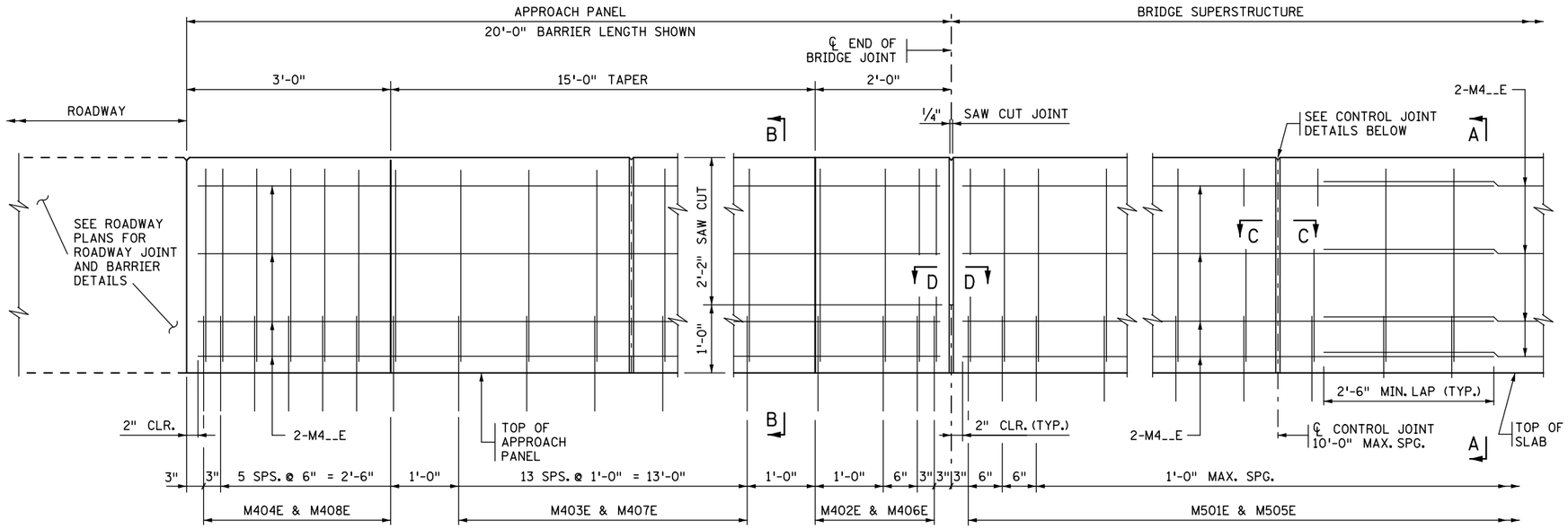

JOINT AT ABUTMENT

(INTEGRAL OR SEMI-INTEGRAL ABUTMENT)

CONTROL JOINT

INSIDE ELEVATION OF BARRIER

CONCRETE WEARING COURSE NOT SHOWN

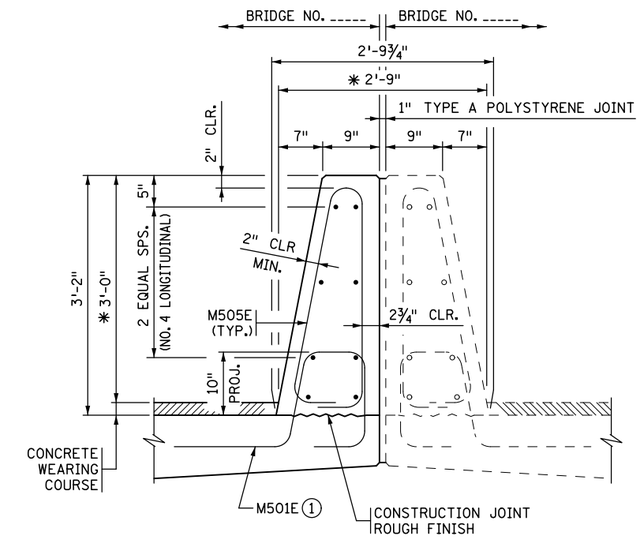

SECTION A-A

✱ DIMENSION SHOWN IS TO THE TOP OF THE WEARING COURSE AT GUTTERLINE.

DESIGNER NOTE
(REMOVE PRIOR TO PLOTTING FINAL PLAN):
VERIFY LENGTH OF BARRIER ON APPROACH PANEL WITH ROADWAY DESIGNER. REFER TO MEMO TO DESIGNERS (2016-01) FOR ADDITIONAL REQUIREMENTS REGARDING BARRIER PLACEMENT.

DESIGNER NOTE
(REMOVE PRIOR TO PLOTTING FINAL PLAN):
AVOID LAYOUTS WITH HORIZONTAL GAP BETWEEN SPLIT MEDIAN BARRIERS OF 2" TO 6", AS BARRIERS CANNOT BE SLIPFORMED. IF GAP EXCEEDS 6" CONSIDER USING STANDARD FIGURE 5-397.138 OR .139 IN LIEU OF THIS STANDARD.

BARRIER ON EACH SIDE MEETS NCHRP 350 TL-4 REQUIREMENTS ON BRIDGE DECK AND TL-3 ON APPROACH PANEL.

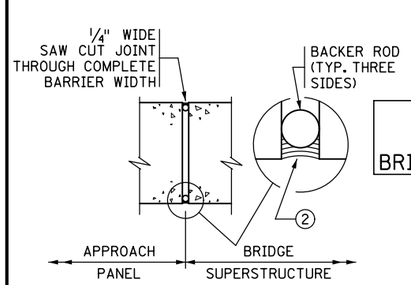

SECTION D-D

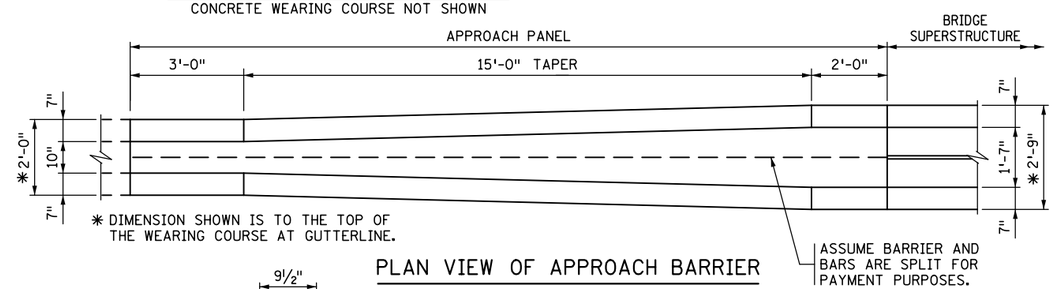

PLAN VIEW OF APPROACH BARRIER

BILL OF REINFORCEMENT FOR BARRIER				
BAR	NO.	LENGTH	SHAPE	LOCATION
M501E		5'-4"		BARRIER DOWEL
M402E	4	7'-4"		BARRIER DOWEL
M403E	SER. OF 14	6'-7" TO 7'-3"		BARRIER DOWEL
M404E		6'-7"		BARRIER DOWEL
M505E		7'-3"		BARRIER VERTICAL
M406E		9'-9"		BARRIER VERTICAL
M407E	SER. OF 14	9'-1" TO 9'-9"		BARRIER VERTICAL
M408E		8'-5"		BARRIER VERTICAL
M4__E				BARRIER LONGIT.
M4__E				BARRIER LONGIT.
M4__E				BARRIER LONGIT.
M4__E				BARRIER LONGIT.
M4__E				BARRIER LONGIT.

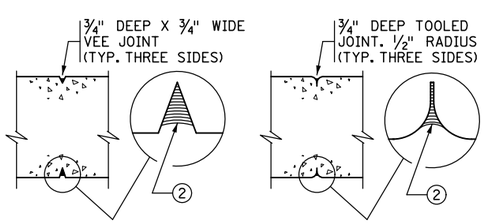

SECTION C-C

CONTRACTOR OPTION 1

SECTION C-C

CONTRACTOR OPTION 2

CONTROL JOINT DETAILS

WHEN USING SLIP FORM METHOD TO PLACE THE CONCRETE, CUT JOINT 3 INCHES DEEP USING MARGIN TROWEL OR SIMILAR MEANS IMMEDIATELY AFTER CONCRETE PLACEMENT (TYP. THREE SIDES).

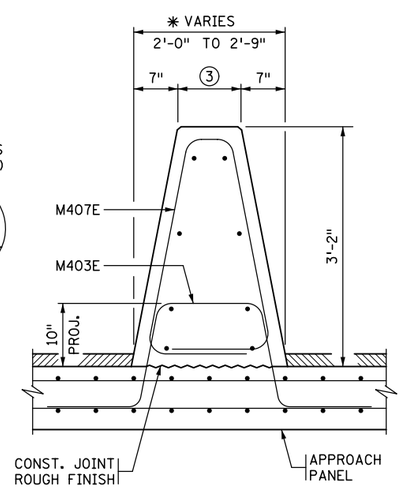

SECTION B-B

CONCRETE APPROACH ROADWAY.
✱ DIMENSION SHOWN IS TO THE TOP OF THE WEARING COURSE AT GUTTERLINE.

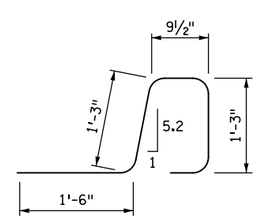

M501E

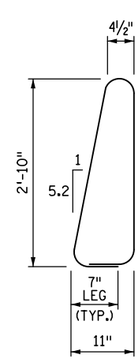

M505E

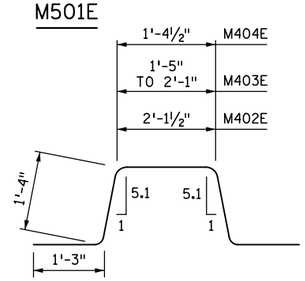

M402E, M403E, M404E

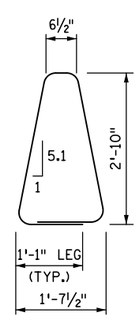

M408E

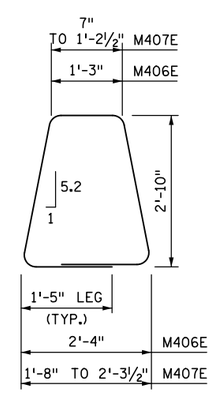

M406E, M407E

GENERAL NOTES

MEASURE PAYMENT LENGTH BETWEEN THE OUTSIDE ENDS OF THE BARRIER FROM THE E8 JOINT. MEASURED LENGTH IS FOR ONE SIDE OF THE SPLIT MEDIAN BARRIER.

CONCRETE BARRIER = 503 LBS./FT. (0.124 CU. YDS./FT.) PER SIDE.

FINISH ALL EDGES OF BARRIER WITH ½" CHAMFER, EXCEPT WHERE OTHERWISE NOTED.

SPACE CONTROL JOINTS AT 10 FT. MAXIMUM. REFER TO SUPERSTRUCTURE SHEET FOR SPECIFIC SPACING INFORMATION..

BARRIER QUANTITIES ARE LISTED IN SUMMARY OF QUANTITIES FOR SUPERSTRUCTURE.

① PLACE BAR ON TOP OF BOTTOM REINFORCEMENT MAT IN DECK.

② JOINT SEALANT PER MnDOT APPROVED/QUALIFIED PRODUCTS LIST - CRACK AND JOINT MATERIALS - SILICONE JOINT SEALERS.

③ VARIES FROM 10" TO 1'-7".

REVISION:

APPROVED: AUGUST 24, 2016

Kevin Western

STATE BRIDGE ENGINEER

CERTIFIED BY _____ LICENSED PROFESSIONAL ENGINEER _____ DATE

NAME: LIC. NO.

TITLE: SPLIT MEDIAN BARRIER 36" (TYPE S, TL-4)
INTEGRAL OR SEMI-INTEGRAL ABUTMENT
(WITH 2" CONCRETE WEARING COURSE)

DES: DR: CHK: CHK:

SHEET NO. OF SHEETS

APPROVED:

FIG. 5-397.144(B)

BRIDGE NO.

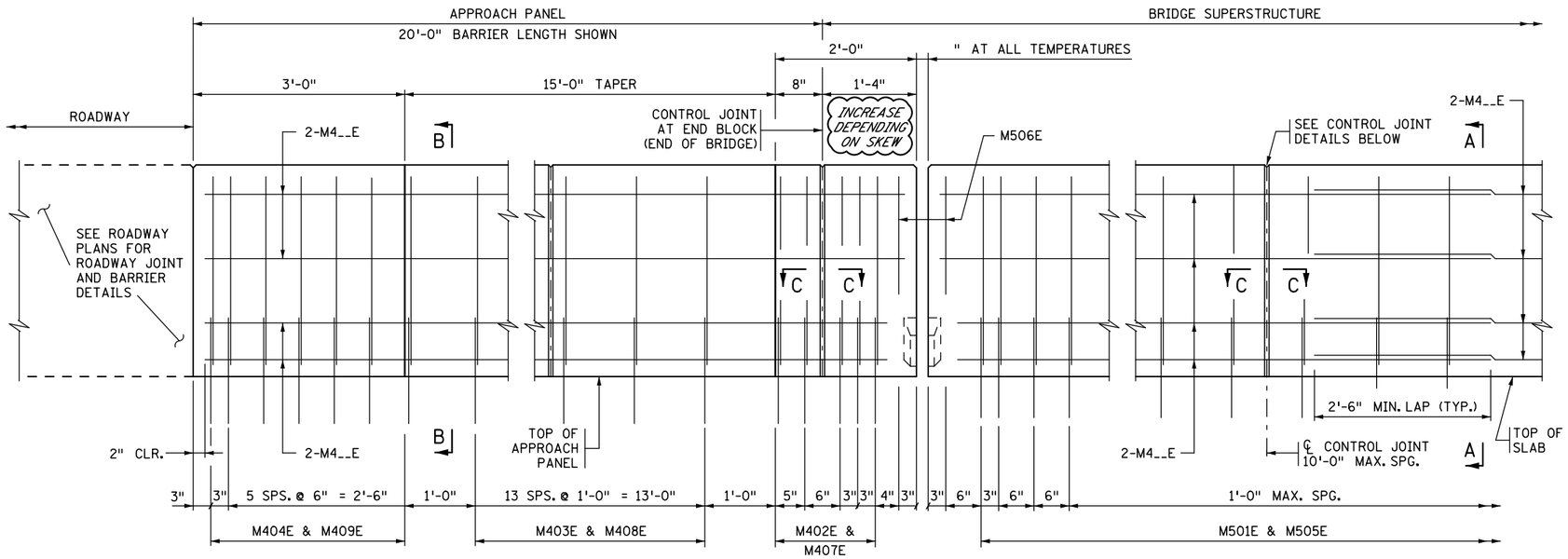

EXPANSION JOINT ④

EXPANSION DEVICE NOT SHOWN

CONTROL JOINT

INSIDE ELEVATION OF BARRIER

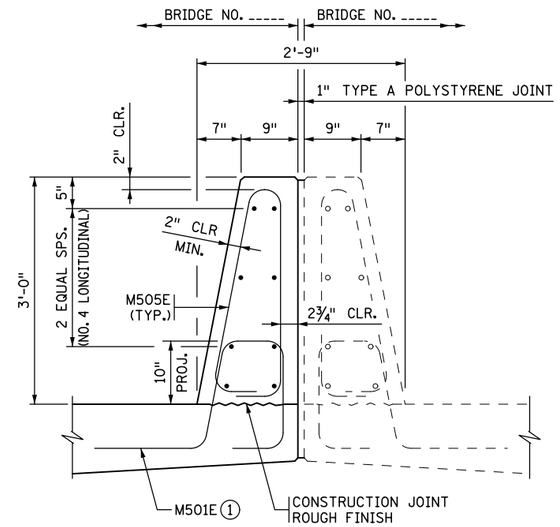

SECTION A-A

DESIGNER NOTE
(REMOVE PRIOR TO PLOTTING FINAL PLAN):
VERIFY LENGTH OF BARRIER ON APPROACH PANEL WITH ROADWAY DESIGNER. REFER TO MEMO TO DESIGNERS (2016-01) FOR ADDITIONAL REQUIREMENTS REGARDING BARRIER PLACEMENT.

DESIGNER NOTE
(REMOVE PRIOR TO PLOTTING FINAL PLAN):
AVOID LAYOUTS WITH HORIZONTAL GAP BETWEEN SPLIT MEDIAN BARRIERS OF 2" TO 6", AS BARRIERS CANNOT BE SLIPFORMED. IF GAP EXCEEDS 6" CONSIDER USING STANDARD FIGURE 5-.397-138 OR .139 IN LIEU OF THIS STANDARD.

BARRIER ON EACH SIDE MEETS NCHRP 350 TL-4 REQUIREMENTS ON BRIDGE DECK AND TL-3 ON APPROACH PANEL.

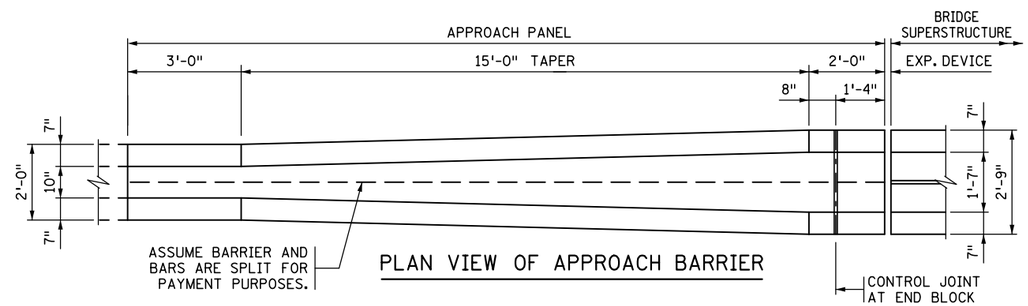

PLAN VIEW OF APPROACH BARRIER

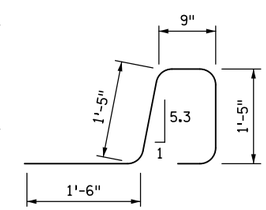

M501E

BILL OF REINFORCEMENT FOR BARRIER				
BAR	NO.	LENGTH	SHAPE	LOCATION
M501E		5'-7"		BARRIER DOWEL
M402E		7'-7"		BARRIER DOWEL
M403E	SER. OF 14	6'-10" TO 7'-6"		BARRIER DOWEL
M404E		6'-10"		BARRIER DOWEL
M505E		6'-11"		BARRIER VERTICAL
M506E		4'-11"		BARRIER VERTICAL
M407E		9'-5"		BARRIER VERTICAL
M408E	SER. OF 14	8'-9" TO 9'-5"		BARRIER VERTICAL
M409E		8'-0"		BARRIER VERTICAL
M4__E				BARRIER LONGIT.
M4__E				BARRIER LONGIT.
M4__E				BARRIER LONGIT.
M4__E				BARRIER LONGIT.
M4__E				BARRIER LONGIT.

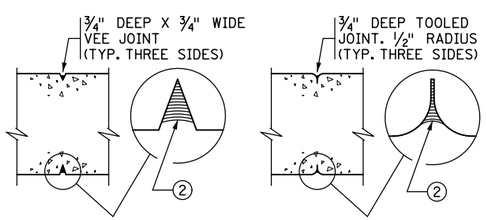

SECTION C-C
CONTRACTOR OPTION 1

SECTION C-C
CONTRACTOR OPTION 2

CONTROL JOINT DETAILS

WHEN USING SLIP FORM METHOD TO PLACE THE CONCRETE, CUT JOINT 3 INCHES DEEP USING MARGIN TROWEL OR SIMILAR MEANS IMMEDIATELY AFTER CONCRETE PLACEMENT (TYP. THREE SIDES).

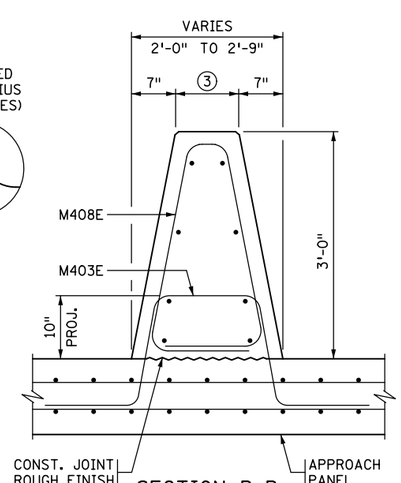

SECTION B-B
CONCRETE APPROACH ROADWAY

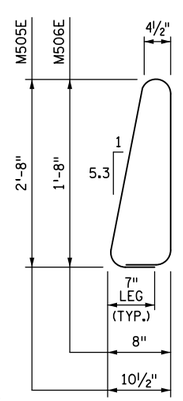

M505E, M506E

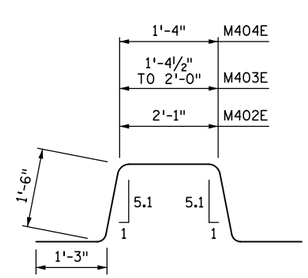

M402E, M403E, M404E

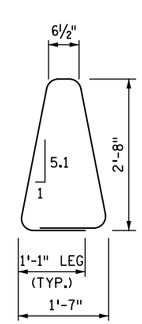

M409E

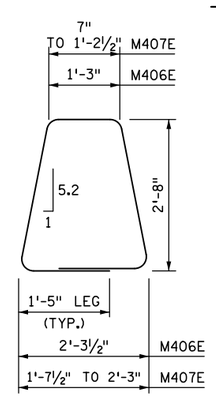

M407E, M408E

GENERAL NOTES

MEASURE PAYMENT LENGTH BETWEEN THE OUTSIDE ENDS OF THE BARRIER FROM THE E8 JOINT. MEASURED LENGTH IS FOR ONE SIDE OF THE SPLIT MEDIAN BARRIER.

CONCRETE BARRIER = 469 LBS./FT. (0.116 CU. YDS./FT.) PER SIDE.

FINISH ALL EDGES OF BARRIER WITH ½" CHAMFER, EXCEPT WHERE OTHERWISE NOTED.

SPACE CONTROL JOINTS AT 10 FT. MAXIMUM. REFER TO SUPERSTRUCTURE SHEET FOR SPECIFIC SPACING INFORMATION.

BARRIER QUANTITIES ARE LISTED IN SUMMARY OF QUANTITIES FOR SUPERSTRUCTURE.

① PLACE BAR ON TOP OF BOTTOM REINFORCEMENT MAT IN DECK.

② JOINT SEALANT PER MnDOT APPROVED/QUALIFIED PRODUCTS LIST - CRACK AND JOINT MATERIALS - SILICONE JOINT SEALERS.

③ VARIES FROM 10" TO 1'-7".

④ REFER TO "WATERPROOF EXPANSION DEVICE" STANDARD PLANS FOR COVER PLATE DETAILS.

REVISION:

APPROVED: AUGUST 24, 2016
Kevin Western
STATE BRIDGE ENGINEER

CERTIFIED BY _____ LICENSED PROFESSIONAL ENGINEER _____ DATE
NAME: LIC. NO.

TITLE: SPLIT MEDIAN BARRIER 36" (TYPE S, TL-4)
PARAPET ABUTMENT
(WITHOUT CONCRETE WEARING COURSE)

DES: DR:
CHK: CHK:
SHEET NO. OF SHEETS

FIG. 5-397.144(C)

APPROVED:

BRIDGE NO.

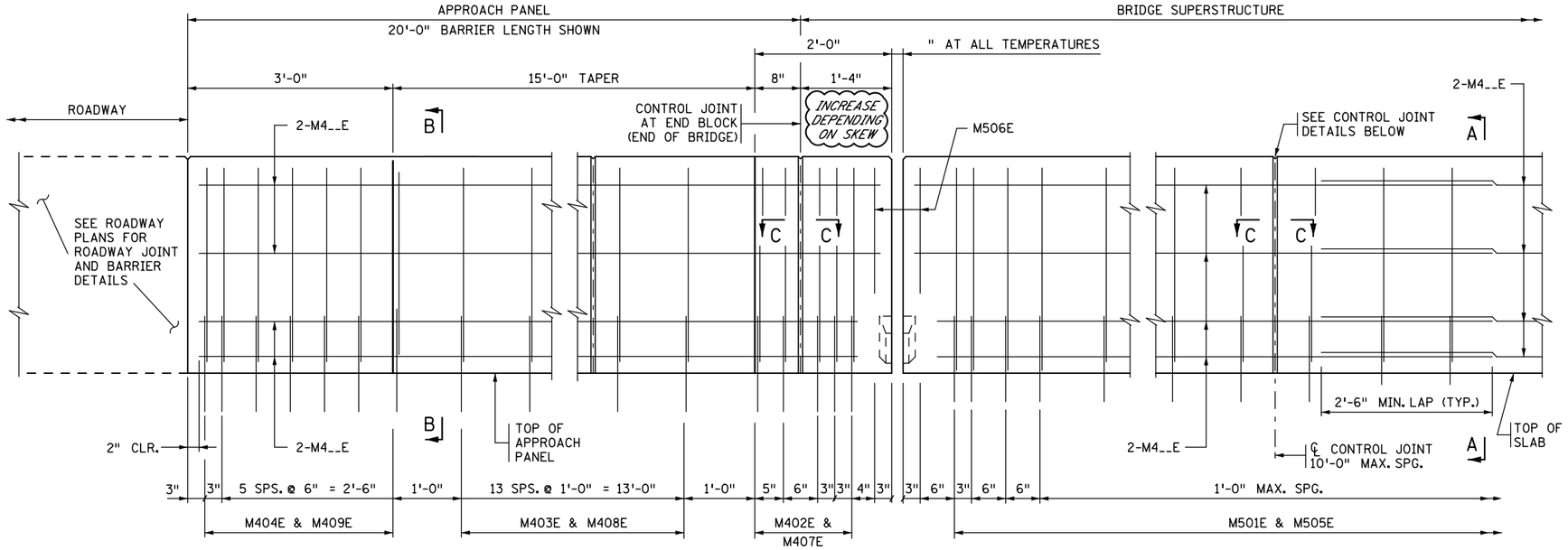

EXPANSION JOINT ④

EXPANSION DEVICE NOT SHOWN

CONTROL JOINT

INSIDE ELEVATION OF BARRIER

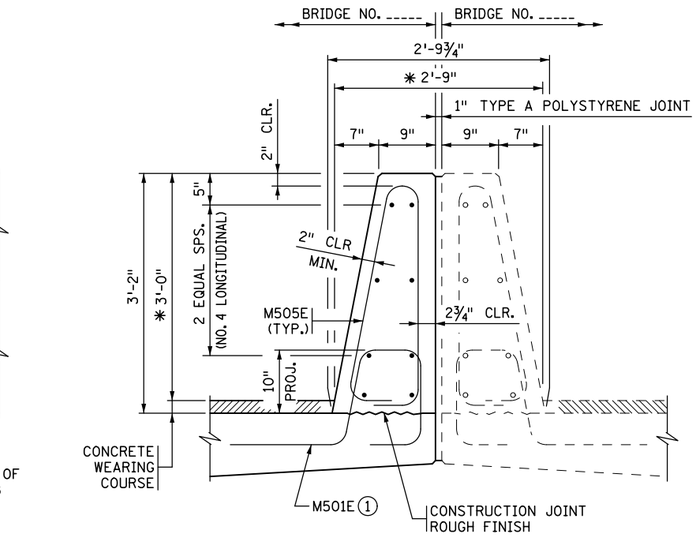

SECTION A-A

✱ DIMENSION SHOWN IS TO THE TOP OF THE WEARING COURSE AT GUTTERLINE.

DESIGNER NOTE
(REMOVE PRIOR TO PLOTTING FINAL PLAN):
VERIFY LENGTH OF BARRIER ON APPROACH PANEL WITH ROADWAY DESIGNER. REFER TO MEMO TO DESIGNERS (2016-01) FOR ADDITIONAL REQUIREMENTS REGARDING BARRIER PLACEMENT.

DESIGNER NOTE
(REMOVE PRIOR TO PLOTTING FINAL PLAN):
AVOID LAYOUTS WITH HORIZONTAL GAP BETWEEN SPLIT MEDIAN BARRIERS OF 2" TO 6", AS BARRIERS CANNOT BE SLIPFORMED. IF GAP EXCEEDS 6" CONSIDER USING STANDARD FIGURE 5-.397-138 OR .139 IN LIEU OF THIS STANDARD.

BARRIER ON EACH SIDE MEETS NCHRP 350 TL-4 REQUIREMENTS ON BRIDGE DECK AND TL-3 ON APPROACH PANEL.

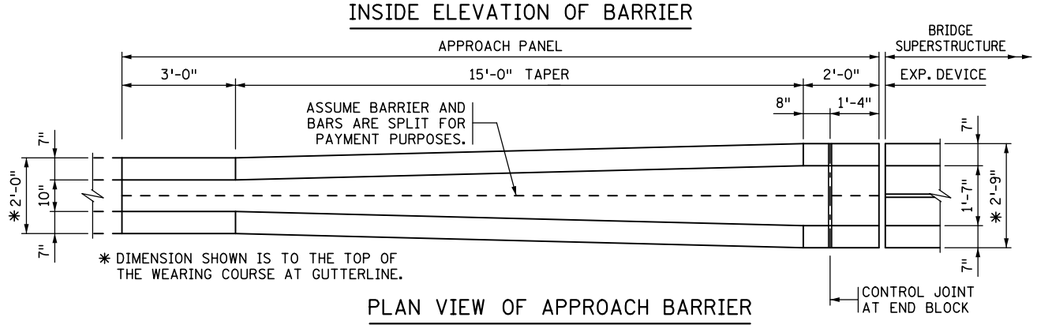

✱ DIMENSION SHOWN IS TO THE TOP OF THE WEARING COURSE AT GUTTERLINE.

PLAN VIEW OF APPROACH BARRIER

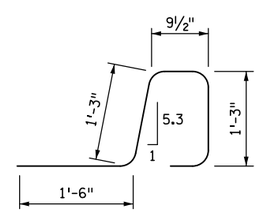

M501E

BILL OF REINFORCEMENT FOR BARRIER				
BAR	NO.	LENGTH	SHAPE	LOCATION
M501E		5'-4"		BARRIER DOWEL
M402E		7'-4"		BARRIER DOWEL
M403E	SER. OF 14	6'-7" TO 7'-3"		BARRIER DOWEL
M404E		6'-7"		BARRIER DOWEL
M505E		7'-3"		BARRIER VERTICAL
M506E		5'-3"		BARRIER VERTICAL
M407E		9'-9"		BARRIER VERTICAL
M408E	SER. OF 14	9'-1" TO 9'-9"		BARRIER VERTICAL
M409E		8'-5"		BARRIER VERTICAL
M4__E				BARRIER LONGIT.
M4__E				BARRIER LONGIT.
M4__E				BARRIER LONGIT.
M4__E				BARRIER LONGIT.
M4__E				BARRIER LONGIT.

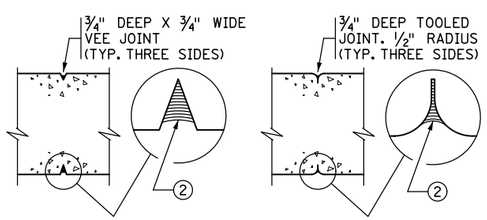

SECTION C-C

CONTRACTOR OPTION 1

SECTION C-C

CONTRACTOR OPTION 2

CONTROL JOINT DETAILS

WHEN USING SLIP FORM METHOD TO PLACE THE CONCRETE, CUT JOINT 3 INCHES DEEP USING MARGIN TROWEL OR SIMILAR MEANS IMMEDIATELY AFTER CONCRETE PLACEMENT (TYP. THREE SIDES).

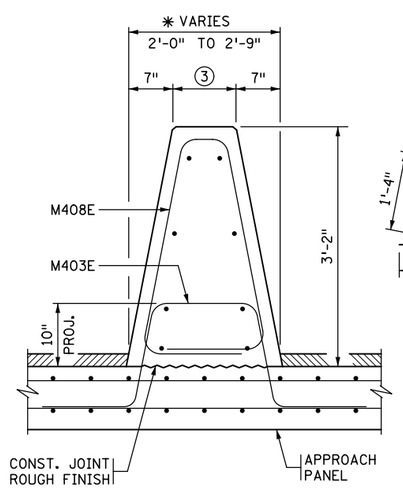

SECTION B-B

CONCRETE APPROACH ROADWAY.
✱ DIMENSION SHOWN IS TO THE TOP OF THE WEARING COURSE AT GUTTERLINE.

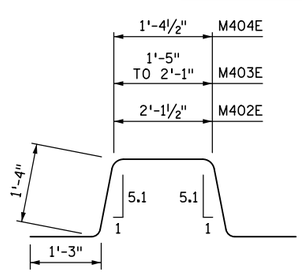

M402E, M403E, M404E

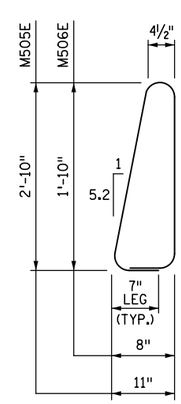

M505E, M506E

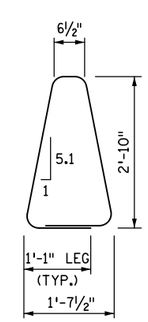

M409E

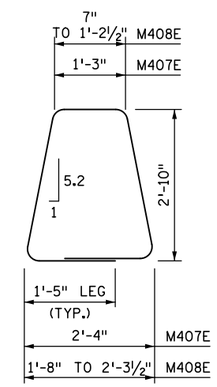

M407E, M408E

GENERAL NOTES

MEASURE PAYMENT LENGTH BETWEEN THE OUTSIDE ENDS OF THE BARRIER FROM THE E8 JOINT. MEASURED LENGTH IS FOR ONE SIDE OF THE SPLIT MEDIAN BARRIER.

CONCRETE BARRIER = 503 LBS./FT. (0.124 CU. YDS./FT.) PER SIDE.

FINISH ALL EDGES OF BARRIER WITH ½" CHAMFER, EXCEPT WHERE OTHERWISE NOTED.

SPACE CONTROL JOINTS AT 10 FT. MAXIMUM. REFER TO SUPERSTRUCTURE SHEET FOR SPECIFIC SPACING INFORMATION..

BARRIER QUANTITIES ARE LISTED IN SUMMARY OF QUANTITIES FOR SUPERSTRUCTURE.

① PLACE BAR ON TOP OF BOTTOM REINFORCEMENT MAT IN DECK.

② JOINT SEALANT PER MnDOT APPROVED/QUALIFIED PRODUCTS LIST - CRACK AND JOINT MATERIALS - SILICONE JOINT SEALERS.

③ VARIES FROM 10" TO 1'-7".

④ REFER TO "WATERPROOF EXPANSION DEVICE" STANDARD PLANS FOR COVER PLATE DETAILS.

REVISION:

APPROVED: AUGUST 24, 2016

Kevin Western

STATE BRIDGE ENGINEER

CERTIFIED BY _____ LICENSED PROFESSIONAL ENGINEER _____ DATE

NAME: LIC. NO.

TITLE: SPLIT MEDIAN BARRIER 36" (TYPE S, TL-4) PARAPET ABUTMENT (WITH 2" CONCRETE WEARING COURSE)

DES: DR: CHK: CHK:

SHEET NO. OF SHEETS

APPROVED:

FIG. 5-397.144(D)

BRIDGE NO.

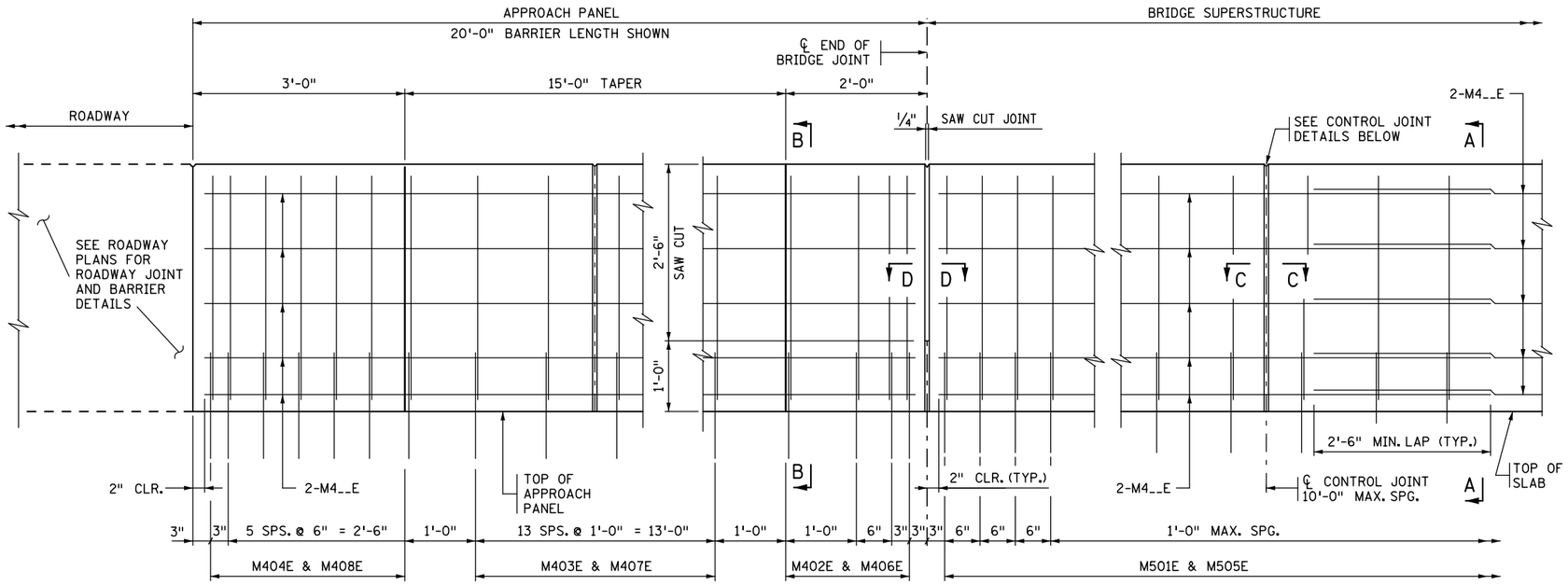

JOINT AT ABUTMENT

(INTEGRAL OR SEMI-INTEGRAL ABUTMENT)

CONTROL JOINT

INSIDE ELEVATION OF BARRIER

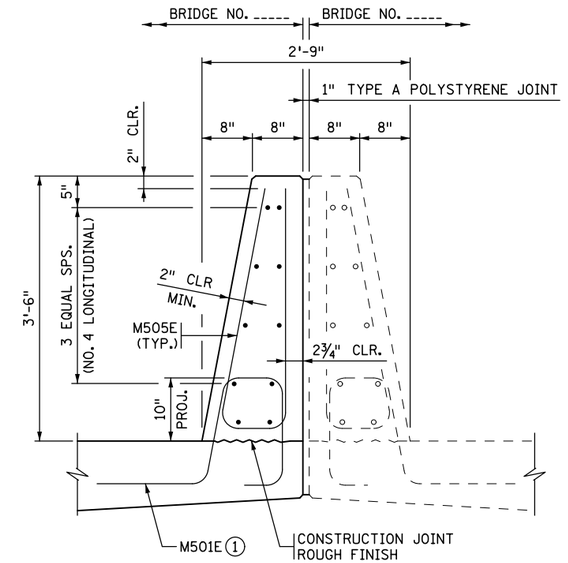

SECTION A-A

DESIGNER NOTE
(REMOVE PRIOR TO PLOTTING FINAL PLAN):
VERIFY LENGTH OF BARRIER ON APPROACH PANEL WITH ROADWAY DESIGNER. REFER TO MEMO TO DESIGNERS (2016-01) FOR ADDITIONAL REQUIREMENTS REGARDING BARRIER PLACEMENT.

DESIGNER NOTE
(REMOVE PRIOR TO PLOTTING FINAL PLAN):
AVOID LAYOUTS WITH HORIZONTAL GAP BETWEEN SPLIT MEDIAN BARRIERS OF 2" TO 6", AS BARRIERS CANNOT BE SLIPFORMED. IF GAP EXCEEDS 6" CONSIDER USING STANDARD FIGURE 5-397.140 OR .141 IN LIEU OF THIS STANDARD.

BARRIER ON EACH SIDE MEETS NCHRP 350 TL-4 REQUIREMENTS ON BRIDGE DECK AND TL-3 ON APPROACH PANEL.

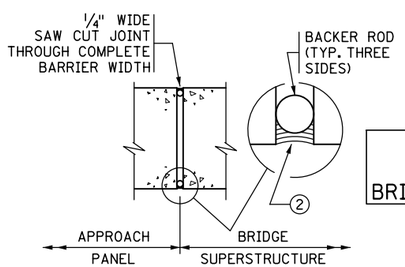

SECTION D-D

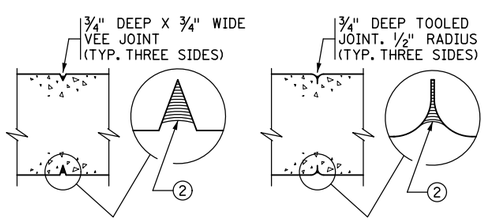

SECTION C-C
CONTRACTOR OPTION 1

SECTION C-C
CONTRACTOR OPTION 2

CONTROL JOINT DETAILS

WHEN USING SLIP FORM METHOD TO PLACE THE CONCRETE, CUT JOINT 3 INCHES DEEP USING MARGIN TROWEL OR SIMILAR MEANS IMMEDIATELY AFTER CONCRETE PLACEMENT (TYP. THREE SIDES).

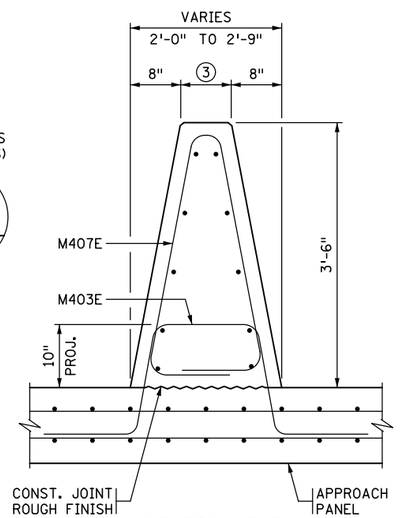

SECTION B-B
CONCRETE APPROACH ROADWAY

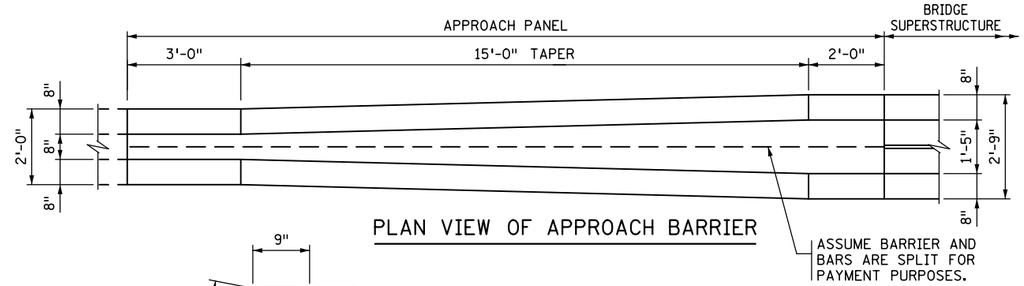

PLAN VIEW OF APPROACH BARRIER

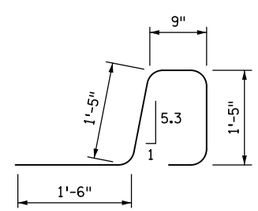

M501E

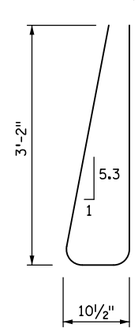

M505E

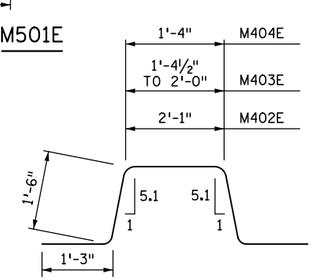

M402E, M403E, M404E

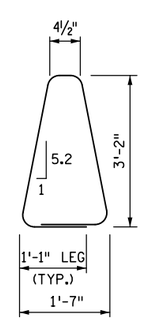

M408E

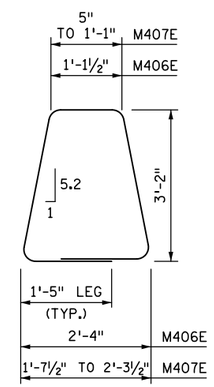

M406E, M407E

BILL OF REINFORCEMENT FOR BARRIER

BAR	NO.	LENGTH	SHAPE	LOCATION
M501E		5'-7"		BARRIER DOWEL
M402E		7'-7"		BARRIER DOWEL
M403E	SER. OF 14	6'-11" TO 7'-7"		BARRIER DOWEL
M404E		6'-11"		BARRIER DOWEL
M505E		7'-2"		BARRIER VERTICAL
M406E		10'-4"		BARRIER VERTICAL
M407E	SER. OF 14	9'-7" TO 10'-4"		BARRIER VERTICAL
M408E		8'-11"		BARRIER VERTICAL
M4__E				BARRIER LONGIT.
M4__E				BARRIER LONGIT.
M4__E				BARRIER LONGIT.
M4__E				BARRIER LONGIT.
M4__E				BARRIER LONGIT.

GENERAL NOTES

MEASURE PAYMENT LENGTH BETWEEN THE OUTSIDE ENDS OF THE BARRIER FROM THE E8 JOINT. MEASURED LENGTH IS FOR ONE SIDE OF THE SPLIT MEDIAN BARRIER.

CONCRETE BARRIER = 525 LBS./FT. (0.130 CU. YDS./FT.) PER SIDE.

FINISH ALL EDGES OF BARRIER WITH ½" CHAMFER, EXCEPT WHERE OTHERWISE NOTED.

SPACE CONTROL JOINTS AT 10 FT. MAXIMUM. REFER TO SUPERSTRUCTURE SHEET FOR SPECIFIC SPACING INFORMATION.

BARRIER QUANTITIES ARE LISTED IN SUMMARY OF QUANTITIES FOR SUPERSTRUCTURE.

① PLACE BAR ON TOP OF BOTTOM REINFORCEMENT MAT IN DECK.

② JOINT SEALANT PER MnDOT APPROVED/QUALIFIED PRODUCTS LIST - CRACK AND JOINT MATERIALS - SILICONE JOINT SEALERS.

③ VARIES FROM 8" TO 1'-5".

REVISION:

APPROVED: AUGUST 24, 2016
Kevin Western
STATE BRIDGE ENGINEER

CERTIFIED BY _____ LICENSED PROFESSIONAL ENGINEER _____ DATE
NAME: LIC. NO.

TITLE: SPLIT MEDIAN BARRIER 42" (TYPE S, TL-4)
INTEGRAL OR SEMI-INTEGRAL ABUTMENT (WITHOUT CONCRETE WEARING COURSE)

DES: DR: CHK: CHK:

SHEET NO. OF SHEETS

APPROVED:

FIG. 5-397.145(A)

BRIDGE NO.

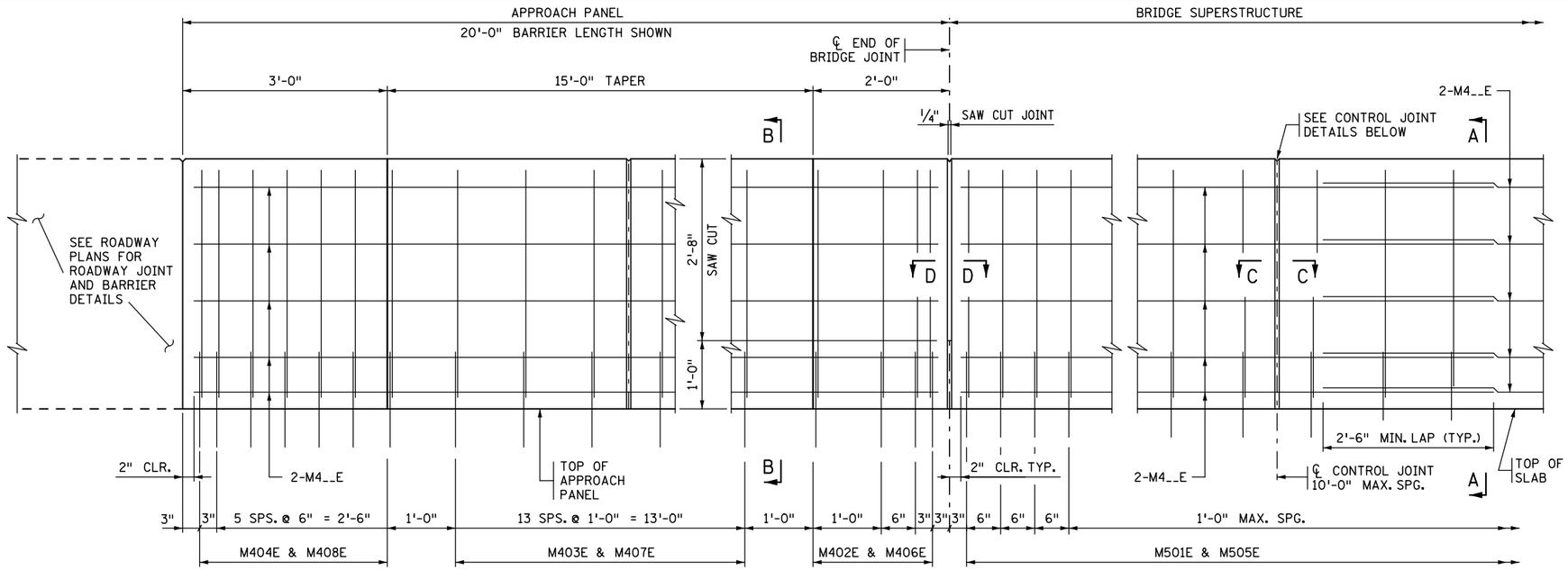

JOINT AT ABUTMENT

(INTEGRAL OR SEMI-INTEGRAL ABUTMENT)

CONTROL JOINT

INSIDE ELEVATION OF BARRIER

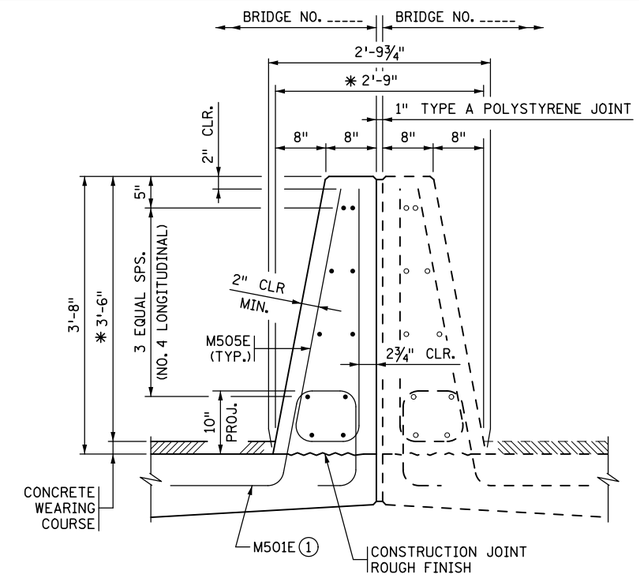

SECTION A-A

✱ DIMENSION SHOWN IS TO THE TOP OF THE WEARING COURSE AT GUTTERLINE.

DESIGNER NOTE
(REMOVE PRIOR TO PLOTTING FINAL PLAN):
VERIFY LENGTH OF BARRIER ON APPROACH PANEL WITH ROADWAY DESIGNER. REFER TO MEMO TO DESIGNERS (2016-01) FOR ADDITIONAL REQUIREMENTS REGARDING BARRIER PLACEMENT.

DESIGNER NOTE
(REMOVE PRIOR TO PLOTTING FINAL PLAN):
AVOID LAYOUTS WITH HORIZONTAL GAP BETWEEN SPLIT MEDIAN BARRIERS OF 2" TO 6", AS BARRIERS CANNOT BE SLIPFORMED. IF GAP EXCEEDS 6" CONSIDER USING STANDARD FIGURE 5-397.140 OR .141 IN LIEU OF THIS STANDARD.

BARRIER ON EACH SIDE MEETS NCHRP 350 TL-4 REQUIREMENTS ON BRIDGE DECK AND TL-3 ON APPROACH PANEL.

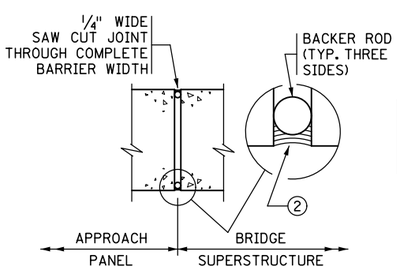

SECTION D-D

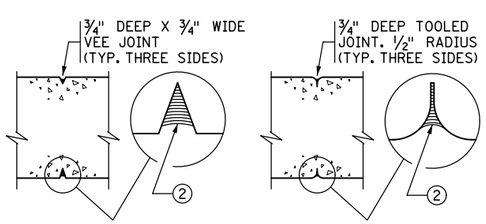

SECTION C-C
CONTRACTOR OPTION 1

SECTION C-C
CONTRACTOR OPTION 2

CONTROL JOINT DETAILS

WHEN USING SLIP FORM METHOD TO PLACE THE CONCRETE, CUT JOINT 3 INCHES DEEP USING MARGIN TROWEL OR SIMILAR MEANS IMMEDIATELY AFTER CONCRETE PLACEMENT (TYP. THREE SIDES).

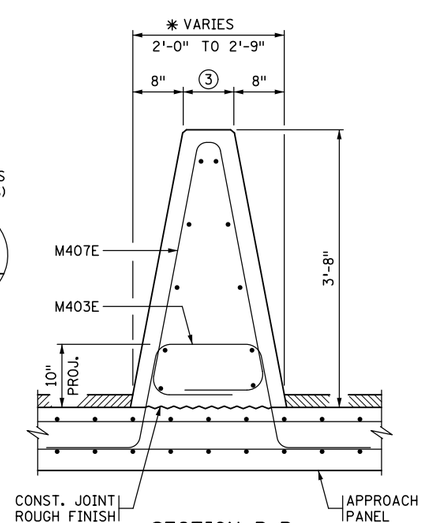

SECTION B-B

CONCRETE APPROACH ROADWAY.
✱ DIMENSION SHOWN IS TO THE TO THE WEARING COURSE AT GUTTERLINE.

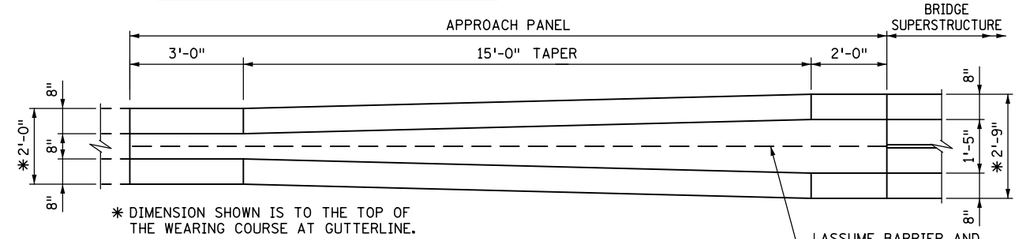

PLAN VIEW OF APPROACH BARRIER

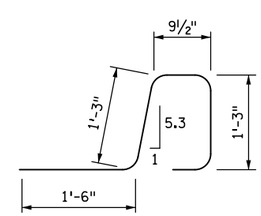

M501E

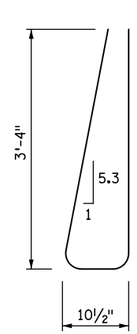

M505E

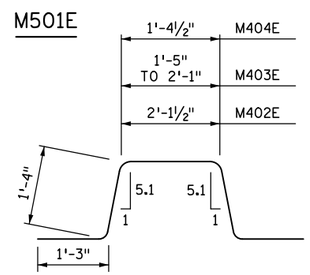

M402E, M403E, M404E

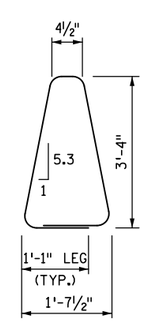

M408E

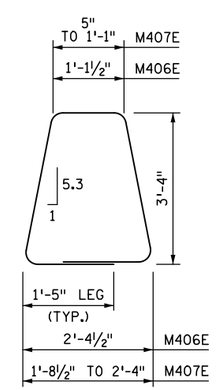

M406E, M407E

BILL OF REINFORCEMENT FOR BARRIER

BAR	NO.	LENGTH	SHAPE	LOCATION
M501E		5'-4"		BARRIER DOWEL
M402E		7'-4"		BARRIER DOWEL
M403E	SER. OF 14	6'-7" TO 7'-3"		BARRIER DOWEL
M404E		6'-7"		BARRIER DOWEL
M505E		7'-6"		BARRIER VERTICAL
M406E		10'-8"		BARRIER VERTICAL
M407E	SER. OF 14	9'-7" TO 10'-7"		BARRIER VERTICAL
M408E		8'-11"		BARRIER VERTICAL
M4__E				BARRIER LONGIT.
M4__E				BARRIER LONGIT.
M4__E				BARRIER LONGIT.
M4__E				BARRIER LONGIT.
M4__E				BARRIER LONGIT.

GENERAL NOTES

MEASURE PAYMENT LENGTH BETWEEN THE OUTSIDE ENDS OF THE BARRIER FROM THE E8 JOINT. MEASURED LENGTH IS FOR ONE SIDE OF THE SPLIT MEDIAN BARRIER.

CONCRETE BARRIER = 559 LBS./FT. (0.138 CU. YDS./FT.) PER SIDE.

FINISH ALL EDGES OF BARRIER WITH ½" CHAMFER, EXCEPT WHERE OTHERWISE NOTED.

SPACE CONTROL JOINTS AT 10 FT. MAXIMUM. REFER TO SUPERSTRUCTURE SHEET FOR SPECIFIC SPACING INFORMATION.

BARRIER QUANTITIES ARE LISTED IN SUMMARY OF QUANTITIES FOR SUPERSTRUCTURE.

① PLACE BAR ON TOP OF BOTTOM REINFORCEMENT MAT IN DECK.
② JOINT SEALANT PER MnDOT APPROVED/QUALIFIED PRODUCTS LIST - CRACK AND JOINT MATERIALS - SILICONE JOINT SEALERS.
③ VARIES FROM 8" TO 1'-5".

REVISION:

APPROVED: AUGUST 24, 2016
Kevin Western
STATE BRIDGE ENGINEER

CERTIFIED BY _____ LICENSED PROFESSIONAL ENGINEER _____ DATE
NAME: LIC. NO.

TITLE: SPLIT MEDIAN BARRIER 42" (TYPE S, TL-4)
INTEGRAL OR SEMI-INTEGRAL ABUTMENT (WITH 2" CONCRETE WEARING COURSE)

DES: DR: CHK: CHK:
SHEET NO. OF SHEETS

FIG. 5-397.145(B)

APPROVED:

BRIDGE NO.

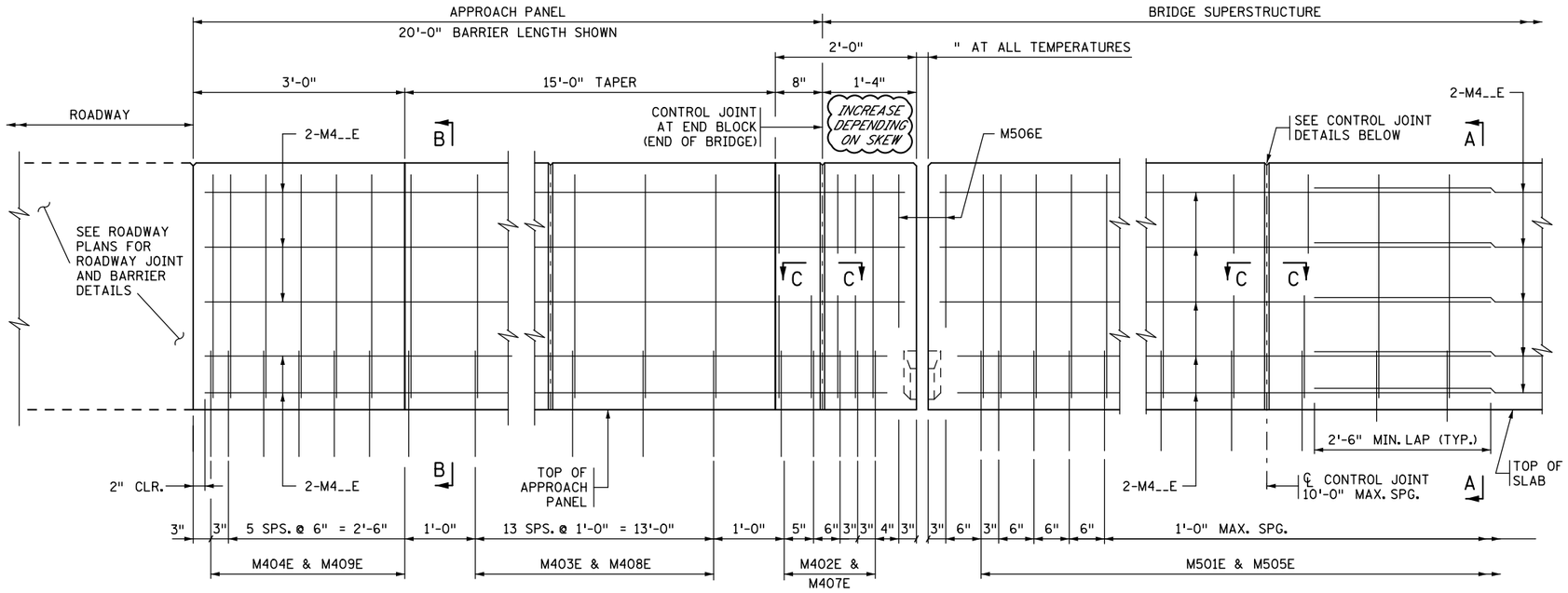

EXPANSION JOINT ④

EXPANSION DEVICE NOT SHOWN

CONTROL JOINT

INSIDE ELEVATION OF BARRIER

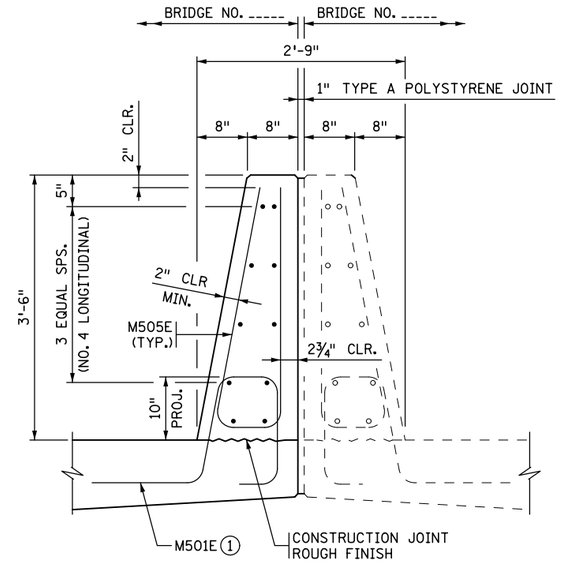

SECTION A-A

DESIGNER NOTE
(REMOVE PRIOR TO PLOTTING FINAL PLAN):
VERIFY LENGTH OF BARRIER ON APPROACH PANEL WITH ROADWAY DESIGNER. REFER TO MEMO TO DESIGNERS (2016-01) FOR ADDITIONAL REQUIREMENTS REGARDING BARRIER PLACEMENT.

DESIGNER NOTE
(REMOVE PRIOR TO PLOTTING FINAL PLAN):
AVOID LAYOUTS WITH HORIZONTAL GAP BETWEEN SPLIT MEDIAN BARRIERS OF 2" TO 6", AS BARRIERS CANNOT BE SLIPFORMED. IF GAP EXCEEDS 6" CONSIDER USING STANDARD FIGURE 5-397.140 OR .141 IN LIEU OF THIS STANDARD.

BARRIER ON EACH SIDE MEETS NCHRP 350 TL-4 REQUIREMENTS ON BRIDGE DECK AND TL-3 ON APPROACH PANEL.

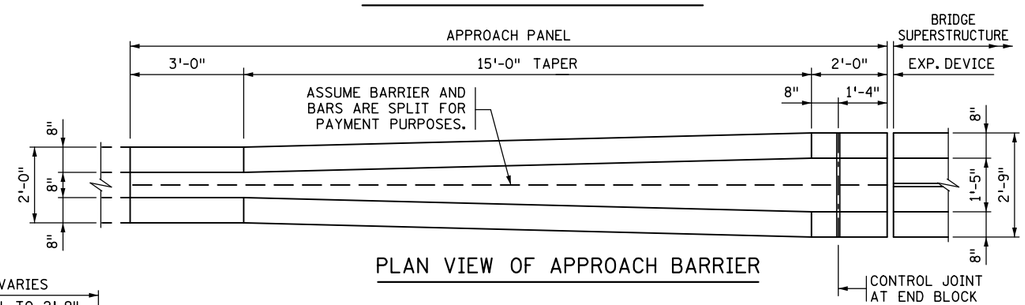

PLAN VIEW OF APPROACH BARRIER

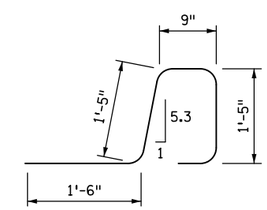

M501E

BILL OF REINFORCEMENT FOR BARRIER				
BAR	NO.	LENGTH	SHAPE	LOCATION
M501E		5'-7"		BARRIER DOWEL
M402E		7'-7"		BARRIER DOWEL
M403E	SER. OF 14	6'-11" TO 7'-7"		BARRIER DOWEL
M404E		6'-11"		BARRIER DOWEL
M505E		7'-2"		BARRIER VERTICAL
M506E		5'-0"		BARRIER VERTICAL
M407E		10'-4"		BARRIER VERTICAL
M408E	SER. OF 14	9'-7" TO 10'-4"		BARRIER VERTICAL
M409E		8'-11"		BARRIER VERTICAL
M4__E				BARRIER LONGIT.
M4__E				BARRIER LONGIT.
M4__E				BARRIER LONGIT.
M4__E				BARRIER LONGIT.
M4__E				BARRIER LONGIT.

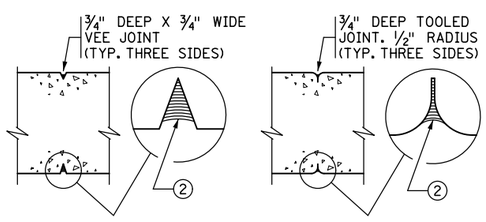

SECTION C-C
CONTRACTOR OPTION 1

SECTION C-C
CONTRACTOR OPTION 2

CONTROL JOINT DETAILS

WHEN USING SLIP FORM METHOD TO PLACE THE CONCRETE, CUT JOINT 3 INCHES DEEP USING MARGIN TROWEL OR SIMILAR MEANS IMMEDIATELY AFTER CONCRETE PLACEMENT (TYP. THREE SIDES).

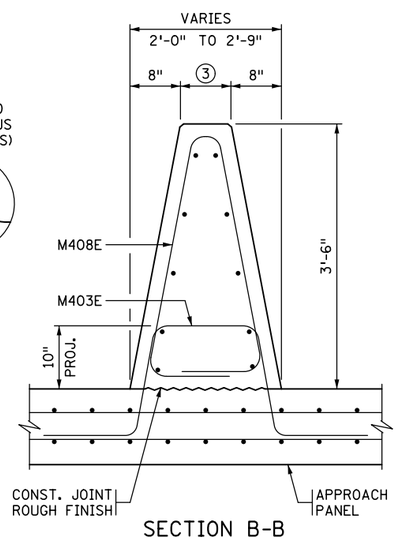

SECTION B-B
CONCRETE APPROACH ROADWAY

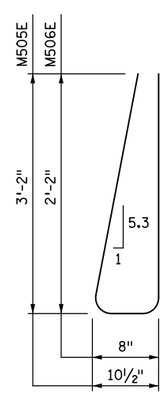

M505E, M506E

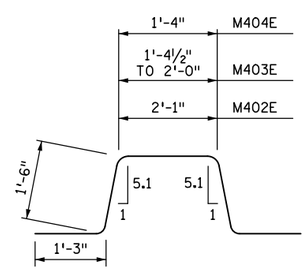

M402E, M403E, M404E

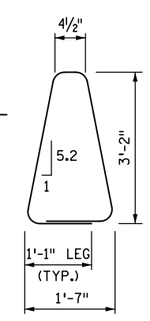

M409E

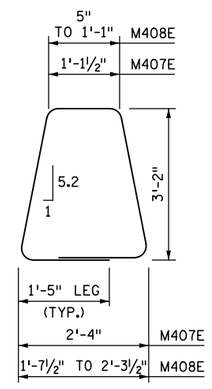

M407E, M408E

GENERAL NOTES

MEASURE PAYMENT LENGTH BETWEEN THE OUTSIDE ENDS OF THE BARRIER FROM THE E8 JOINT. MEASURED LENGTH IS FOR ONE SIDE OF THE SPLIT MEDIAN BARRIER.

CONCRETE BARRIER = 525 LBS./FT. (0.130 CU. YDS./FT.) PER SIDE.

FINISH ALL EDGES OF BARRIER WITH ½" CHAMFER, EXCEPT WHERE OTHERWISE NOTED.

SPACE CONTROL JOINTS AT 10 FT. MAXIMUM. REFER TO SUPERSTRUCTURE SHEET FOR SPECIFIC SPACING INFORMATION.

BARRIER QUANTITIES ARE LISTED IN SUMMARY OF QUANTITIES FOR SUPERSTRUCTURE.

① PLACE BAR ON TOP OF BOTTOM REINFORCEMENT MAT IN DECK.

② JOINT SEALANT PER MnDOT APPROVED/QUALIFIED PRODUCTS LIST - CRACK AND JOINT MATERIALS - SILICONE JOINT SEALERS.

③ VARIES FROM 8" TO 1'-5".

④ REFER TO "WATERPROOF EXPANSION DEVICE" STANDARD PLANS FOR COVER PLATE DETAILS.

FIG. 5-397.145(C)

REVISION:

APPROVED: AUGUST 24, 2016
Kevin Western
STATE BRIDGE ENGINEER

CERTIFIED BY _____ LICENSED PROFESSIONAL ENGINEER _____ DATE
NAME: LIC. NO.

TITLE: SPLIT MEDIAN BARRIER 42" (TYPE S, TL-4)
PARAPET ABUTMENT
(WITHOUT CONCRETE WEARING COURSE)

DES: DR: CHK: CHK:

APPROVED:

BRIDGE NO.

SHEET NO. OF SHEETS

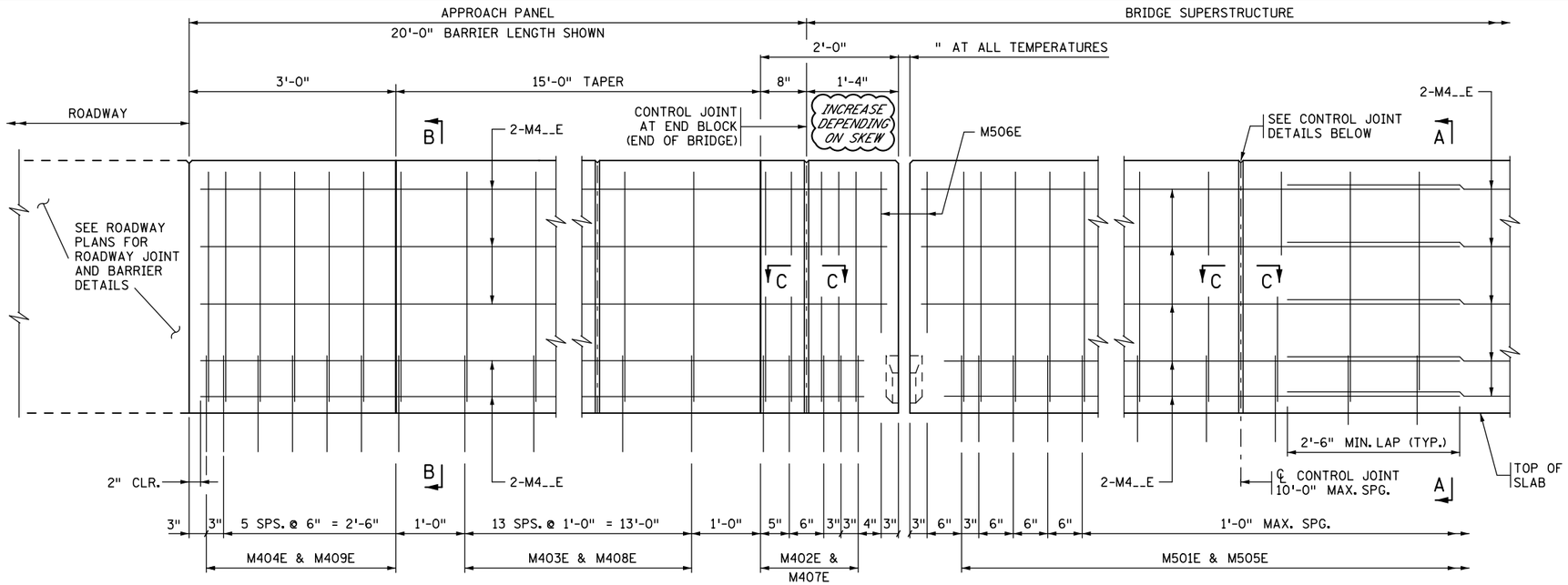

EXPANSION JOINT ④ CONTROL JOINT

EXPANSION DEVICE NOT SHOWN

INSIDE ELEVATION OF BARRIER

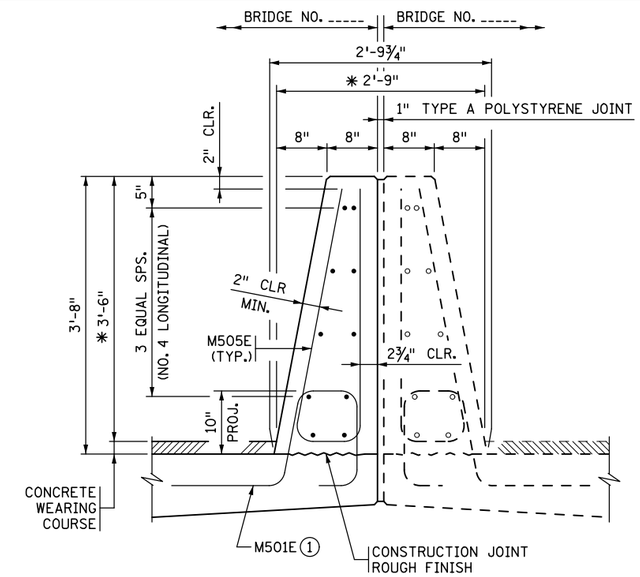

SECTION A-A

✱ DIMENSION SHOWN IS TO THE TOP OF THE WEARING COURSE AT GUTTERLINE.

DESIGNER NOTE
(REMOVE PRIOR TO PLOTTING FINAL PLAN):
VERIFY LENGTH OF BARRIER ON APPROACH PANEL WITH ROADWAY DESIGNER. REFER TO MEMO TO DESIGNERS (2016-01) FOR ADDITIONAL REQUIREMENTS REGARDING BARRIER PLACEMENT.

DESIGNER NOTE
(REMOVE PRIOR TO PLOTTING FINAL PLAN):
AVOID LAYOUTS WITH HORIZONTAL GAP BETWEEN SPLIT MEDIAN BARRIERS OF 2" TO 6", AS BARRIERS CANNOT BE SLIPFORMED. IF GAP EXCEEDS 6" CONSIDER USING STANDARD FIGURE 5-397.140 OR .141 IN LIEU OF THIS STANDARD.

BARRIER ON EACH SIDE MEETS NCHRP 350 TL-4 REQUIREMENTS ON BRIDGE DECK AND TL-3 ON APPROACH PANEL.

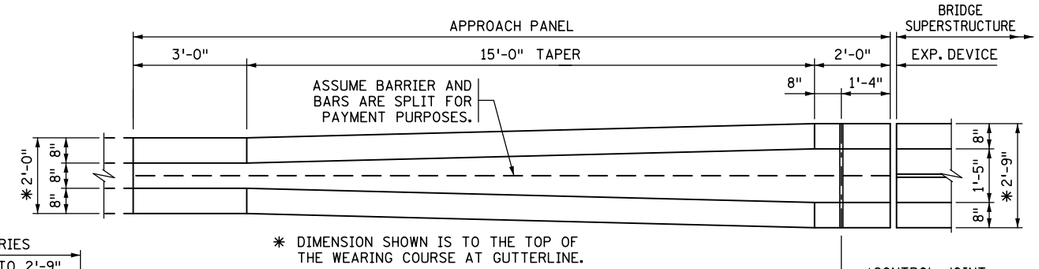

✱ DIMENSION SHOWN IS TO THE TOP OF THE WEARING COURSE AT GUTTERLINE.

PLAN VIEW OF APPROACH BARRIER

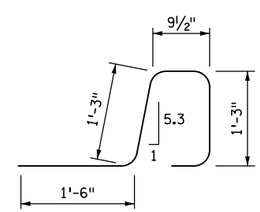

M501E

BILL OF REINFORCEMENT FOR BARRIER				
BAR	NO.	LENGTH	SHAPE	LOCATION
M501E		5'-4"		BARRIER DOWEL
M402E		7'-4"		BARRIER DOWEL
M403E	SER. OF 14	6'-7" TO 7'-3"		BARRIER DOWEL
M404E		6'-7"		BARRIER DOWEL
M505E		7'-6"		BARRIER VERTICAL
M506E		5'-3"		BARRIER VERTICAL
M407E		10'-8"		BARRIER VERTICAL
M408E	SER. OF 14	9'-7" TO 10'-7"		BARRIER VERTICAL
M409E		8'-11"		BARRIER VERTICAL
M4__E				BARRIER LONGIT.
M4__E				BARRIER LONGIT.
M4__E				BARRIER LONGIT.
M4__E				BARRIER LONGIT.

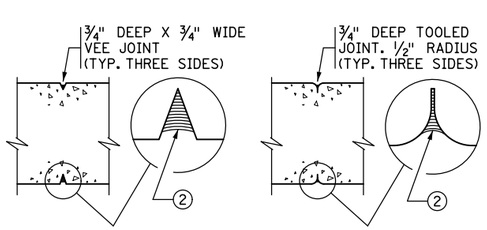

SECTION C-C
CONTRACTOR OPTION 1

SECTION C-C
CONTRACTOR OPTION 2

CONTROL JOINT DETAILS

WHEN USING SLIP FORM METHOD TO PLACE THE CONCRETE, CUT JOINT 3 INCHES DEEP USING MARGIN TROWEL OR SIMILAR MEANS IMMEDIATELY AFTER CONCRETE PLACEMENT (TYP. THREE SIDES).

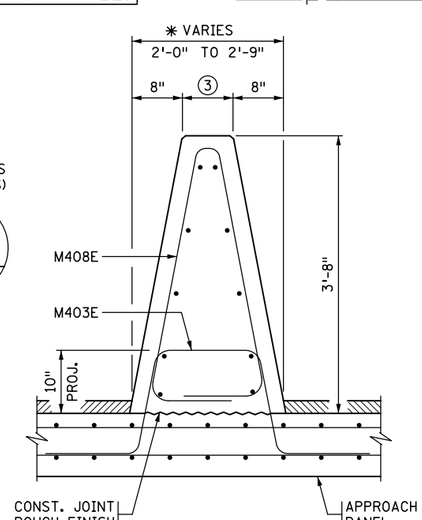

SECTION B-B

CONCRETE APPROACH ROADWAY
✱ DIMENSION SHOWN IS TO THE TOP OF THE WEARING COURSE AT GUTTERLINE.

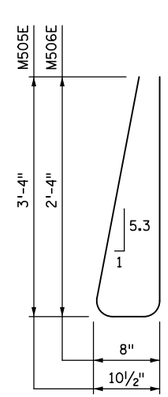

M505E, M506E

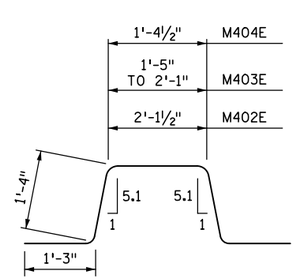

M402E, M403E, M404E

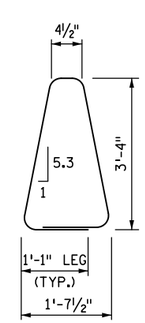

M409E

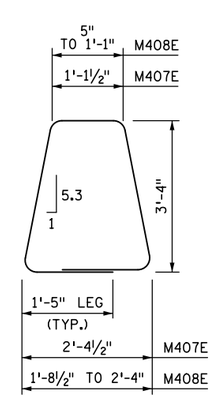

M407E, M408E

GENERAL NOTES

MEASURE PAYMENT LENGTH BETWEEN THE OUTSIDE ENDS OF THE BARRIER FROM THE E8 JOINT. MEASURED LENGTH IS FOR ONE SIDE OF THE SPLIT MEDIAN BARRIER.

CONCRETE BARRIER = 559 LBS./FT. (0.138 CU. YDS./FT.) PER SIDE.

FINISH ALL EDGES OF BARRIER WITH ½" CHAMFER, EXCEPT WHERE OTHERWISE NOTED.

SPACE CONTROL JOINTS AT 10 FT. MAXIMUM. REFER TO SUPERSTRUCTURE SHEET FOR SPECIFIC SPACING INFORMATION.

BARRIER QUANTITIES ARE LISTED IN SUMMARY OF QUANTITIES FOR SUPERSTRUCTURE.

① PLACE BAR ON TOP OF BOTTOM REINFORCEMENT MAT IN DECK.

② JOINT SEALANT PER MnDOT APPROVED/QUALIFIED PRODUCTS LIST - CRACK AND JOINT MATERIALS - SILICONE JOINT SEALERS.

③ VARIES FROM 8" TO 1'-5".

④ REFER TO "WATERPROOF EXPANSION DEVICE" STANDARD PLANS FOR COVER PLATE DETAILS.

REVISION:

APPROVED: AUGUST 24, 2016
Kevin Western
STATE BRIDGE ENGINEER

CERTIFIED BY _____ LICENSED PROFESSIONAL ENGINEER _____ DATE
NAME: LIC. NO.

TITLE: SPLIT MEDIAN BARRIER 42" (TYPE S, TL-4)
PARAPET ABUTMENT
(WITH 2" CONCRETE WEARING COURSE)

DES: DR:
CHK: CHK:
SHEET NO. OF SHEETS

APPROVED:

FIG. 5-397.145(D)

BRIDGE NO.

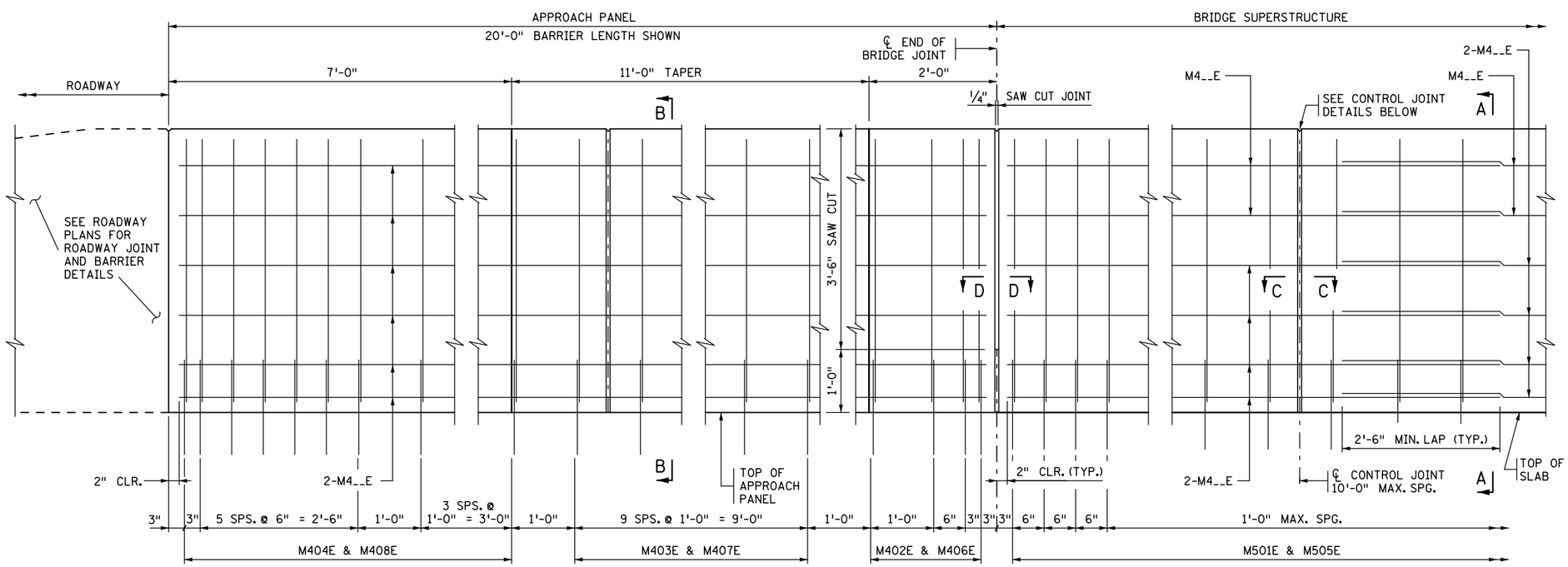

JOINT AT ABUTMENT

(INTEGRAL OR SEMI-INTEGRAL ABUTMENT)

CONTROL JOINT

INSIDE ELEVATION OF BARRIER

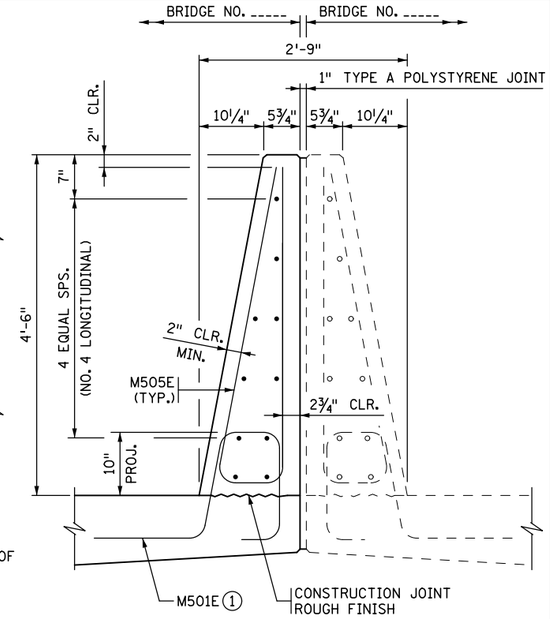

SECTION A-A

DESIGNER NOTE
(REMOVE PRIOR TO PLOTTING FINAL PLAN):
VERIFY LENGTH OF BARRIER ON APPROACH PANEL WITH ROADWAY DESIGNER. REFER TO MEMO TO DESIGNERS (2016-01) FOR ADDITIONAL REQUIREMENTS REGARDING BARRIER PLACEMENT.

DESIGNER NOTE
(REMOVE PRIOR TO PLOTTING FINAL PLAN):
AVOID LAYOUTS WITH HORIZONTAL GAP BETWEEN SPLIT MEDIAN BARRIERS OF 2" TO 6", AS BARRIERS CANNOT BE SLIPFORMED. IF GAP EXCEEDS 6" CONSIDER USING STANDARD FIGURE 5-.397-142 OR .143 IN LIEU OF THIS STANDARD.

BARRIER ON EACH SIDE MEETS NCHRP 350 TL-4 REQUIREMENTS ON BRIDGE DECK AND TL-3 ON APPROACH PANEL.

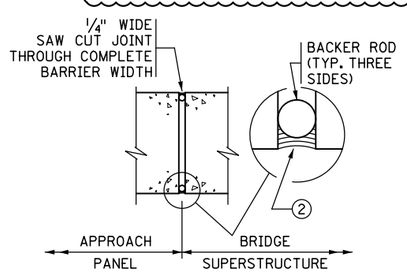

SECTION D-D

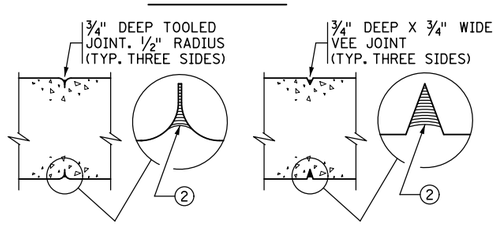

SECTION C-C
CONTRACTOR OPTION 2

SECTION C-C
CONTRACTOR OPTION 1

CONTROL JOINT DETAILS

WHEN USING SLIP FORM METHOD TO PLACE THE CONCRETE, CUT JOINT 3 INCHES DEEP USING MARGIN TROWEL OR SIMILAR MEANS IMMEDIATELY AFTER CONCRETE PLACEMENT (TYP. THREE SIDES).

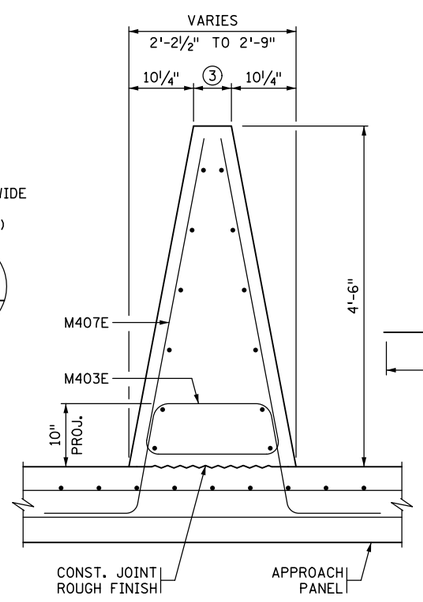

SECTION B-B
CONCRETE APPROACH ROADWAY

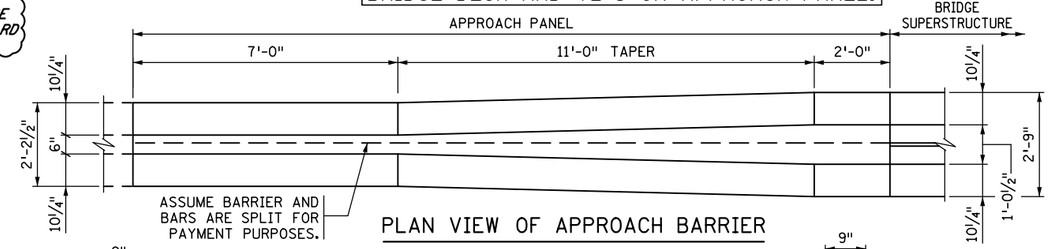

PLAN VIEW OF APPROACH BARRIER

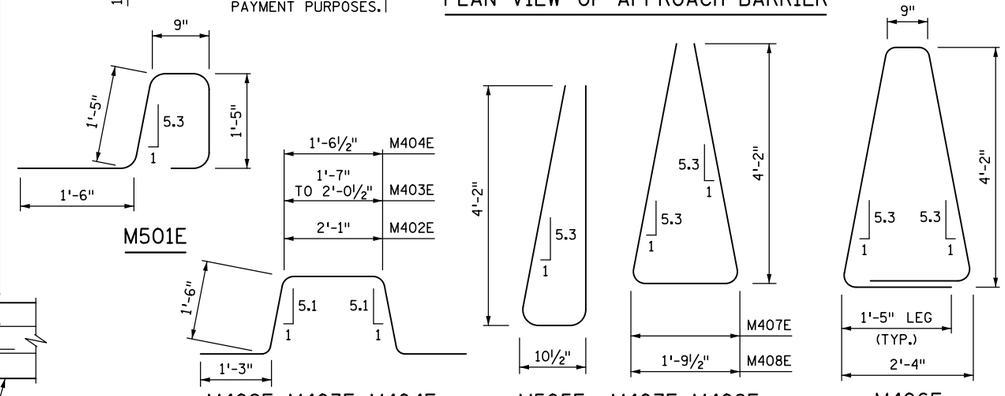

BILL OF REINFORCEMENT FOR BARRIER				
BAR	NO.	LENGTH	SHAPE	LOCATION
M501E		5'-7"		BARRIER DOWEL
M402E		7'-8"		BARRIER DOWEL
M403E	SER. OF 10	7'-2" TO 7'-7"		BARRIER DOWEL
M404E		7'-1"		BARRIER DOWEL
M505E		9'-2"		BARRIER VERTICAL
M406E		11'-11"		BARRIER VERTICAL
M407E	SER. OF 10	10'-2" TO 10'-7"		BARRIER VERTICAL
M408E		10'-1"		BARRIER VERTICAL
M4__E				BARRIER LONGIT.
M4__E				BARRIER LONGIT.
M4__E				BARRIER LONGIT.
M4__E				BARRIER LONGIT.
M4__E				BARRIER LONGIT.

GENERAL NOTES

MEASURE PAYMENT LENGTH BETWEEN THE OUTSIDE ENDS OF THE BARRIER FROM THE E8 JOINT. MEASURED LENGTH IS FOR ONE SIDE OF THE SPLIT MEDIAN BARRIER.

CONCRETE BARRIER = 612 LBS./FT. (0.151 CU. YDS./FT.) PER SIDE.

FINISH ALL EDGES OF BARRIER WITH 1/2" CHAMFER, EXCEPT WHERE OTHERWISE NOTED.

SPACE CONTROL JOINTS AT 10 FT. MAXIMUM. REFER TO SUPERSTRUCTURE SHEET FOR SPECIFIC SPACING INFORMATION.

BARRIER QUANTITIES ARE LISTED IN SUMMARY OF QUANTITIES FOR SUPERSTRUCTURE.

① PLACE BAR ON TOP OF BOTTOM REINFORCEMENT MAT IN DECK.

② JOINT SEALANT PER MnDOT APPROVED/QUALIFIED PRODUCTS LIST - CRACK AND JOINT MATERIALS - SILICONE JOINT SEALERS.

③ VARIES FROM 6" TO 1'-0 1/2".

REVISION:

APPROVED: AUGUST 24, 2016
Kevin Western
STATE BRIDGE ENGINEER

CERTIFIED BY _____ LICENSED PROFESSIONAL ENGINEER _____ DATE
NAME: LIC. NO.

TITLE: SPLIT MEDIAN BARRIER 54" (TYPE S, TL-4)
INTEGRAL OR SEMI-INTEGRAL ABUTMENT (WITHOUT CONCRETE WEARING COURSE)

DES: DR: CHK: CHK:
SHEET NO. OF SHEETS

APPROVED:

FIG. 5-397.146(A)

BRIDGE NO.

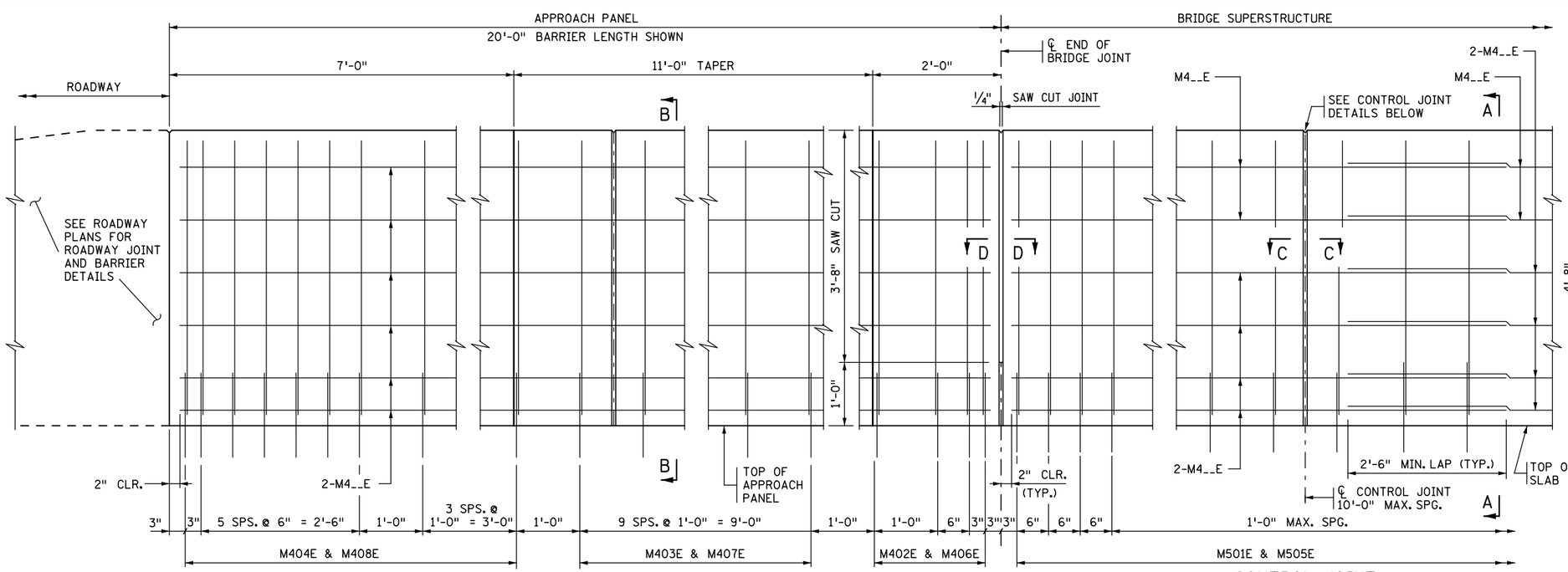

JOINT AT ABUTMENT

(INTEGRAL OR SEMI-INTEGRAL ABUTMENT)

CONTROL JOINT

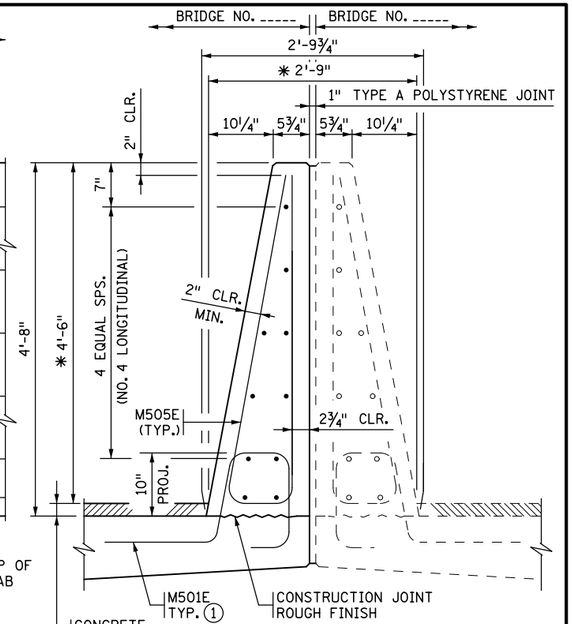

SECTION A-A

✱ DIMENSION SHOWN IS TO THE TOP OF THE WEARING COURSE AT GUTTERLINE.

DESIGNER NOTE
(REMOVE PRIOR TO PLOTTING FINAL PLAN):
VERIFY LENGTH OF BARRIER ON APPROACH PANEL WITH ROADWAY DESIGNER. REFER TO MEMO TO DESIGNERS (2016-01) FOR ADDITIONAL REQUIREMENTS REGARDING BARRIER PLACEMENT.

DESIGNER NOTE
(REMOVE PRIOR TO PLOTTING FINAL PLAN):
AVOID LAYOUTS WITH HORIZONTAL GAP BETWEEN SPLIT MEDIAN BARRIERS OF 2" TO 6", AS BARRIERS CANNOT BE SLIPFORMED. IF GAP EXCEEDS 6" CONSIDER USING STANDARD FIGURE 5-397.142 OR .143 IN LIEU OF THIS STANDARD.

BARRIER ON EACH SIDE MEETS NCHRP 350 TL-4 REQUIREMENTS ON BRIDGE DECK AND TL-3 ON APPROACH PANEL.

INSIDE ELEVATION OF BARRIER

CONCRETE WEARING COURSE NOT SHOWN

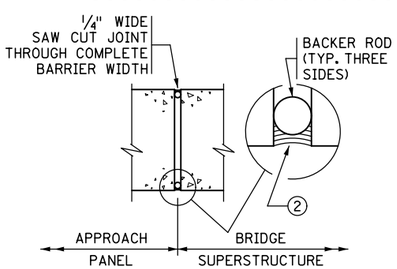

SECTION D-D

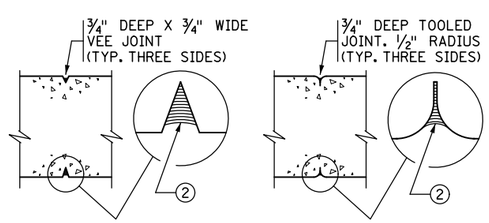

SECTION C-C
CONTRACTOR OPTION 1

SECTION C-C
CONTRACTOR OPTION 2

CONTROL JOINT DETAILS

WHEN USING SLIP FORM METHOD TO PLACE THE CONCRETE, CUT JOINT 3 INCHES DEEP USING MARGIN TROWEL OR SIMILAR MEANS IMMEDIATELY AFTER CONCRETE PLACEMENT (TYP. THREE SIDES).

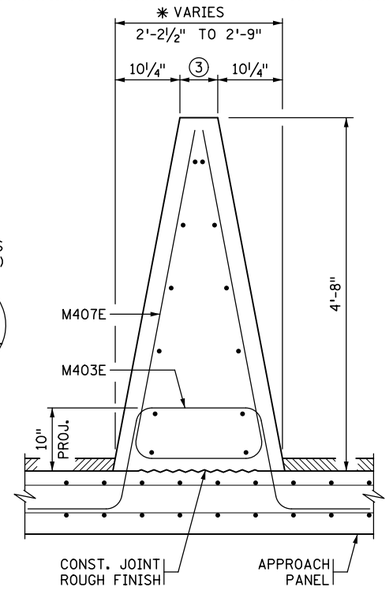

SECTION B-B

CONCRETE APPROACH ROADWAY.
✱ DIMENSION SHOWN IS TO THE TOP OF THE WEARING COURSE AT GUTTERLINE.

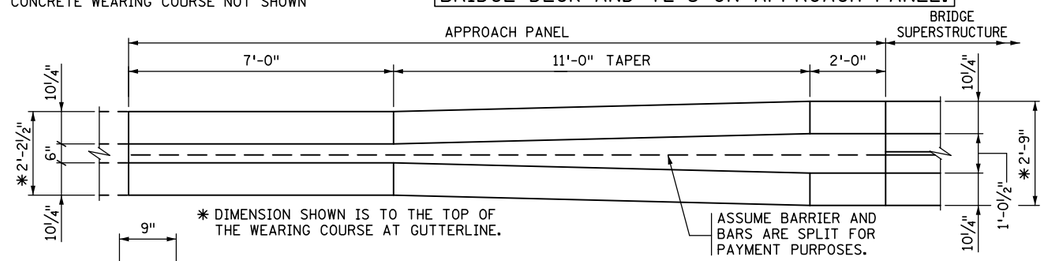

PLAN VIEW OF APPROACH BARRIER

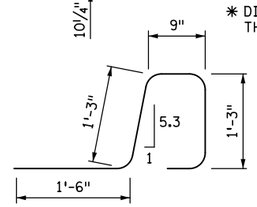

M501E

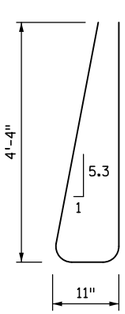

M505E

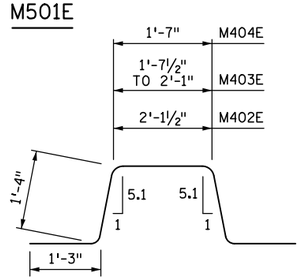

M402E, M403E, M404E

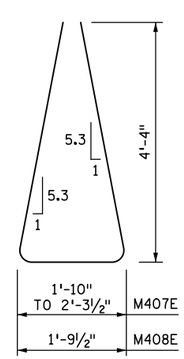

M407E, M408E

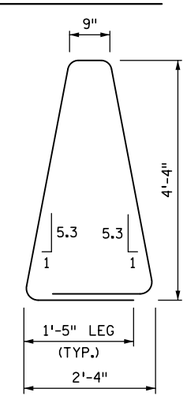

M406E

BILL OF REINFORCEMENT FOR BARRIER

BAR	NO.	LENGTH	SHAPE	LOCATION
M501E		5'-3"		BARRIER DOWEL
M402E		7'-4"		BARRIER DOWEL
M403E	SER. OF 10	6'-10" TO 7'-2"		BARRIER DOWEL
M404E		6'-9"		BARRIER DOWEL
M505E		9'-7"		BARRIER VERTICAL
M406E		12'-3"		BARRIER VERTICAL
M407E	SER. OF 10	10'-6" TO 10'-11"		BARRIER VERTICAL
M408E		10'-5"		BARRIER VERTICAL
M4__E				BARRIER LONGIT.
M4__E				BARRIER LONGIT.
M4__E				BARRIER LONGIT.
M4__E				BARRIER LONGIT.
M4__E				BARRIER LONGIT.

GENERAL NOTES

MEASURE PAYMENT LENGTH BETWEEN THE OUTSIDE ENDS OF THE BARRIER FROM THE E8 JOINT. MEASURED LENGTH IS FOR ONE SIDE OF THE SPLIT MEDIAN BARRIER..

CONCRETE BARRIER = 646 LBS./FT. (0.160 CU. YDS./FT.) PER SIDE.

FINISH ALL EDGES OF BARRIER WITH ½" CHAMFER, EXCEPT WHERE OTHERWISE NOTED.

SPACE CONTROL JOINTS AT 10 FT. MAXIMUM. REFER TO SUPERSTRUCTURE SHEET FOR SPECIFIC SPACING INFORMATION.

BARRIER QUANTITIES ARE LISTED IN SUMMARY OF QUANTITIES FOR SUPERSTRUCTURE.

① PLACE BAR ON TOP OF BOTTOM REINFORCEMENT MAT IN DECK.
② JOINT SEALANT PER MnDOT APPROVED/QUALIFIED PRODUCTS LIST - CRACK AND JOINT MATERIALS - SILICONE JOINT SEALERS.
③ VARIES FROM 6" TO 1'-0½".

REVISION:

APPROVED: AUGUST 24, 2016
Kevin Western
STATE BRIDGE ENGINEER

CERTIFIED BY _____ LICENSED PROFESSIONAL ENGINEER _____ DATE
NAME: LIC. NO.

TITLE: SPLIT MEDIAN BARRIER 54" (TYPE S, TL-4)
INTEGRAL OR SEMI-INTEGRAL ABUTMENT (WITH 2" CONCRETE WEARING COURSE)

DES: DR: CHK: CHK:
SHEET NO. OF SHEETS

FIG. 5-397.146(B)
APPROVED:
BRIDGE NO.

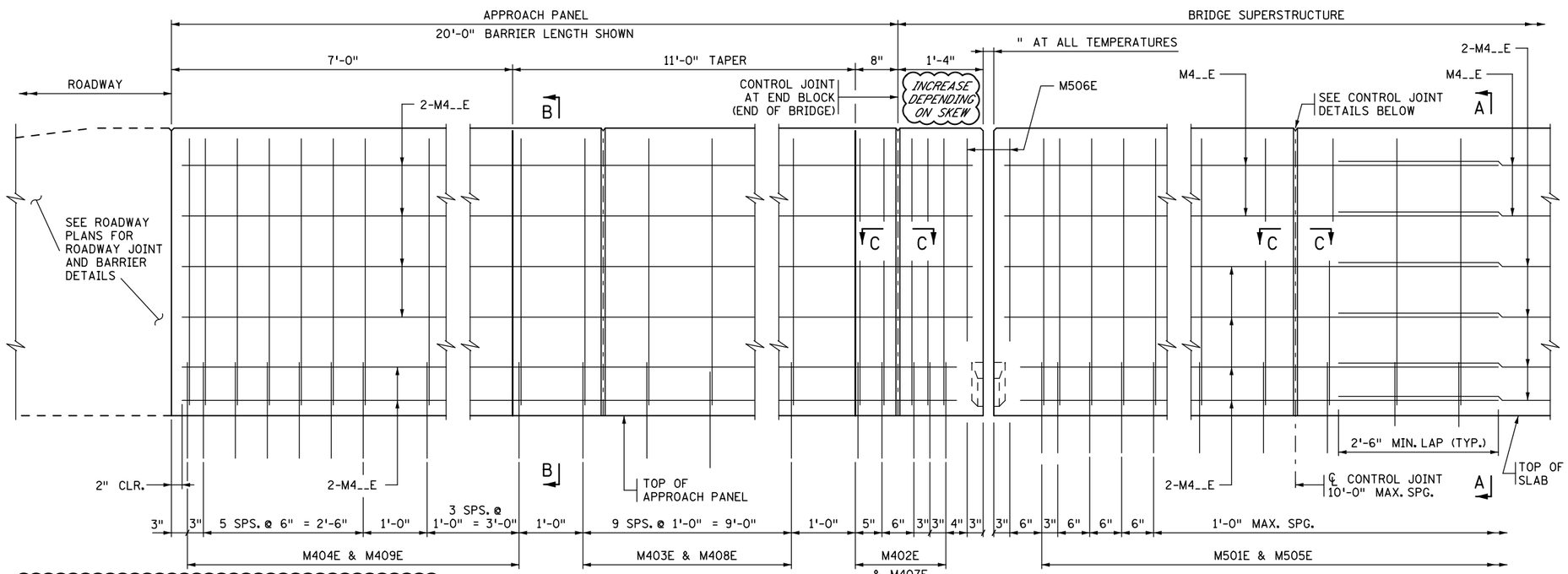

JOINT AT ABUTMENT ④

(INTEGRAL OR SEMI-INTEGRAL ABUTMENT)

CONTROL JOINT

INSIDE ELEVATION OF BARRIER

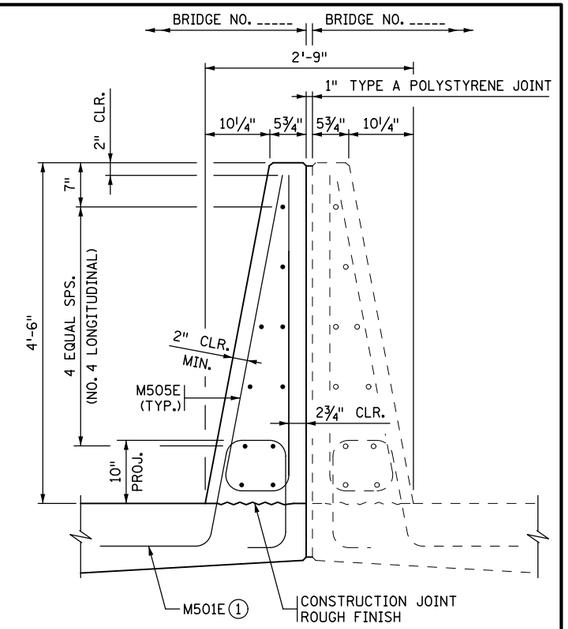

SECTION A-A

BILL OF REINFORCEMENT FOR BARRIER				
BAR	NO.	LENGTH	SHAPE	LOCATION
M501E		5'-7"		BARRIER DOWEL
M402E	4	7'-8"		BARRIER DOWEL
M403E	SER. OF 10	7'-2" TO 7'-7"		BARRIER DOWEL
M404E		7'-1"		BARRIER DOWEL
M505E		9'-2"		BARRIER VERTICAL
M506E		7'-0"		BARRIER VERTICAL
M407E		11'-11"		BARRIER VERTICAL
M408E	SER. OF 10	10'-2" TO 10'-7"		BARRIER VERTICAL
M409E		10'-1"		BARRIER VERTICAL
M4__E				BARRIER LONGIT.
M4__E				BARRIER LONGIT.
M4__E				BARRIER LONGIT.
M4__E				BARRIER LONGIT.
M4__E				BARRIER LONGIT.

DESIGNER NOTE
(REMOVE PRIOR TO PLOTTING FINAL PLAN):
VERIFY LENGTH OF BARRIER ON APPROACH PANEL WITH ROADWAY DESIGNER. REFER TO MEMO TO DESIGNERS (2016-01) FOR ADDITIONAL REQUIREMENTS REGARDING BARRIER PLACEMENT.

DESIGNER NOTE
(REMOVE PRIOR TO PLOTTING FINAL PLAN):
AVOID LAYOUTS WITH HORIZONTAL GAP BETWEEN SPLIT MEDIAN BARRIERS OF 2" TO 6", AS BARRIERS CANNOT BE SLIPFORMED. IF GAP EXCEEDS 6" CONSIDER USING STANDARD FIGURE 5-.397-142 OR .143 IN LIEU OF THIS STANDARD.

BARRIER ON EACH SIDE MEETS NCHRP 350 TL-4 REQUIREMENTS ON BRIDGE DECK AND TL-3 ON APPROACH PANEL.

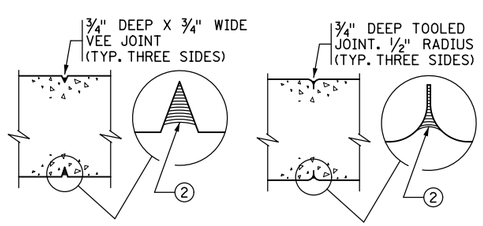

SECTION C-C
CONTRACTOR OPTION 1

SECTION C-C
CONTRACTOR OPTION 2

CONTROL JOINT DETAILS

WHEN USING SLIP FORM METHOD TO PLACE THE CONCRETE, CUT JOINT 3 INCHES DEEP USING MARGIN TROWEL OR SIMILAR MEANS IMMEDIATELY AFTER CONCRETE PLACEMENT (TYP. THREE SIDES).

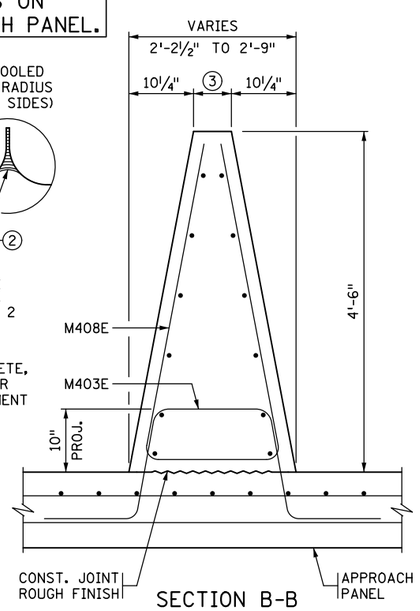

SECTION B-B
CONCRETE APPROACH ROADWAY

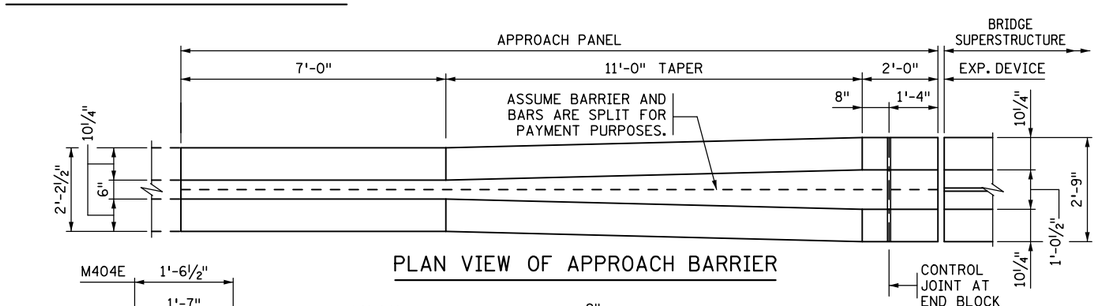

PLAN VIEW OF APPROACH BARRIER

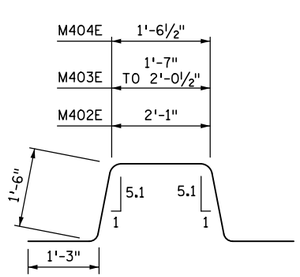

M402E, M403E, M404E

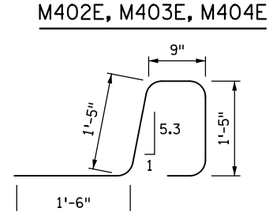

M501E

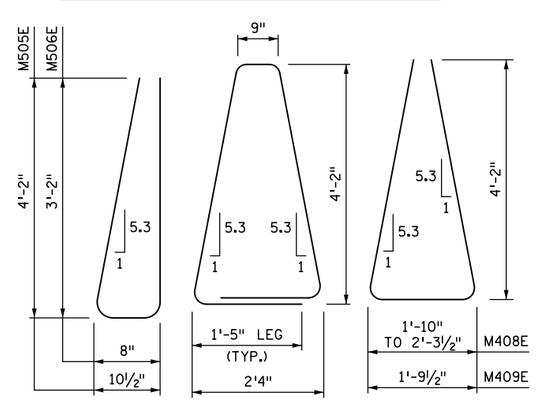

M505E, M506E M407E M408E, M409E

GENERAL NOTES

MEASURE PAYMENT LENGTH BETWEEN THE OUTSIDE ENDS OF THE BARRIER FROM THE E8 JOINT. MEASURED LENGTH IS FOR ONE SIDE OF THE SPLIT MEDIAN BARRIER.

CONCRETE BARRIER = 612 LBS./FT. (0.151 CU. YDS./FT.) PER SIDE.

FINISH ALL EDGES OF BARRIER WITH ½" CHAMFER, EXCEPT WHERE OTHERWISE NOTED.

SPACE CONTROL JOINTS AT 10 FT. MAXIMUM. REFER TO SUPERSTRUCTURE SHEET FOR SPECIFIC SPACING INFORMATION.

BARRIER QUANTITIES ARE LISTED IN SUMMARY OF QUANTITIES FOR SUPERSTRUCTURE.

① PLACE BAR ON TOP OF BOTTOM REINFORCEMENT MAT IN DECK.

② JOINT SEALANT PER MnDOT APPROVED/QUALIFIED PRODUCTS LIST - CRACK AND JOINT MATERIALS - SILICONE JOINT SEALERS.

③ VARIES FROM 6" TO 1'-0½".

④ REFER TO "WATERPROOF EXPANSION DEVICE" STANDARD PLANS FOR COVER PLATE DETAILS.

REVISION:

APPROVED: AUGUST 24, 2016
Kevin Western
STATE BRIDGE ENGINEER

CERTIFIED BY _____ LICENSED PROFESSIONAL ENGINEER _____ DATE
NAME: LIC. NO.

TITLE: SPLIT MEDIAN BARRIER 54" (TYPE S, TL-4)
PARAPET ABUTMENT
(WITHOUT CONCRETE WEARING COURSE)

DES: DR:
CHK: CHK:
SHEET NO. OF SHEETS

APPROVED:

FIG. 5-397.146(C)

BRIDGE NO.

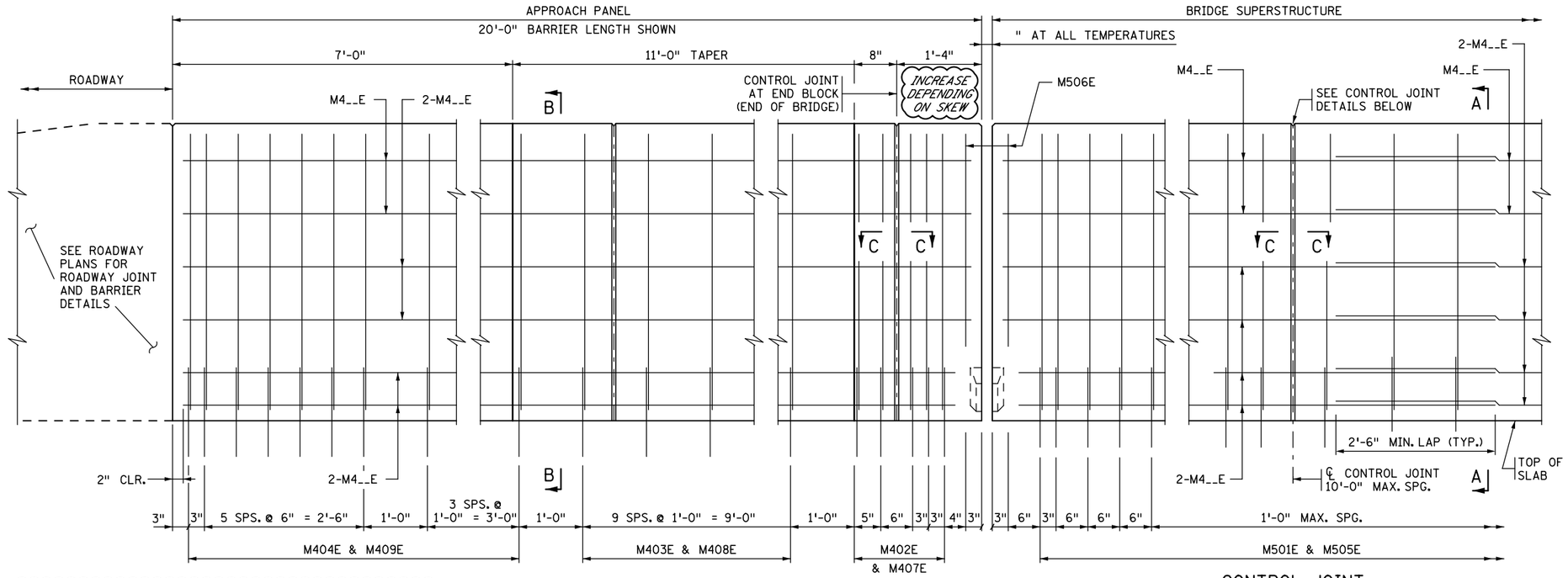

JOINT AT ABUTMENT ④

(INTEGRAL OR SEMI-INTEGRAL ABUTMENT)

INSIDE ELEVATION OF BARRIER

CONTROL JOINT

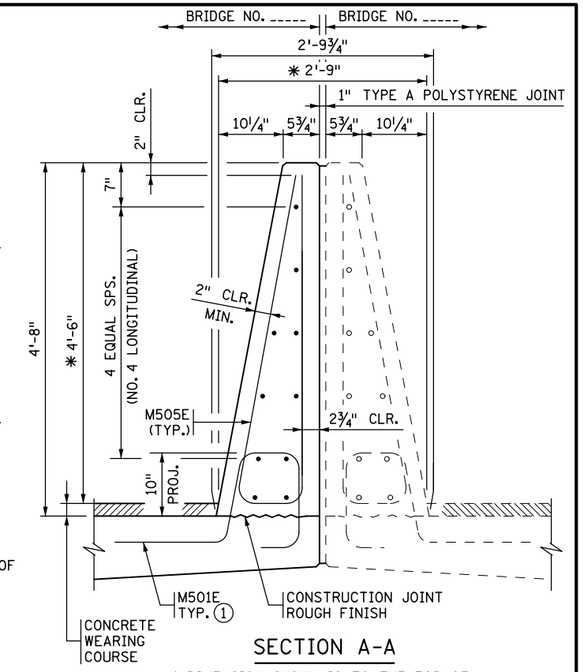

SECTION A-A

✱ DIMENSION SHOWN IS TO THE TOP OF THE WEARING COURSE AT GUTTERLINE.

DESIGNER NOTE
(REMOVE PRIOR TO PLOTTING FINAL PLAN):
VERIFY LENGTH OF BARRIER ON APPROACH PANEL WITH ROADWAY DESIGNER. REFER TO MEMO TO DESIGNERS (2016-01) FOR ADDITIONAL REQUIREMENTS REGARDING BARRIER PLACEMENT.

DESIGNER NOTE
(REMOVE PRIOR TO PLOTTING FINAL PLAN):
AVOID LAYOUTS WITH HORIZONTAL GAP BETWEEN SPLIT MEDIAN BARRIERS OF 2" TO 6", AS BARRIERS CANNOT BE SLIPFORMED. IF GAP EXCEEDS 6" CONSIDER USING STANDARD FIGURE 5-.397-142 OR .143 IN LIEU OF THIS STANDARD.

BARRIER ON EACH SIDE MEETS NCHRP 350 TL-4 REQUIREMENTS ON BRIDGE DECK AND TL-3 ON APPROACH PANEL.

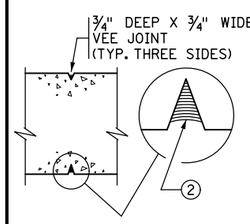

SECTION C-C

CONTRACTOR OPTION 1

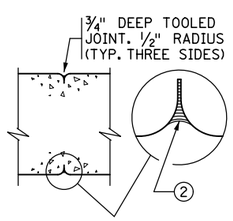

SECTION C-C

CONTRACTOR OPTION 2

CONTROL JOINT DETAILS

WHEN USING SLIP FORM METHOD TO PLACE THE CONCRETE, CUT JOINT 3 INCHES DEEP USING MARGIN TROWEL OR SIMILAR MEANS IMMEDIATELY AFTER CONCRETE PLACEMENT (TYP. THREE SIDES).

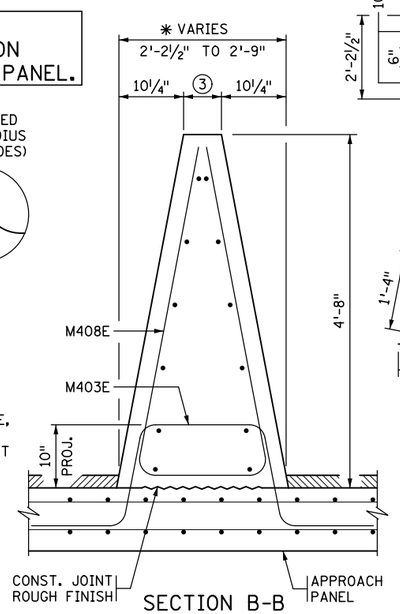

SECTION B-B

CONCRETE APPROACH ROADWAY.
✱ DIMENSION SHOWN IS TO THE TOP OF THE WEARING COURSE AT GUTTERLINE.

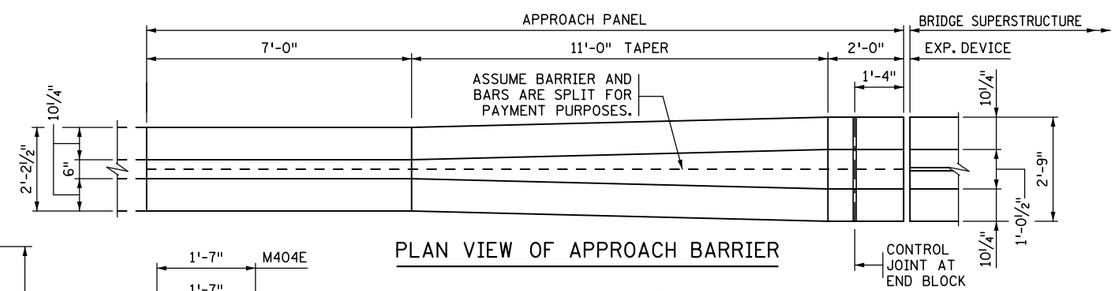

PLAN VIEW OF APPROACH BARRIER

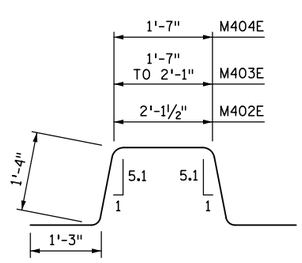

M402E, M403E, M404E

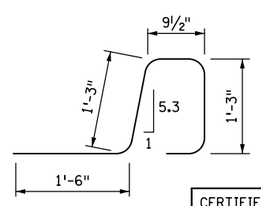

M501E

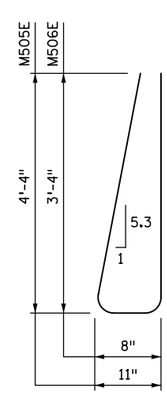

M505E, M506E

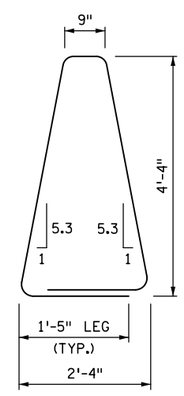

M407E

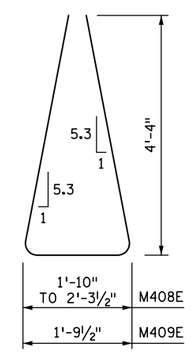

M408E, M409E

BILL OF REINFORCEMENT FOR BARRIER

BAR	NO.	LENGTH	SHAPE	LOCATION
M501E		5'-3"		BARRIER DOWEL
M402E		7'-4"		BARRIER DOWEL
M403E	SER. OF 10	6'-10" TO 7'-2"		BARRIER DOWEL
M404E		6'-9"		BARRIER DOWEL
M505E		9'-7"		BARRIER VERTICAL
M506E		7'-4"		BARRIER VERTICAL
M407E		12'-3"		BARRIER VERTICAL
M408E	SER. OF 10	10'-6" TO 10'-11"		BARRIER VERTICAL
M409E		10'-5"		BARRIER VERTICAL
M4__E				BARRIER LONGIT.
M4__E				BARRIER LONGIT.
M4__E				BARRIER LONGIT.
M4__E				BARRIER LONGIT.
M4__E				BARRIER LONGIT.

GENERAL NOTES

MEASURE PAYMENT LENGTH BETWEEN THE OUTSIDE ENDS OF THE BARRIER FROM THE E8 JOINT. MEASURED LENGTH IS FOR ONE SIDE OF THE SPLIT MEDIAN BARRIER.

CONCRETE BARRIER = 646 LBS./FT. (0.160 CU. YDS./FT.) PER SIDE.

FINISH ALL EDGES OF BARRIER WITH ½" CHAMFER, EXCEPT WHERE OTHERWISE NOTED.

SPACE CONTROL JOINTS AT 10 FT. MAXIMUM. REFER TO SUPERSTRUCTURE SHEET FOR SPECIFIC SPACING INFORMATION.

BARRIER QUANTITIES ARE LISTED IN SUMMARY OF QUANTITIES FOR SUPERSTRUCTURE.

① PLACE BAR ON TOP OF BOTTOM REINFORCEMENT MAT IN DECK.
② JOINT SEALANT PER MnDOT APPROVED/QUALIFIED PRODUCTS LIST - CRACK AND JOINT MATERIALS - SILICONE JOINT SEALERS.
③ VARIES FROM 6" TO 1'-0½".
④ REFER TO "WATERPROOF EXPANSION DEVICE" STANDARD PLANS FOR COVER PLATE DETAILS.

REVISION:

APPROVED: AUGUST 24, 2016
Kevin Western
STATE BRIDGE ENGINEER

CERTIFIED BY _____ LICENSED PROFESSIONAL ENGINEER _____ DATE
NAME: LIC. NO.

TITLE: SPLIT MEDIAN BARRIER 54" (TYPE S, TL-4)
PARAPET ABUTMENT
(WITH 2" CONCRETE WEARING COURSE)

DES: DR: CHK: CHK:

SHEET NO. OF SHEETS

FIG. 5-397.146(D)

APPROVED:

BRIDGE NO.

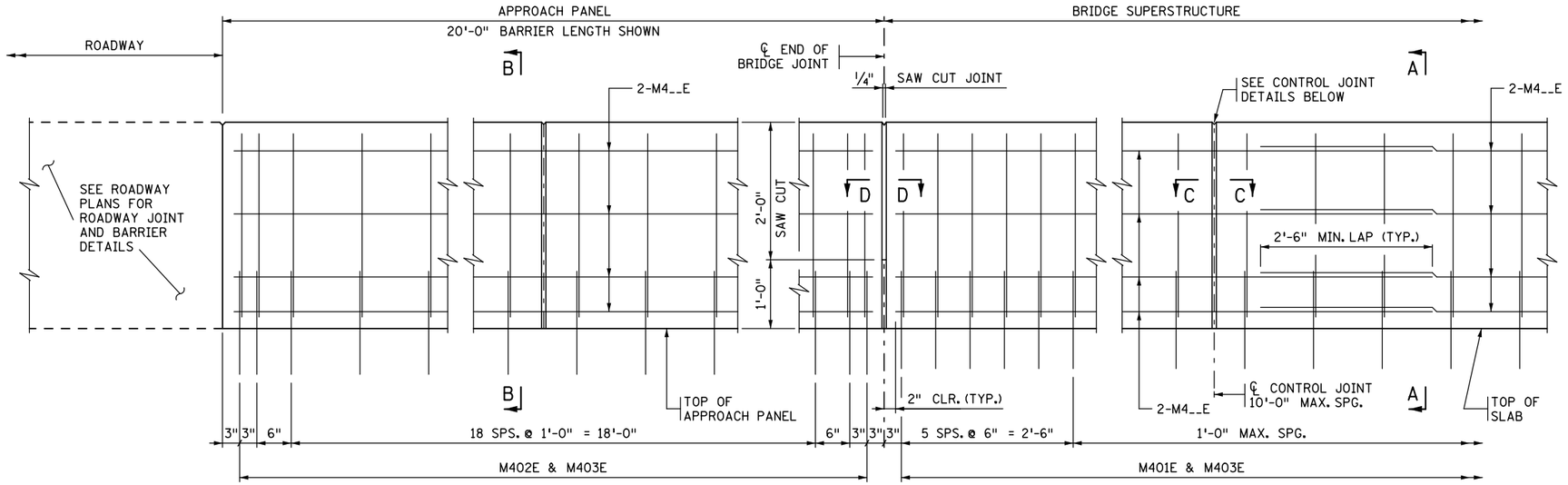

JOINT AT ABUTMENT

(INTEGRAL OR SEMI-INTEGRAL ABUTMENT)

CONTROL JOINT

INSIDE ELEVATION OF BARRIER

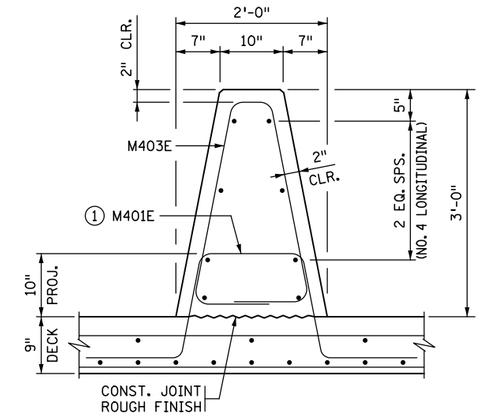

SECTION A-A

DESIGNER NOTE
(REMOVE PRIOR TO PLOTTING FINAL PLAN):
VERIFY LENGTH OF BARRIER ON APPROACH PANEL WITH ROADWAY DESIGNER. REFER TO MEMO TO DESIGNERS (2016-01) FOR ADDITIONAL REQUIREMENTS REGARDING BARRIER PLACEMENT.

BARRIER MEETS NCHRP 350 TL-4 REQUIREMENTS ON BRIDGE DECK AND TL-3 ON APPROACH PANEL.

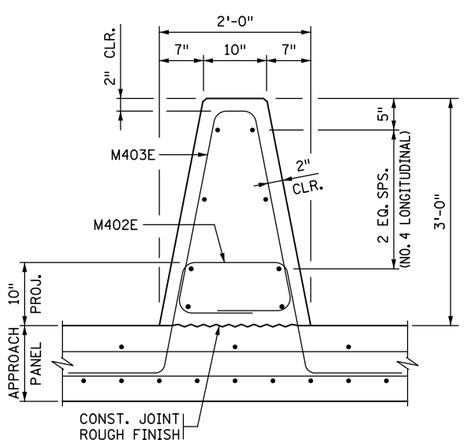

SECTION B-B

CONCRETE APPROACH PANEL

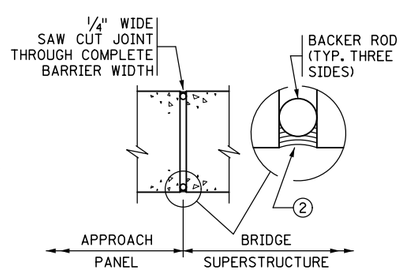

SECTION D-D

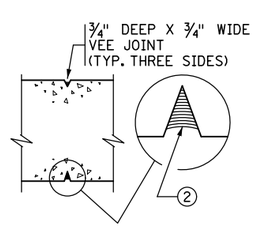

SECTION C-C

CONTRACTOR OPTION 1

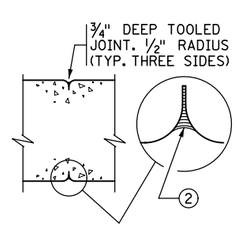

SECTION C-C

CONTRACTOR OPTION 2

CONTROL JOINT DETAILS

WHEN USING SLIP FORM METHOD TO PLACE THE CONCRETE, CUT JOINT 3 INCHES DEEP USING MARGIN TROWEL OR SIMILAR MEANS IMMEDIATELY AFTER CONCRETE PLACEMENT (TYP. THREE SIDES).

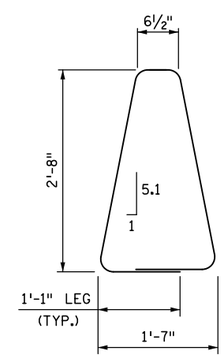

M403E

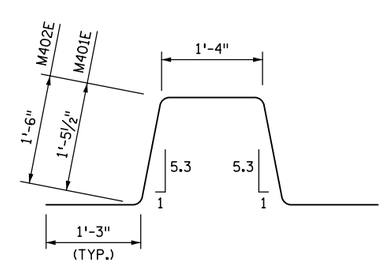

M401E & M402E

BILL OF REINFORCEMENT FOR BARRIER

BAR	NO.	LENGTH	SHAPE	LOCATION
M401E		6'-9"		BARRIER DOWEL
M402E		6'-10"		BARRIER DOWEL
M403E		8'-1"		BARRIER VERTICAL
M4__E				BARRIER LONGITUDINAL
M4__E				BARRIER LONGITUDINAL
M4__E				BARRIER LONGITUDINAL
M4__E				BARRIER LONGITUDINAL
M4__E				BARRIER LONGITUDINAL

GENERAL NOTES

MEASURE PAYMENT LENGTH BETWEEN THE OUTSIDE ENDS OF THE BARRIER FROM THE E8 JOINT.

CONCRETE BARRIER = 638 LBS./FT. (0.157 CU. YDS/FT.)

FINISH ALL EDGES OF BARRIER WITH 1/2" CHAMFER EXCEPT WHERE OTHERWISE NOTED.

SPACE CONTROL JOINTS AT 10 FT. MAXIMUM. REFER TO SUPERSTRUCTURE SHEET FOR SPECIFIC SPACING INFORMATION.

BARRIER QUANTITIES ARE LISTED IN SUMMARY OF QUANTITIES FOR SUPERSTRUCTURE.

① PLACE BAR ON TOP OF BOTTOM REINFORCEMENT MAT IN DECK.

② JOINT SEALANT PER MnDOT APPROVED/QUALIFIED PRODUCTS LIST - CRACK AND JOINT MATERIALS - SILICONE JOINT SEALERS.

REVISION:

APPROVED: AUGUST 24, 2016
Kevin Western
STATE BRIDGE ENGINEER

CERTIFIED BY _____ LICENSED PROFESSIONAL ENGINEER _____ DATE

NAME: LIC. NO.

TITLE: SOLID MEDIAN BARRIER 36" (TYPE S, TL-4)
INTEGRAL OR SEMI-INTEGRAL ABUTMENT (WITHOUT CONCRETE WEARING COURSE)

DES: DR:
CHK: CHK:
SHEET NO. OF SHEETS

APPROVED:

FIG. 5-397.147(A)

BRIDGE NO.

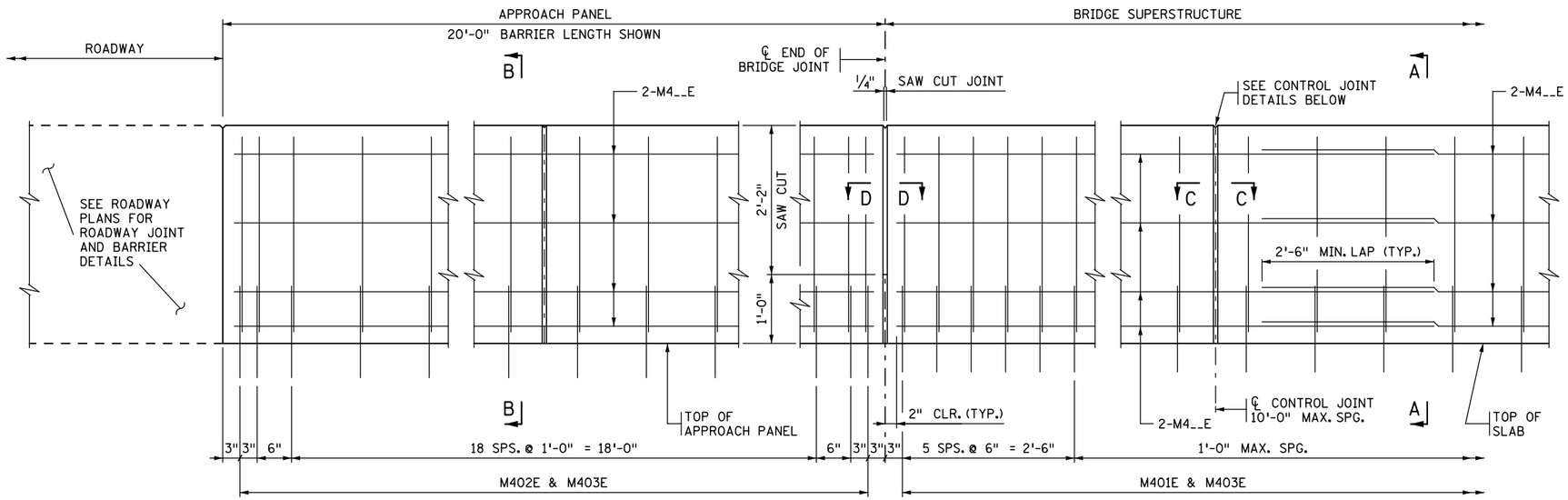

JOINT AT ABUTMENT

(INTEGRAL OR SEMI-INTEGRAL ABUTMENT)

CONTROL JOINT

INSIDE ELEVATION OF BARRIER

CONCRETE WEARING COURSE NOT SHOWN

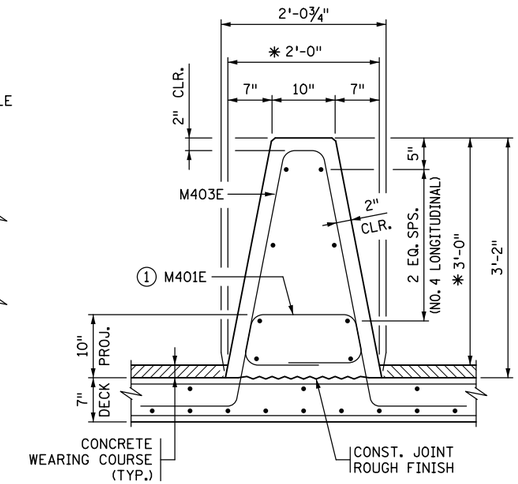

SECTION A-A

✱ DIMENSION SHOWN IS TO THE TOP OF THE WEARING COURSE AT GUTTERLINE.

DESIGNER NOTE
(REMOVE PRIOR TO PLOTTING FINAL PLAN):
VERIFY LENGTH OF BARRIER ON APPROACH PANEL WITH ROADWAY DESIGNER. REFER TO MEMO TO DESIGNERS (2016-01) FOR ADDITIONAL REQUIREMENTS REGARDING BARRIER PLACEMENT.

BARRIER MEETS NCHRP 350 TL-4 REQUIREMENTS ON BRIDGE DECK AND TL-3 ON APPROACH PANEL.

BILL OF REINFORCEMENT FOR BARRIER				
BAR	NO.	LENGTH	SHAPE	LOCATION
M401E		6'-5"		BARRIER DOWEL
M402E		6'-6"		BARRIER DOWEL
M403E		8'-5"		BARRIER VERTICAL
M4__E				BARRIER LONGITUDINAL
M4__E				BARRIER LONGITUDINAL
M4__E				BARRIER LONGITUDINAL
M4__E				BARRIER LONGITUDINAL
M4__E				BARRIER LONGITUDINAL

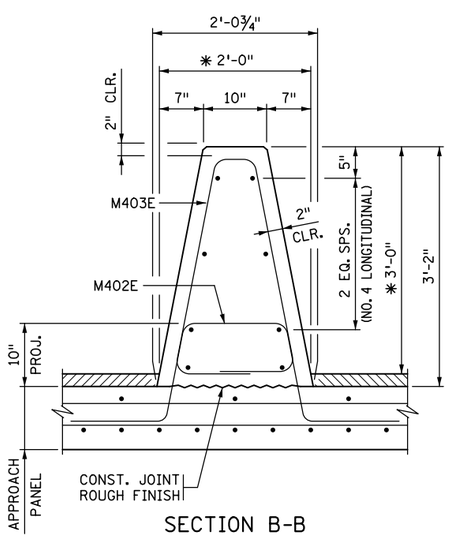

SECTION B-B

CONCRETE APPROACH PANEL.

✱ DIMENSION SHOWN IS TO THE TOP OF THE WEARING COURSE AT GUTTERLINE.

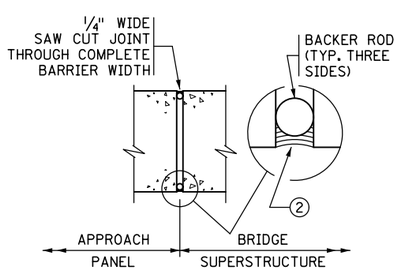

SECTION D-D

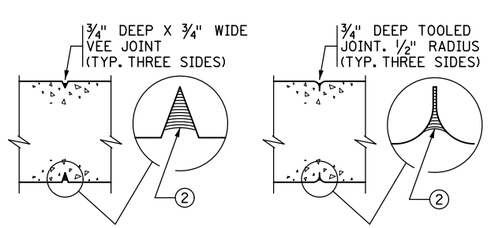

SECTION C-C

CONTRACTOR OPTION 1

SECTION C-C

CONTRACTOR OPTION 2

CONTROL JOINT DETAILS

WHEN USING SLIP FORM METHOD TO PLACE THE CONCRETE, CUT JOINT 3 INCHES DEEP USING MARGIN TROWEL OR SIMILAR MEANS IMMEDIATELY AFTER CONCRETE PLACEMENT (TYP. THREE SIDES).

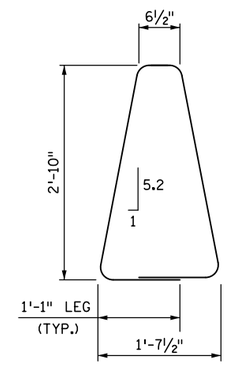

M403E

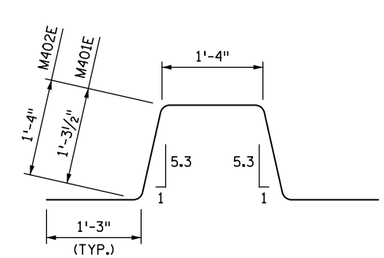

M401E & M402E

GENERAL NOTES

MEASURE PAYMENT LENGTH BETWEEN THE OUTSIDE ENDS OF THE BARRIER FROM THE E8 JOINT.

CONCRETE BARRIER = 688 LBS./FT. (0.170 CU. YDS/FT.)

FINISH ALL EDGES OF BARRIER WITH ½" CHAMFER EXCEPT WHERE OTHERWISE NOTED.

SPACE CONTROL JOINTS AT 10 FT. MAXIMUM. REFER TO SUPERSTRUCTURE SHEET FOR SPECIFIC SPACING INFORMATION.

BARRIER QUANTITIES ARE LISTED IN SUMMARY OF QUANTITIES FOR SUPERSTRUCTURE.

① PLACE BAR ON TOP OF BOTTOM REINFORCEMENT MAT IN DECK.

② JOINT SEALANT PER MnDOT APPROVED/QUALIFIED PRODUCTS LIST - CRACK AND JOINT MATERIALS - SILICONE JOINT SEALERS.

REVISION:

APPROVED: AUGUST 24, 2016

Kevin Western

STATE BRIDGE ENGINEER

CERTIFIED BY _____ LICENSED PROFESSIONAL ENGINEER _____ DATE

NAME: LIC. NO.

TITLE: SOLID MEDIAN BARRIER 36" (TYPE S, TL-4)

INTEGRAL OR SEMI-INTEGRAL ABUTMENT (WITH 2" CONCRETE WEARING COURSE)

DES: DR: CHK: CHK:

SHEET NO. OF SHEETS

APPROVED:

FIG. 5-397.147(B)

BRIDGE NO.

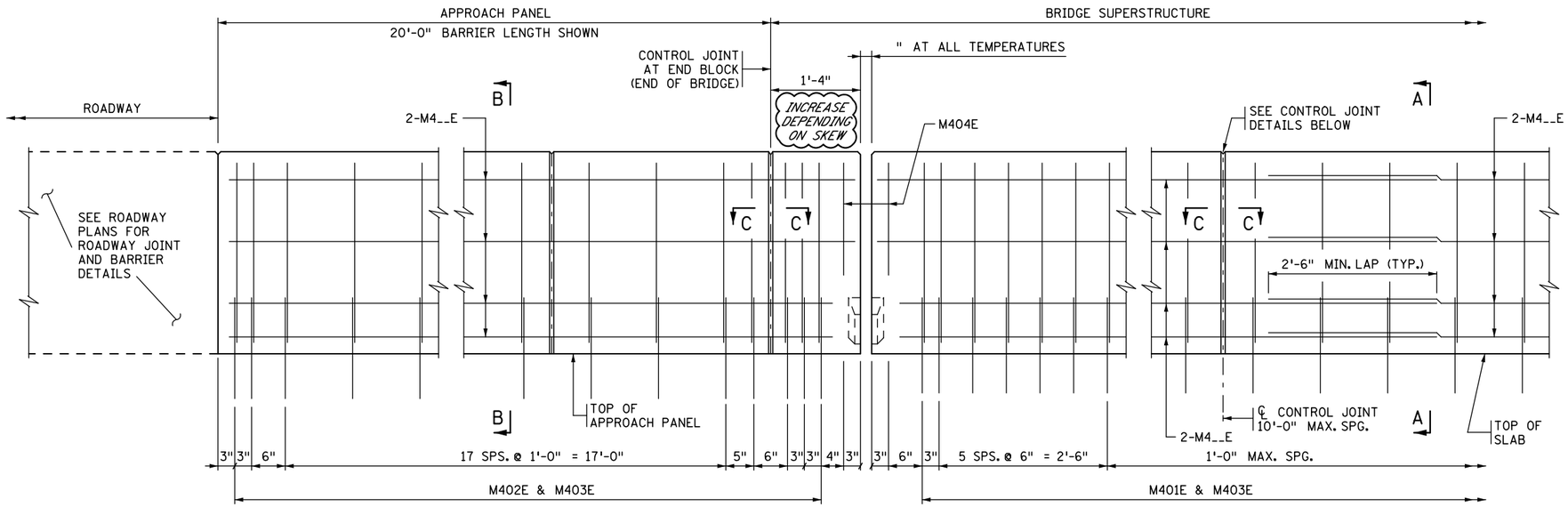

EXPANSION JOINT ③

EXPANSION DEVICE NOT SHOWN

CONTROL JOINT

INSIDE ELEVATION OF BARRIER

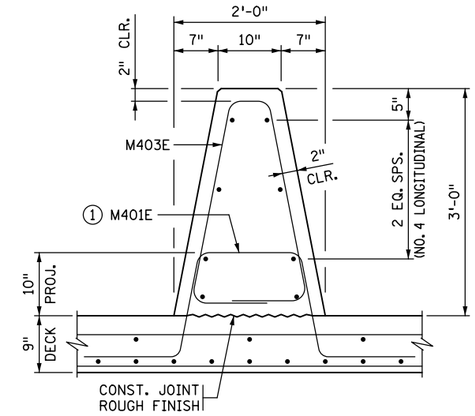

SECTION A-A

DESIGNER NOTE
(REMOVE PRIOR TO PLOTTING FINAL PLAN):
VERIFY LENGTH OF BARRIER ON APPROACH PANEL WITH ROADWAY DESIGNER. REFER TO MEMO TO DESIGNERS (2016-01) FOR ADDITIONAL REQUIREMENTS REGARDING BARRIER PLACEMENT.

BARRIER MEETS NCHRP 350 TL-4 REQUIREMENTS ON BRIDGE DECK AND TL-3 ON APPROACH PANEL.

BILL OF REINFORCEMENT FOR BARRIER

BAR	NO.	LENGTH	SHAPE	LOCATION
M401E		6'-9"		BARRIER DOWEL
M402E		6'-10"		BARRIER DOWEL
M403E		8'-1"		BARRIER VERTICAL
M404E		5'-7"		BARRIER VERTICAL
M4__E				BARRIER LONGITUDINAL
M4__E				BARRIER LONGITUDINAL
M4__E				BARRIER LONGITUDINAL
M4__E				BARRIER LONGITUDINAL

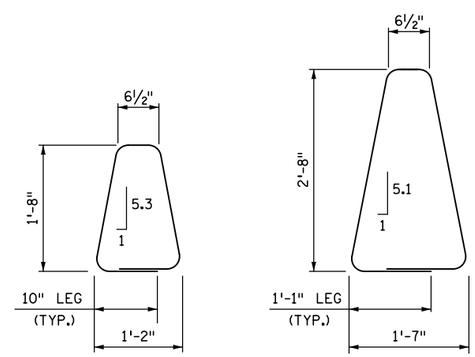

M404E M403E

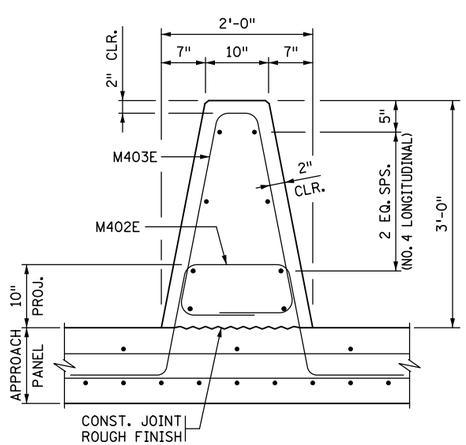

SECTION B-B

CONCRETE APPROACH PANEL

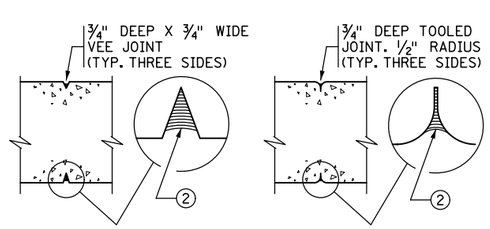

SECTION C-C
CONTRACTOR OPTION 1

SECTION C-C
CONTRACTOR OPTION 2

CONTROL JOINT DETAILS

WHEN USING SLIP FORM METHOD TO PLACE THE CONCRETE, CUT JOINT 3 INCHES DEEP USING MARGIN TROWEL OR SIMILAR MEANS IMMEDIATELY AFTER CONCRETE PLACEMENT (TYP. THREE SIDES).

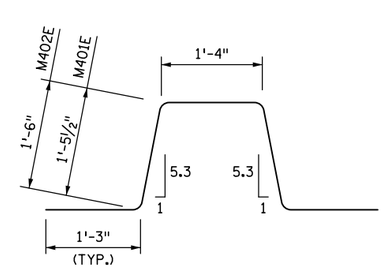

M401E & M402E

GENERAL NOTES

MEASURE PAYMENT LENGTH BETWEEN THE OUTSIDE ENDS OF THE BARRIER FROM THE E8 JOINT.

CONCRETE BARRIER = 638 LBS./FT. (0.157 CU. YDS/FT.)

FINISH ALL EDGES OF BARRIER WITH ½" CHAMFER EXCEPT WHERE OTHERWISE NOTED.

SPACE CONTROL JOINTS AT 10 FT. MAXIMUM. REFER TO SUPERSTRUCTURE SHEET FOR SPECIFIC SPACING INFORMATION.

BARRIER QUANTITIES ARE LISTED IN SUMMARY OF QUANTITIES FOR SUPERSTRUCTURE.

① PLACE BAR ON TOP OF BOTTOM REINFORCEMENT MAT IN DECK.

② JOINT SEALANT PER MnDOT APPROVED/QUALIFIED PRODUCTS LIST - CRACK AND JOINT MATERIALS - SILICONE JOINT SEALERS.

③ REFER TO "WATERPROOF EXPANSION DEVICE" STANDARD PLANS FOR COVER PLATE DETAILS.

REVISION:

APPROVED: AUGUST 24, 2016
Kevin Western
STATE BRIDGE ENGINEER

CERTIFIED BY _____ LICENSED PROFESSIONAL ENGINEER _____ DATE
NAME: LIC. NO.

TITLE: SOLID MEDIAN BARRIER 36" (TYPE S, TL-4)
PARAPET ABUTMENT
(WITHOUT CONCRETE WEARING COURSE)

DES: DR: CHK: CHK:

SHEET NO. OF SHEETS

APPROVED:

FIG. 5-397.147(C)

BRIDGE NO.

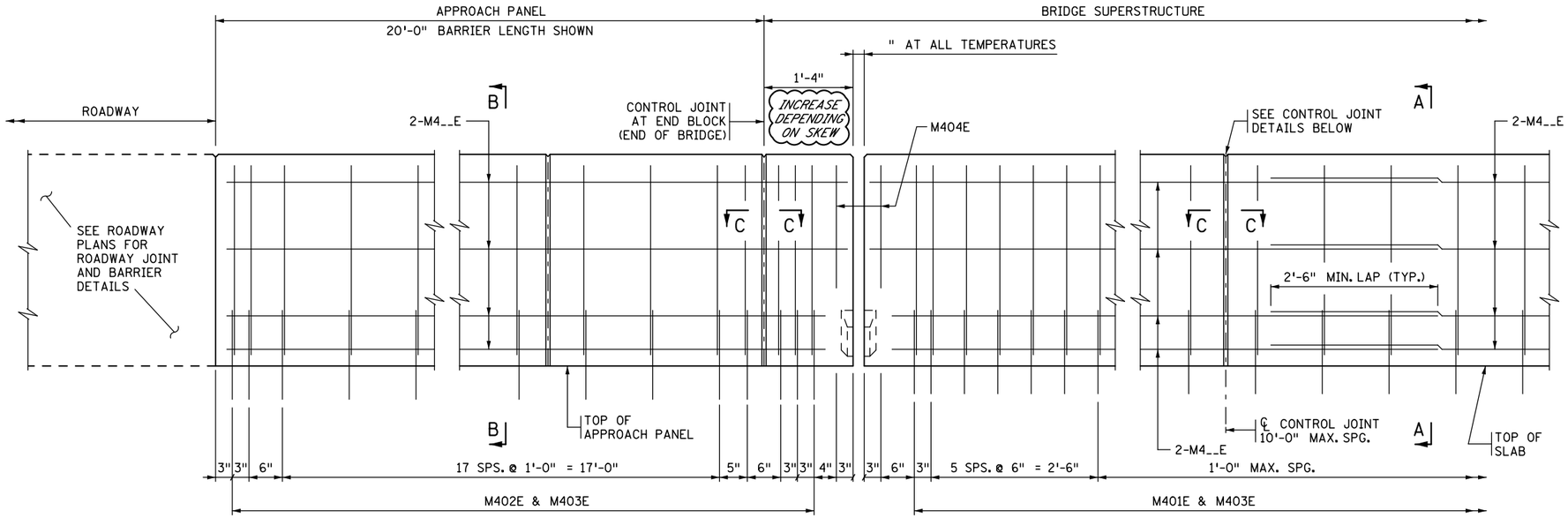

EXPANSION JOINT ③

EXPANSION DEVICE NOT SHOWN

CONTROL JOINT

INSIDE ELEVATION OF BARRIER

CONCRETE WEARING COURSE NOT SHOWN

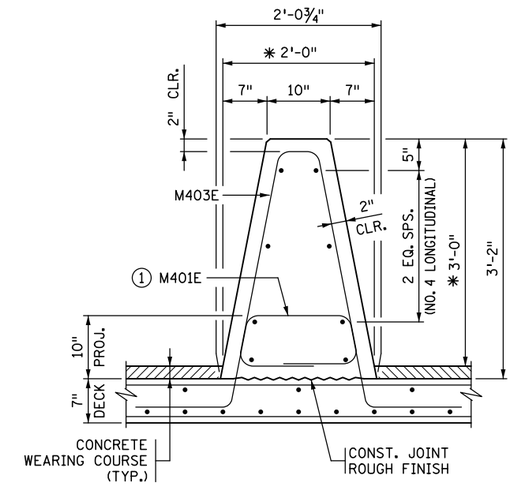

SECTION A-A

✱ DIMENSION SHOWN IS TO THE TOP OF THE WEARING COURSE AT GUTTERLINE.

DESIGNER NOTE
(REMOVE PRIOR TO PLOTTING FINAL PLAN):
VERIFY LENGTH OF BARRIER ON APPROACH PANEL WITH ROADWAY DESIGNER. REFER TO MEMO TO DESIGNERS (2016-01) FOR ADDITIONAL REQUIREMENTS REGARDING BARRIER PLACEMENT.

BARRIER MEETS NCHRP 350 TL-4 REQUIREMENTS ON BRIDGE DECK AND TL-3 ON APPROACH PANEL.

BILL OF REINFORCEMENT FOR BARRIER				
BAR	NO.	LENGTH	SHAPE	LOCATION
M401E		6'-5"		BARRIER DOWEL
M402E		6'-6"		BARRIER DOWEL
M403E		8'-5"		BARRIER VERTICAL
M404E		6'-1"		BARRIER VERTICAL
M4__E				BARRIER LONGITUDINAL
M4__E				BARRIER LONGITUDINAL
M4__E				BARRIER LONGITUDINAL
M4__E				BARRIER LONGITUDINAL

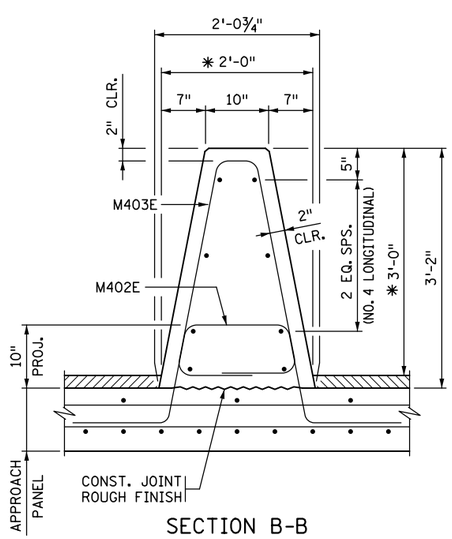

SECTION B-B

CONCRETE APPROACH PANEL.

✱ DIMENSION SHOWN IS TO THE TOP OF THE WEARING COURSE AT GUTTERLINE.

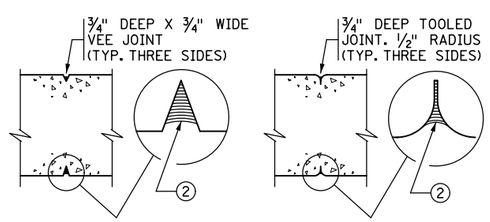

SECTION C-C

CONTRACTOR OPTION 1

SECTION C-C

CONTRACTOR OPTION 2

CONTROL JOINT DETAILS

WHEN USING SLIP FORM METHOD TO PLACE THE CONCRETE, CUT JOINT 3 INCHES DEEP USING MARGIN TROWEL OR SIMILAR MEANS IMMEDIATELY AFTER CONCRETE PLACEMENT (TYP. THREE SIDES).

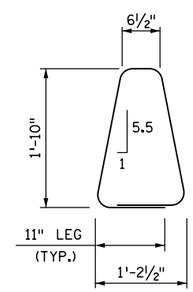

M404E

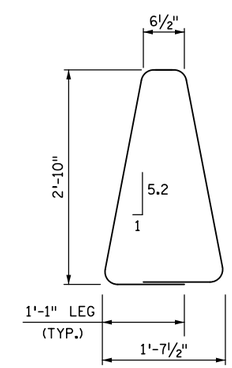

M403E

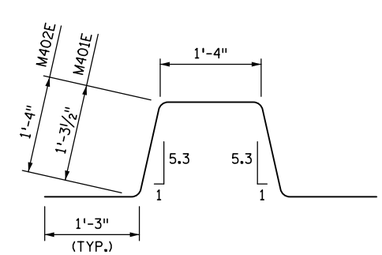

M401E & M402E

GENERAL NOTES

MEASURE PAYMENT LENGTH BETWEEN THE OUTSIDE ENDS OF THE BARRIER FROM THE E8 JOINT.

CONCRETE BARRIER = 688 LBS./FT. (0.170 CU. YDS/FT.)

FINISH ALL EDGES OF BARRIER WITH ½" CHAMFER EXCEPT WHERE OTHERWISE NOTED.

SPACE CONTROL JOINTS AT 10 FT. MAXIMUM. REFER TO SUPERSTRUCTURE SHEET FOR SPECIFIC SPACING INFORMATION.

BARRIER QUANTITIES ARE LISTED IN SUMMARY OF QUANTITIES FOR SUPERSTRUCTURE.

① PLACE BAR ON TOP OF BOTTOM REINFORCEMENT MAT IN DECK.

② JOINT SEALANT PER MnDOT APPROVED/QUALIFIED PRODUCTS LIST- CRACK AND JOINT MATERIALS -SILICONE JOINT SEALERS.

③ REFER TO "WATERPROOF EXPANSION DEVICE" STANDARD PLANS FOR COVER PLATE DETAILS.

REVISION:

APPROVED: AUGUST 24, 2016
Kevin Western
STATE BRIDGE ENGINEER

CERTIFIED BY _____ LICENSED PROFESSIONAL ENGINEER _____ DATE

NAME: LIC. NO.

TITLE: SOLID MEDIAN BARRIER 36" (TYPE S, TL-4)
PARAPET ABUTMENT
(WITH 2" CONCRETE WEARING COURSE)

DES: DR:
CHK: CHK:

SHEET NO. OF SHEETS

APPROVED:

FIG. 5-397.147(D)

BRIDGE NO.

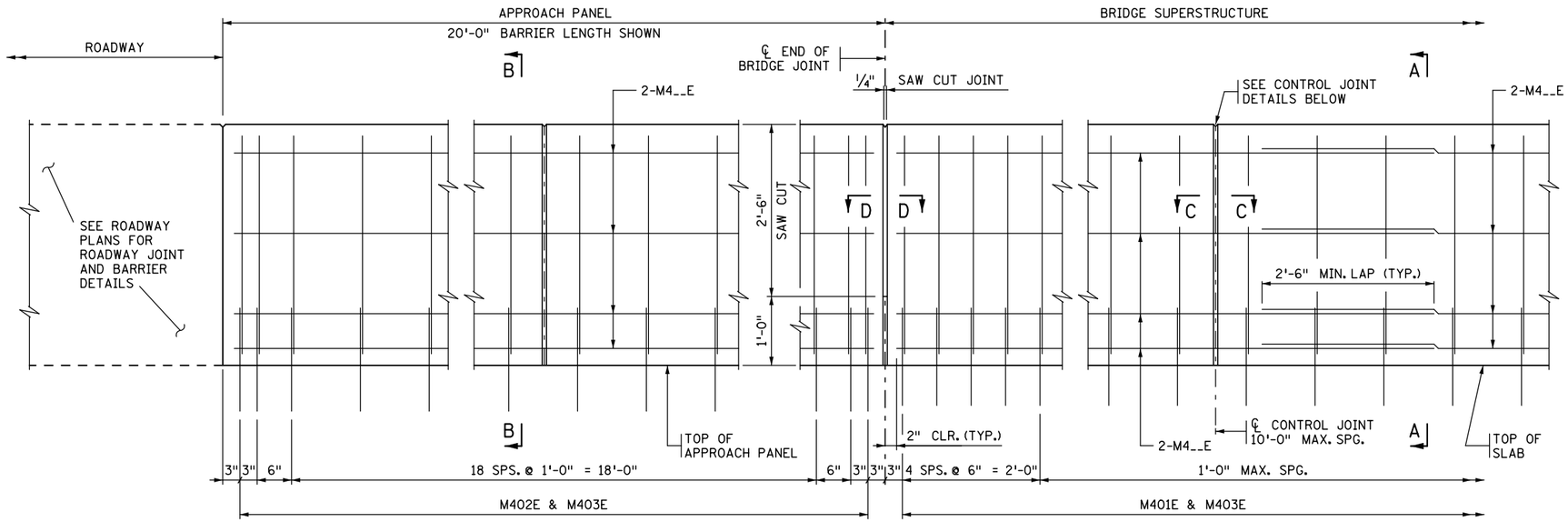

JOINT AT ABUTMENT

(INTEGRAL OR SEMI-INTEGRAL ABUTMENT)

CONTROL JOINT

INSIDE ELEVATION OF BARRIER

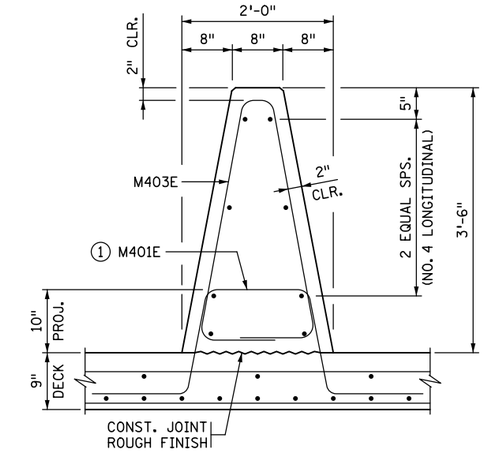

SECTION A-A

DESIGNER NOTE
(REMOVE PRIOR TO PLOTTING FINAL PLAN):
VERIFY LENGTH OF BARRIER ON APPROACH PANEL WITH ROADWAY DESIGNER. REFER TO MEMO TO DESIGNERS (2016-01) FOR ADDITIONAL REQUIREMENTS REGARDING BARRIER PLACEMENT.

BARRIER MEETS NCHRP 350 TL-4 REQUIREMENTS ON BRIDGE DECK AND TL-3 ON APPROACH PANEL.

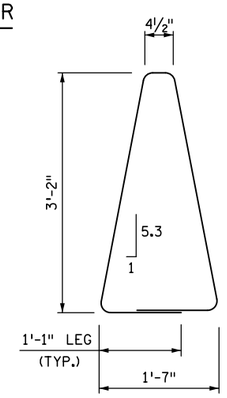

M403E

BILL OF REINFORCEMENT FOR BARRIER				
BAR	NO.	LENGTH	SHAPE	LOCATION
M401E		6'-9"		BARRIER DOWEL
M402E		6'-10"		BARRIER DOWEL
M403E		8'-11"		BARRIER VERTICAL
M4__E				BARRIER LONGITUDINAL
M4__E				BARRIER LONGITUDINAL
M4__E				BARRIER LONGITUDINAL
M4__E				BARRIER LONGITUDINAL
M4__E				BARRIER LONGITUDINAL

GENERAL NOTES

MEASURE PAYMENT LENGTH BETWEEN THE OUTSIDE ENDS OF THE BARRIER FROM THE E8 JOINT.

CONCRETE BARRIER = 700 LBS./FT. (0.173 CU. YDS/FT.)

FINISH ALL EDGES OF BARRIER WITH 1/2" CHAMFER EXCEPT WHERE OTHERWISE NOTED.

SPACE CONTROL JOINTS AT 10 FT. MAXIMUM. REFER TO SUPERSTRUCTURE SHEET FOR SPECIFIC SPACING INFORMATION.

BARRIER QUANTITIES ARE LISTED IN SUMMARY OF QUANTITIES FOR SUPERSTRUCTURE.

1 PLACE BAR ON TOP OF BOTTOM REINFORCEMENT MAT IN DECK.

2 JOINT SEALANT PER MnDOT APPROVED/QUALIFIED PRODUCTS LIST - CRACK AND JOINT MATERIALS - SILICONE JOINT SEALERS.

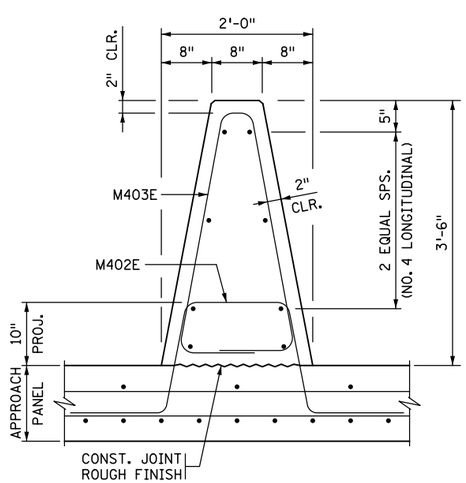

SECTION B-B

CONCRETE APPROACH PANEL

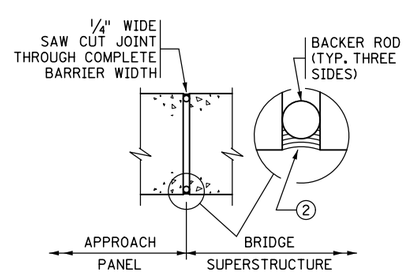

SECTION D-D

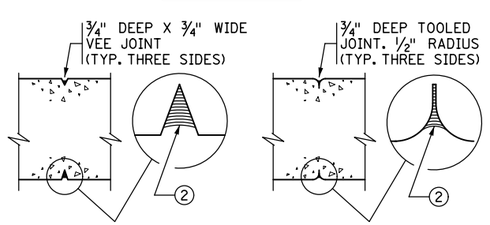

SECTION C-C

CONTRACTOR OPTION 1

SECTION C-C

CONTRACTOR OPTION 2

CONTROL JOINT DETAILS

WHEN USING SLIP FORM METHOD TO PLACE THE CONCRETE, CUT JOINT 3 INCHES DEEP USING MARGIN TROWEL OR SIMILAR MEANS IMMEDIATELY AFTER CONCRETE PLACEMENT (TYP. THREE SIDES).

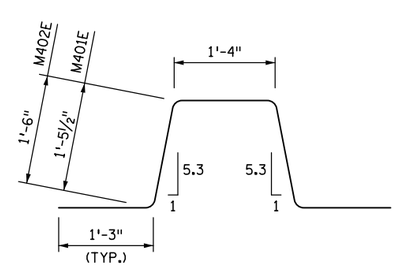

M401E & M402E

REVISION:

APPROVED: AUGUST 24, 2016

Kevin Western

STATE BRIDGE ENGINEER

CERTIFIED BY _____ LICENSED PROFESSIONAL ENGINEER _____ DATE

NAME: LIC. NO.

TITLE: SOLID MEDIAN BARRIER 42" (TYPE S, TL-4)

INTEGRAL OR SEMI-INTEGRAL ABUTMENT (WITHOUT CONCRETE WEARING COURSE)

DES: DR: CHK: CHK:

SHEET NO. OF SHEETS

APPROVED:

FIG. 5-397.148(A)

BRIDGE NO.

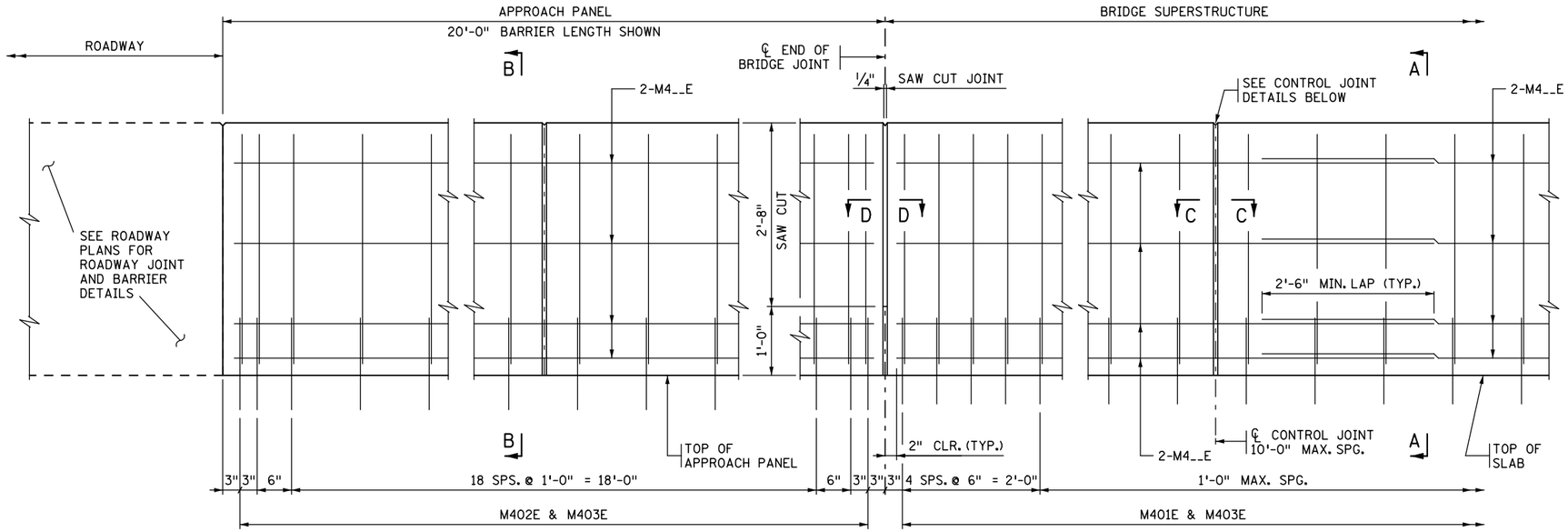

JOINT AT ABUTMENT ③

(INTEGRAL OR SEMI-INTEGRAL ABUTMENT)

CONTROL JOINT

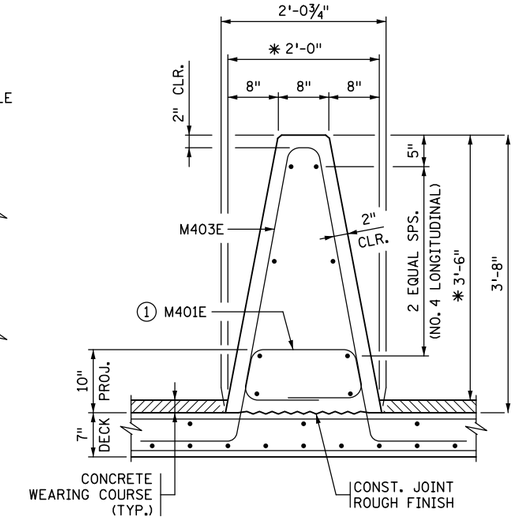

SECTION A-A

✱ DIMENSION SHOWN IS TO THE TOP OF THE WEARING COURSE AT GUTTERLINE.

DESIGNER NOTE
(REMOVE PRIOR TO PLOTTING FINAL PLAN):
VERIFY LENGTH OF BARRIER ON APPROACH PANEL WITH ROADWAY DESIGNER. REFER TO MEMO TO DESIGNERS (2016-01) FOR ADDITIONAL REQUIREMENTS REGARDING BARRIER PLACEMENT.

INSIDE ELEVATION OF BARRIER

CONCRETE WEARING COURSE NOT SHOWN

BARRIER MEETS NCHRP 350 TL-4 REQUIREMENTS ON BRIDGE DECK AND TL-3 ON APPROACH PANEL.

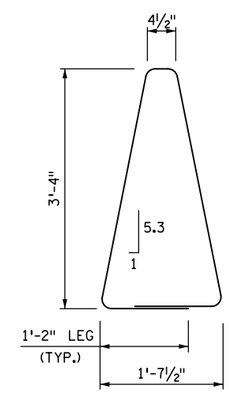

M403E

BILL OF REINFORCEMENT FOR BARRIER				
BAR	NO.	LENGTH	SHAPE	LOCATION
M401E		6'-5"		BARRIER DOWEL
M402E		6'-6"		BARRIER DOWEL
M403E		9'-5"		BARRIER VERTICAL
M4__E				BARRIER LONGITUDINAL
M4__E				BARRIER LONGITUDINAL
M4__E				BARRIER LONGITUDINAL
M4__E				BARRIER LONGITUDINAL
M4__E				BARRIER LONGITUDINAL

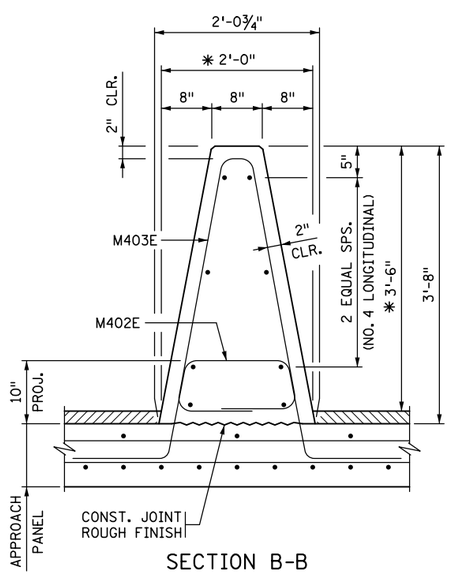

SECTION B-B

CONCRETE APPROACH PANEL.

✱ DIMENSION SHOWN IS TO THE TOP OF THE WEARING COURSE AT GUTTERLINE.

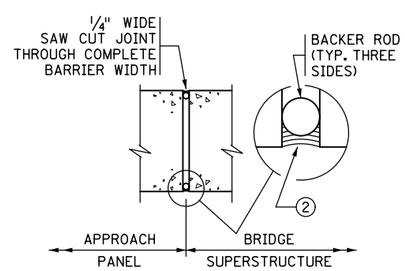

SECTION D-D

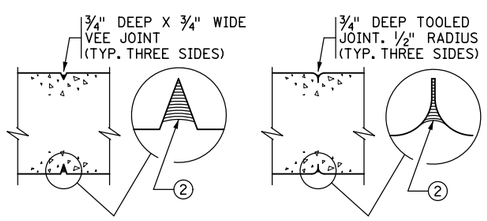

SECTION C-C

CONTRACTOR OPTION 1

SECTION C-C

CONTRACTOR OPTION 2

CONTROL JOINT DETAILS

WHEN USING SLIP FORM METHOD TO PLACE THE CONCRETE, CUT JOINT 3 INCHES DEEP USING MARGIN TROWEL OR SIMILAR MEANS IMMEDIATELY AFTER CONCRETE PLACEMENT (TYP. THREE SIDES).

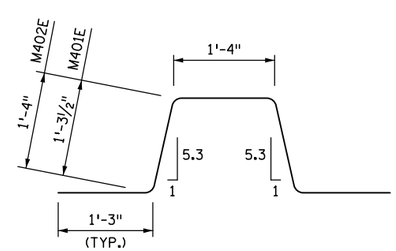

M401E & M402E

GENERAL NOTES

MEASURE PAYMENT LENGTH BETWEEN THE OUTSIDE ENDS OF THE BARRIER FROM THE E8 JOINT.

CONCRETE BARRIER = 751 LBS./FT. (0.185 CU. YDS/FT.)

FINISH ALL EDGES OF BARRIER WITH ½" CHAMFER EXCEPT WHERE OTHERWISE NOTED.

SPACE CONTROL JOINTS AT 10 FT. MAXIMUM. REFER TO SUPERSTRUCTURE SHEET FOR SPECIFIC SPACING INFORMATION.

BARRIER QUANTITIES ARE LISTED IN SUMMARY OF QUANTITIES FOR SUPERSTRUCTURE.

① PLACE BAR ON TOP OF BOTTOM REINFORCEMENT MAT IN DECK.

② JOINT SEALANT PER MnDOT APPROVED/QUALIFIED PRODUCTS LIST - CRACK AND JOINT MATERIALS - SILICONE JOINT SEALERS.

REVISION:

APPROVED: AUGUST 24, 2016

Kevin Western

STATE BRIDGE ENGINEER

CERTIFIED BY _____ LICENSED PROFESSIONAL ENGINEER _____ DATE

NAME: LIC. NO.

TITLE: SOLID MEDIAN BARRIER 42" (TYPE S, TL-4)

INTEGRAL OR SEMI-INTEGRAL ABUTMENT (WITH 2" CONCRETE WEARING COURSE)

DES: DR: CHK: CHK:

SHEET NO. OF SHEETS

APPROVED:

FIG. 5-397.148(B)

BRIDGE NO.

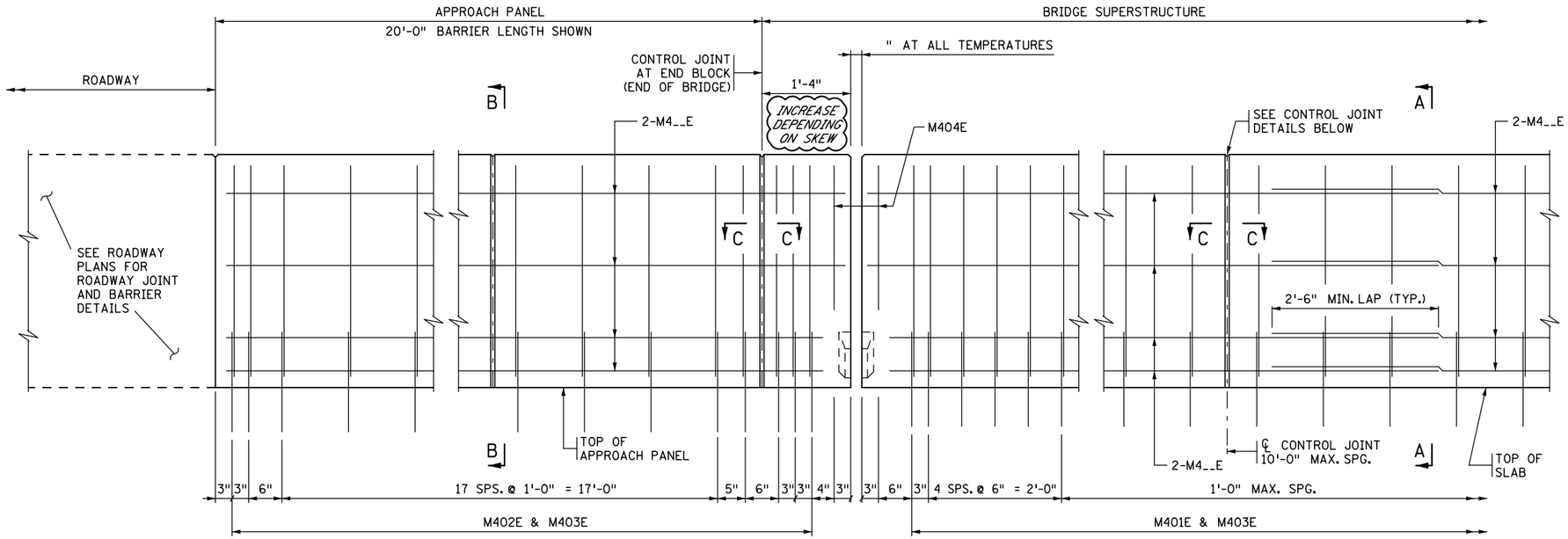

EXPANSION JOINT ③

EXPANSION DEVICE NOT SHOWN

CONTROL JOINT

INSIDE ELEVATION OF BARRIER

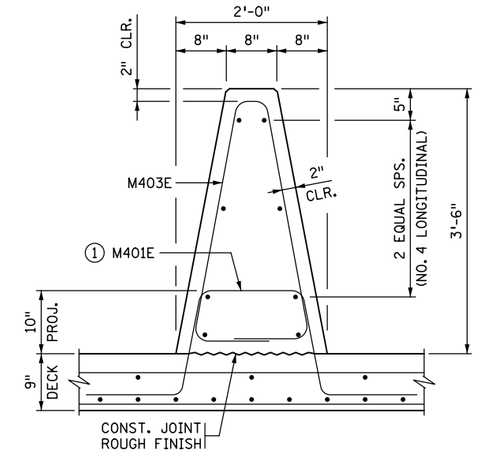

SECTION A-A

DESIGNER NOTE
(REMOVE PRIOR TO PLOTTING FINAL PLAN):
VERIFY LENGTH OF BARRIER ON APPROACH PANEL
WITH ROADWAY DESIGNER. REFER TO MEMO TO DESIGNERS (2016-01)
FOR ADDITIONAL REQUIREMENTS REGARDING BARRIER PLACEMENT.

BARRIER MEETS NCHRP 350 TL-4 REQUIREMENTS ON BRIDGE DECK AND TL-3 ON APPROACH PANEL.

BILL OF REINFORCEMENT FOR BARRIER

BAR	NO.	LENGTH	SHAPE	LOCATION
M401E		6'-9"		BARRIER DOWEL
M402E		6'-10"		BARRIER DOWEL
M403E		8'-11"		BARRIER VERTICAL
M404E		6'-5"		BARRIER VERTICAL
M4__E				BARRIER LONGITUDINAL
M4__E				BARRIER LONGITUDINAL
M4__E				BARRIER LONGITUDINAL
M4__E				BARRIER LONGITUDINAL

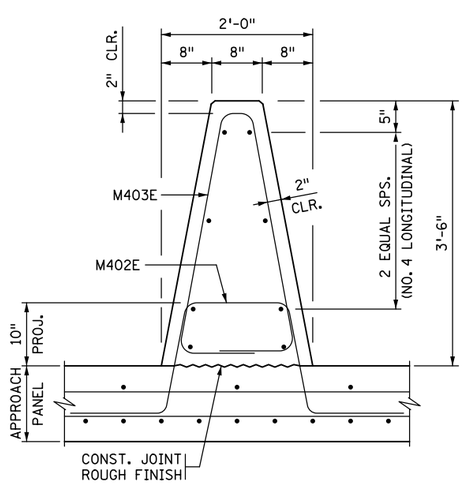

SECTION B-B

CONCRETE APPROACH PANEL

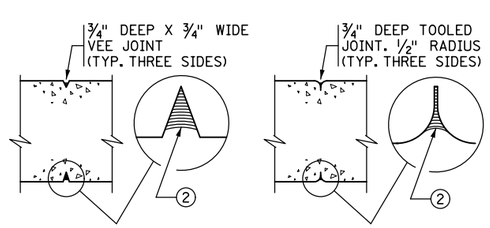

SECTION C-C

CONTRACTOR OPTION 1

SECTION C-C

CONTRACTOR OPTION 2

CONTROL JOINT DETAILS

WHEN USING SLIP FORM METHOD TO PLACE THE CONCRETE, CUT JOINT 3 INCHES DEEP USING MARGIN TROWEL OR SIMILAR MEANS IMMEDIATELY AFTER CONCRETE PLACEMENT (TYP. THREE SIDES).

M404E

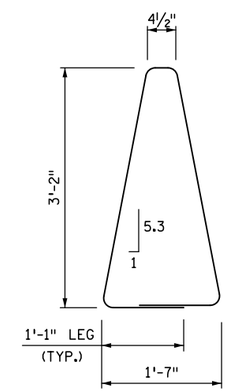

M403E

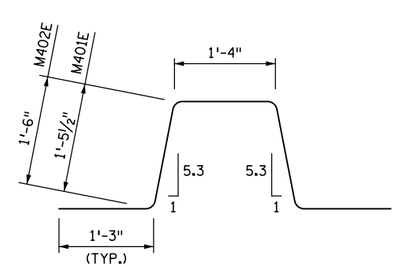

M401E & M402E

GENERAL NOTES

MEASURE PAYMENT LENGTH BETWEEN THE OUTSIDE ENDS OF THE BARRIER FROM THE E8 JOINT.

CONCRETE BARRIER = 700 LBS./FT. (0.173 CU. YDS/FT.)

FINISH ALL EDGES OF BARRIER WITH ½" CHAMFER EXCEPT WHERE OTHERWISE NOTED.

SPACE CONTROL JOINTS AT 10 FT. MAXIMUM. REFER TO SUPERSTRUCTURE SHEET FOR SPECIFIC SPACING INFORMATION.

BARRIER QUANTITIES ARE LISTED IN SUMMARY OF QUANTITIES FOR SUPERSTRUCTURE.

① PLACE BAR ON TOP OF BOTTOM REINFORCEMENT MAT IN DECK.

② JOINT SEALANT PER MnDOT APPROVED/QUALIFIED PRODUCTS LIST - CRACK AND JOINT MATERIALS - SILICONE JOINT SEALERS.

③ REFER TO "WATERPROOF EXPANSION DEVICE" STANDARD PLANS FOR COVER PLATE DETAILS.

REVISION:

APPROVED: AUGUST 24, 2016

Kevin Western

STATE BRIDGE ENGINEER

CERTIFIED BY _____ LICENSED PROFESSIONAL ENGINEER _____ DATE

NAME: LIC. NO.

TITLE: SOLID MEDIAN BARRIER 42" (TYPE S, TL-4) PARAPET ABUTMENT (WITHOUT CONCRETE WEARING COURSE)

DES: DR: CHK: CHK:

APPROVED:

SHEET NO. OF SHEETS

FIG. 5-397.148(C)

BRIDGE NO.

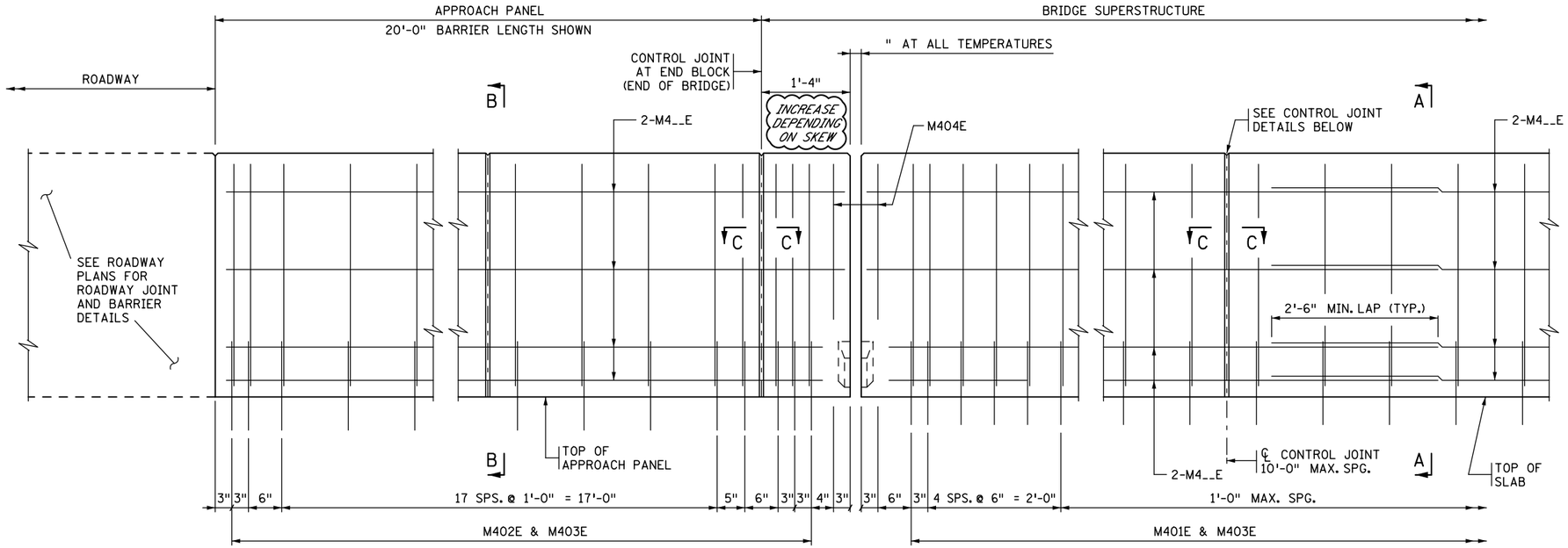

EXPANSION JOINT ③

EXPANSION DEVICE NOT SHOWN

CONTROL JOINT

INSIDE ELEVATION OF BARRIER

CONCRETE WEARING COURSE NOT SHOWN

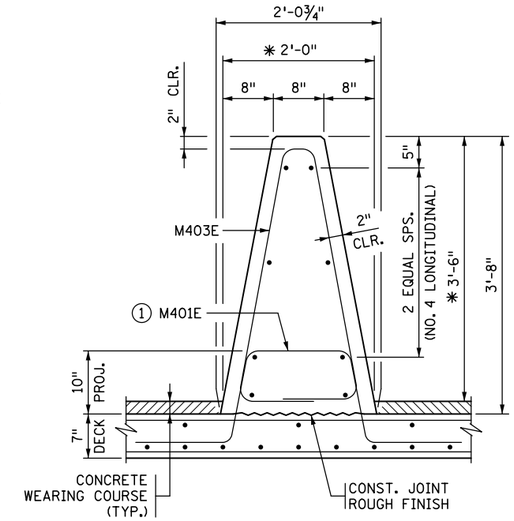

SECTION A-A

✱ DIMENSION SHOWN IS TO THE TOP OF THE WEARING COURSE AT GUTTERLINE.

DESIGNER NOTE
(REMOVE PRIOR TO PLOTTING FINAL PLAN):
VERIFY LENGTH OF BARRIER ON APPROACH PANEL WITH ROADWAY DESIGNER. REFER TO MEMO TO DESIGNERS (2016-01) FOR ADDITIONAL REQUIREMENTS REGARDING BARRIER PLACEMENT.

BARRIER MEETS NCHRP 350 TL-4 REQUIREMENTS ON BRIDGE DECK AND TL-3 ON APPROACH PANEL.

BILL OF REINFORCEMENT FOR BARRIER

BAR	NO.	LENGTH	SHAPE	LOCATION
M401E		6'-5"		BARRIER DOWEL
M402E		6'-6"		BARRIER DOWEL
M403E		9'-5"		BARRIER VERTICAL
M404E		6'-11"		BARRIER VERTICAL
M4__E				BARRIER LONGITUDINAL
M4__E				BARRIER LONGITUDINAL
M4__E				BARRIER LONGITUDINAL
M4__E				BARRIER LONGITUDINAL

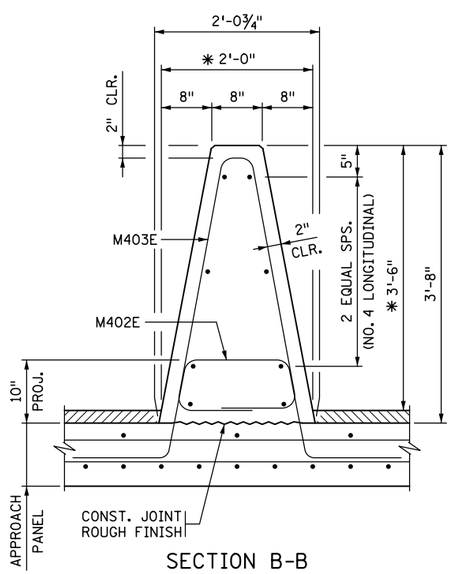

SECTION B-B

CONCRETE APPROACH PANEL.

✱ DIMENSION SHOWN IS TO THE TOP OF THE WEARING COURSE AT GUTTERLINE.

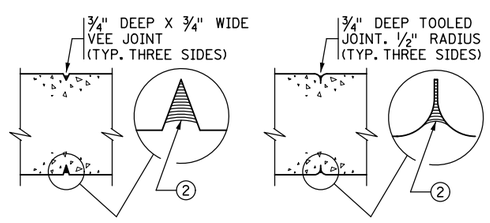

SECTION C-C

CONTRACTOR OPTION 1

SECTION C-C

CONTRACTOR OPTION 2

CONTROL JOINT DETAILS

WHEN USING SLIP FORM METHOD TO PLACE THE CONCRETE, CUT JOINT 3 INCHES DEEP USING MARGIN TROWEL OR SIMILAR MEANS IMMEDIATELY AFTER CONCRETE PLACEMENT (TYP. THREE SIDES).

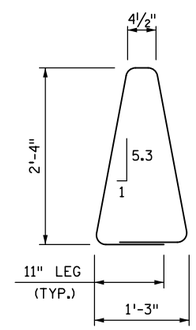

M404E

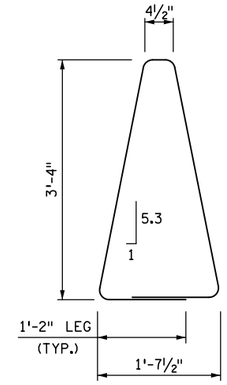

M403E

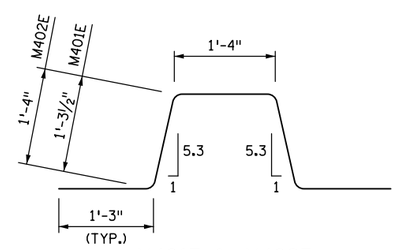

M401E & M402E

GENERAL NOTES

MEASURE PAYMENT LENGTH BETWEEN THE OUTSIDE ENDS OF THE BARRIER FROM THE E8 JOINT.

CONCRETE BARRIER = 751 LBS./FT. (0.185 CU. YDS/FT.)

FINISH ALL EDGES OF BARRIER WITH ½" CHAMFER EXCEPT WHERE OTHERWISE NOTED.

SPACE CONTROL JOINTS AT 10 FT. MAXIMUM. REFER TO SUPERSTRUCTURE SHEET FOR SPECIFIC SPACING INFORMATION.

BARRIER QUANTITIES ARE LISTED IN SUMMARY OF QUANTITIES FOR SUPERSTRUCTURE.

① PLACE BAR ON TOP OF BOTTOM REINFORCEMENT MAT IN DECK.

② JOINT SEALANT PER MnDOT APPROVED/QUALIFIED PRODUCTS LIST - CRACK AND JOINT MATERIALS - SILICONE JOINT SEALERS.

③ REFER TO "WATERPROOF EXPANSION DEVICE" STANDARD PLANS FOR COVER PLATE DETAILS.

REVISION:

APPROVED: AUGUST 24, 2016

Kevin Western

STATE BRIDGE ENGINEER

CERTIFIED BY _____ LICENSED PROFESSIONAL ENGINEER _____ DATE

NAME: LIC. NO.

TITLE: SOLID MEDIAN BARRIER 42" (TYPE S, TL-4)
PARAPET ABUTMENT
(WITH 2" CONCRETE WEARING COURSE)

DES: DR: CHK: CHK:

SHEET NO. OF SHEETS

APPROVED:

FIG. 5-397.148(D)

BRIDGE NO.

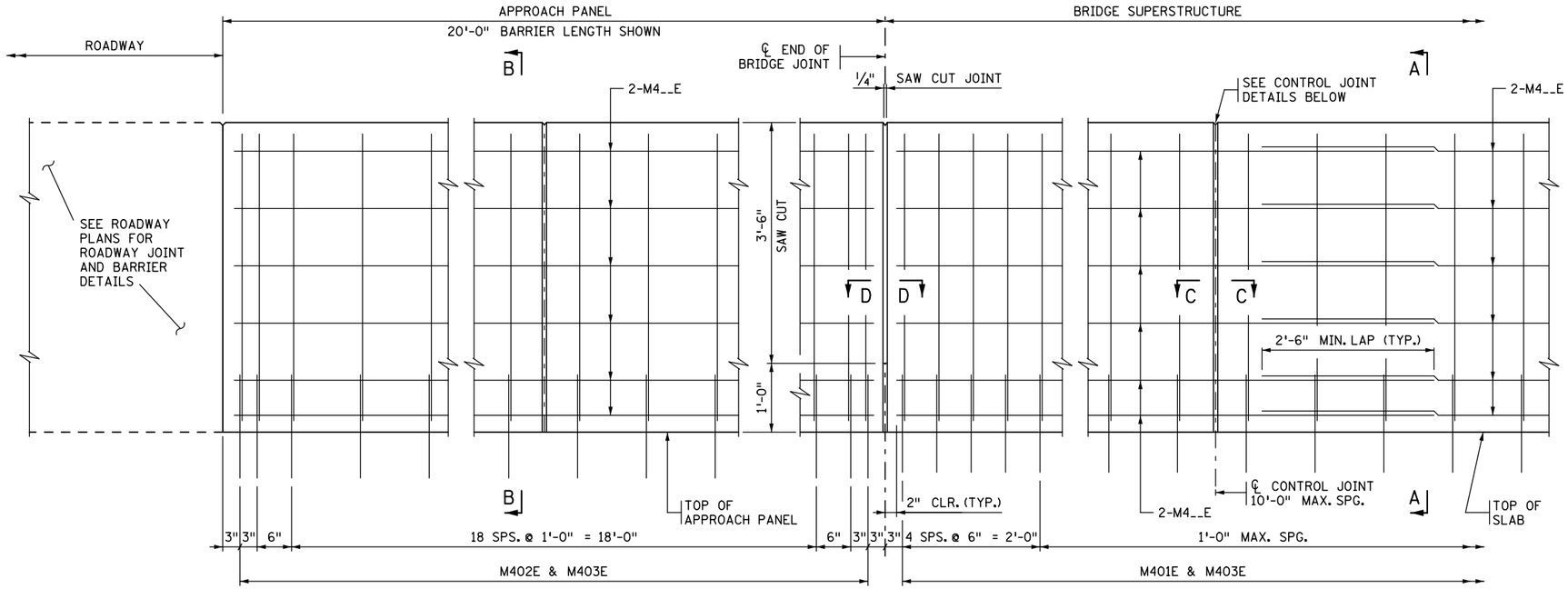

JOINT AT ABUTMENT

(INTEGRAL OR SEMI-INTEGRAL ABUTMENT)

CONTROL JOINT

INSIDE ELEVATION OF BARRIER

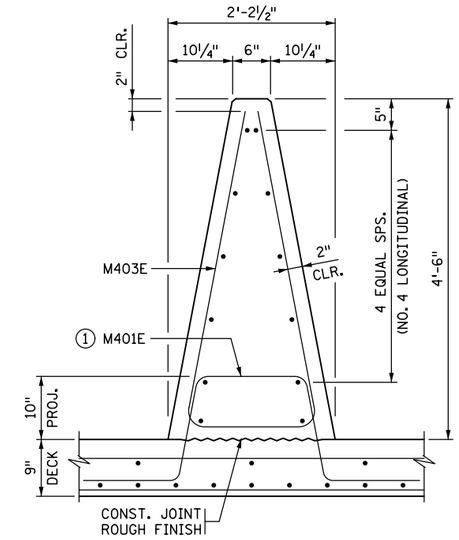

SECTION A-A

DESIGNER NOTE
(REMOVE PRIOR TO PLOTTING FINAL PLAN):
VERIFY LENGTH OF BARRIER ON APPROACH PANEL WITH ROADWAY DESIGNER. REFER TO MEMO TO DESIGNERS (2016-01) FOR ADDITIONAL REQUIREMENTS REGARDING BARRIER PLACEMENT.

BARRIER MEETS NCHRP 350 TL-4 REQUIREMENTS ON BRIDGE DECK AND TL-3 ON APPROACH PANEL.

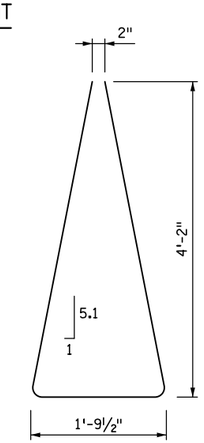

M403E

BILL OF REINFORCEMENT FOR BARRIER				
BAR	NO.	LENGTH	SHAPE	LOCATION
M401E		7'-0"		BARRIER DOWEL
M402E		7'-1"		BARRIER DOWEL
M403E		10'-2"		BARRIER VERTICAL
M4__E				BARRIER LONGITUDINAL
M4__E				BARRIER LONGITUDINAL
M4__E				BARRIER LONGITUDINAL
M4__E				BARRIER LONGITUDINAL
M4__E				BARRIER LONGITUDINAL

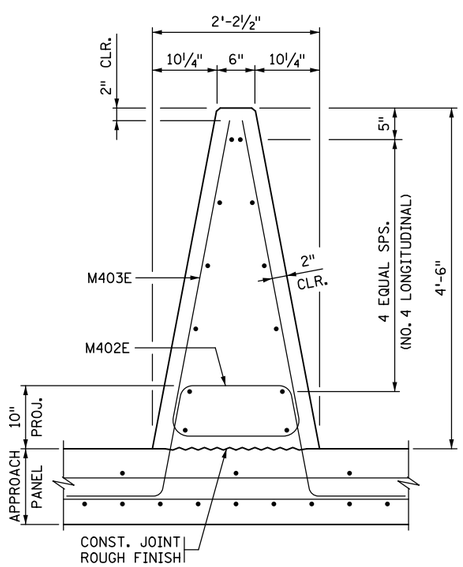

SECTION B-B

CONCRETE APPROACH PANEL

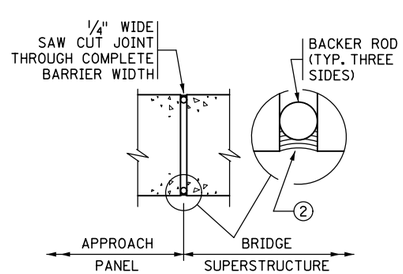

SECTION D-D

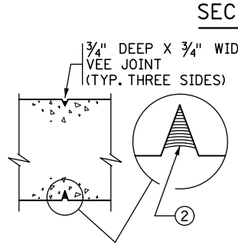

SECTION C-C

CONTRACTOR OPTION 1

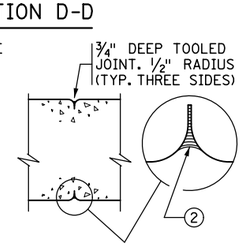

SECTION C-C

CONTRACTOR OPTION 2

CONTROL JOINT DETAILS

WHEN USING SLIP FORM METHOD TO PLACE THE CONCRETE, CUT JOINT 3 INCHES DEEP USING MARGIN TROWEL OR SIMILAR MEANS IMMEDIATELY AFTER CONCRETE PLACEMENT (TYP. THREE SIDES).

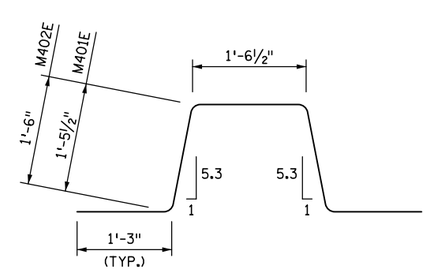

M401E & M402E

GENERAL NOTES

MEASURE PAYMENT LENGTH BETWEEN THE OUTSIDE ENDS OF THE BARRIER FROM THE E8 JOINT.

CONCRETE BARRIER = 914 LBS./FT. (0.226 CU. YDS/FT.)

FINISH ALL EDGES OF BARRIER WITH 1/2" CHAMFER EXCEPT WHERE OTHERWISE NOTED.

SPACE CONTROL JOINTS AT 10 FT. MAXIMUM. REFER TO SUPERSTRUCTURE SHEET FOR SPECIFIC SPACING INFORMATION.

BARRIER QUANTITIES ARE LISTED IN SUMMARY OF QUANTITIES FOR SUPERSTRUCTURE.

① PLACE BAR ON TOP OF BOTTOM REINFORCEMENT MAT IN DECK.

② JOINT SEALANT PER MnDOT APPROVED/QUALIFIED PRODUCTS LIST - CRACK AND JOINT MATERIALS - SILICONE JOINT SEALERS.

REVISION:

APPROVED: AUGUST 24, 2016

Kevin Western

STATE BRIDGE ENGINEER

CERTIFIED BY _____ LICENSED PROFESSIONAL ENGINEER _____ DATE

NAME: LIC. NO.

TITLE: SOLID MEDIAN BARRIER 54" (TYPE S, TL-4)
INTEGRAL OR SEMI-INTEGRAL ABUTMENT (WITHOUT CONCRETE WEARING COURSE)

DES: DR:
CHK: CHK:
SHEET NO. OF SHEETS

APPROVED:

FIG. 5-397.149(A)

BRIDGE NO.

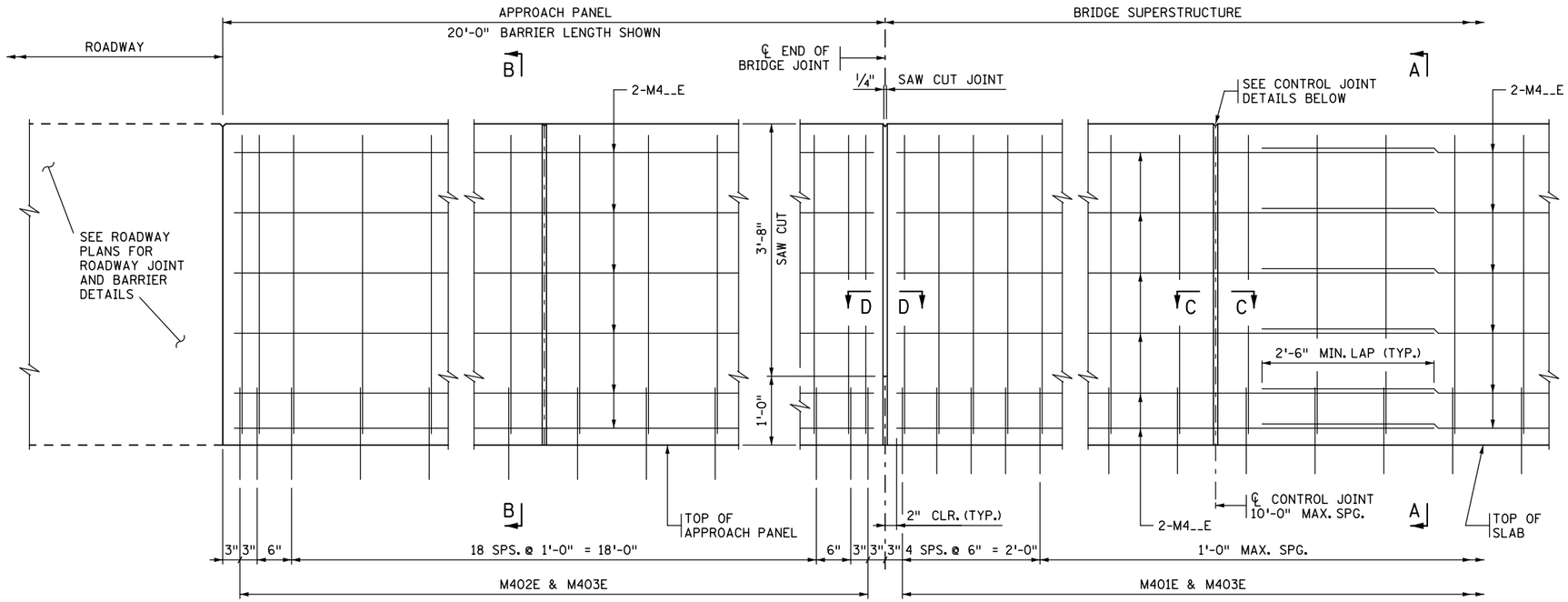

JOINT AT ABUTMENT

(INTEGRAL OR SEMI-INTEGRAL ABUTMENT)

CONTROL JOINT

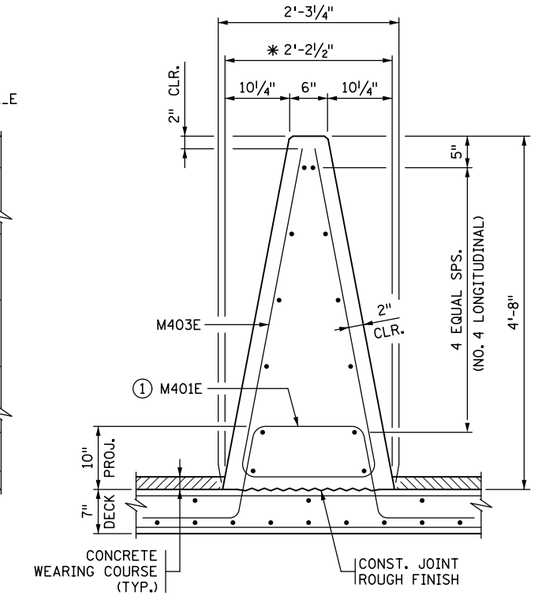

SECTION A-A

✱ DIMENSION SHOWN IS TO THE TOP OF THE WEARING COURSE AT GUTTERLINE.

INSIDE ELEVATION OF BARRIER

CONCRETE WEARING COURSE NOT SHOWN

BARRIER MEETS NCHRP 350 TL-4 REQUIREMENTS ON BRIDGE DECK AND TL-3 ON APPROACH PANEL.

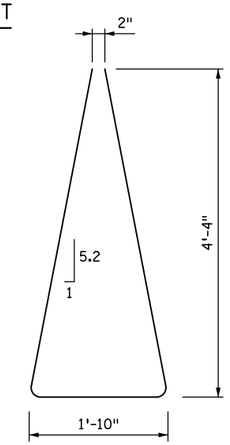

M403E

BILL OF REINFORCEMENT FOR BARRIER

BAR	NO.	LENGTH	SHAPE	LOCATION
M401E		6'-8"		BARRIER DOWEL
M402E		6'-9"		BARRIER DOWEL
M403E		10'-8"		BARRIER VERTICAL
M4__E				BARRIER LONGITUDINAL
M4__E				BARRIER LONGITUDINAL
M4__E				BARRIER LONGITUDINAL
M4__E				BARRIER LONGITUDINAL
M4__E				BARRIER LONGITUDINAL

DESIGNER NOTE
(REMOVE PRIOR TO PLOTTING FINAL PLAN):
VERIFY LENGTH OF BARRIER ON APPROACH PANEL WITH ROADWAY DESIGNER. REFER TO MEMO TO DESIGNERS (2016-01) FOR ADDITIONAL REQUIREMENTS REGARDING BARRIER PLACEMENT.

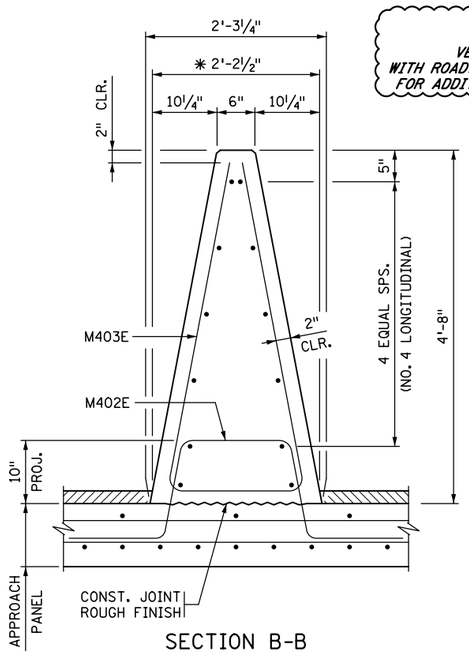

SECTION B-B

CONCRETE APPROACH PANEL.
✱ DIMENSION SHOWN IS TO THE TOP OF THE WEARING COURSE AT GUTTERLINE.

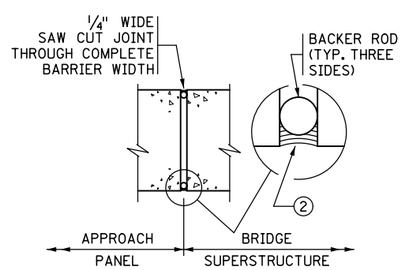

SECTION D-D

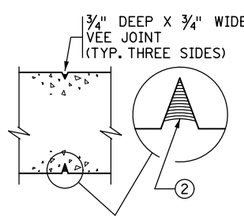

SECTION C-C

CONTRACTOR OPTION 1

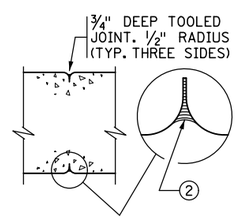

SECTION C-C

CONTRACTOR OPTION 2

CONTROL JOINT DETAILS

WHEN USING SLIP FORM METHOD TO PLACE THE CONCRETE, CUT JOINT 3 INCHES DEEP USING MARGIN TROWEL OR SIMILAR MEANS IMMEDIATELY AFTER CONCRETE PLACEMENT (TYP. THREE SIDES).

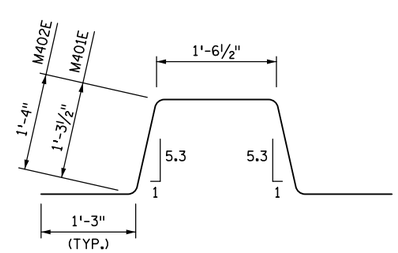

M401E & M402E

GENERAL NOTES

MEASURE PAYMENT LENGTH BETWEEN THE OUTSIDE ENDS OF THE BARRIER FROM THE E8 JOINT.

CONCRETE BARRIER = 970 LBS./FT. (0.240 CU. YDS/FT.)

FINISH ALL EDGES OF BARRIER WITH ½" CHAMFER EXCEPT WHERE OTHERWISE NOTED.

SPACE CONTROL JOINTS AT 10 FT. MAXIMUM. REFER TO SUPERSTRUCTURE SHEET FOR SPECIFIC SPACING INFORMATION.

BARRIER QUANTITIES ARE LISTED IN SUMMARY OF QUANTITIES FOR SUPERSTRUCTURE.

① PLACE BAR ON TOP OF BOTTOM REINFORCEMENT MAT IN DECK.

② JOINT SEALANT PER MnDOT APPROVED/QUALIFIED PRODUCTS LIST - CRACK AND JOINT MATERIALS - SILICONE JOINT SEALERS.

REVISION:

APPROVED: AUGUST 24, 2016
Kevin Western
STATE BRIDGE ENGINEER

CERTIFIED BY _____ LICENSED PROFESSIONAL ENGINEER _____ DATE
NAME: LIC. NO.

TITLE: SOLID MEDIAN BARRIER 54" (TYPE S, TL-4)
INTEGRAL OR SEMI-INTEGRAL ABUTMENT (WITH 2" CONCRETE WEARING COURSE)

DES: DR: CHK: CHK:
SHEET NO. OF SHEETS

FIG. 5-397.149(B)
APPROVED:
BRIDGE NO.

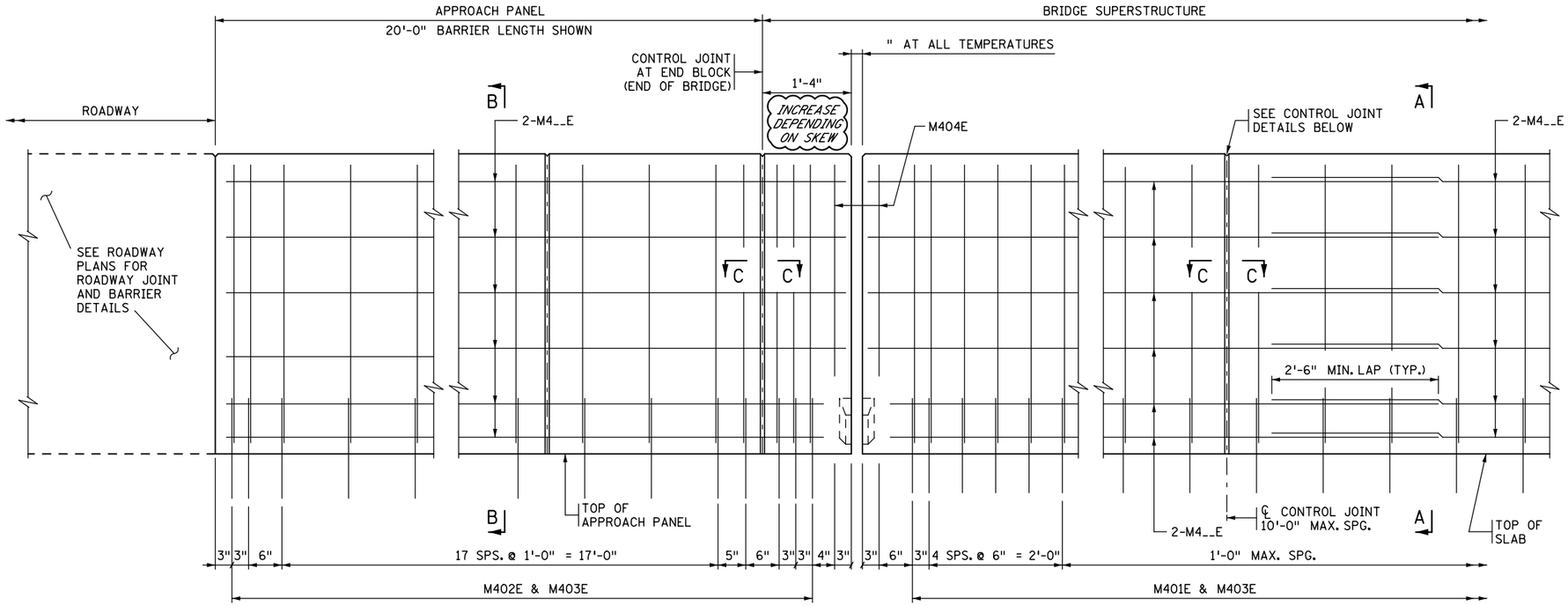

EXPANSION JOINT ③

EXPANSION DEVICE NOT SHOWN

CONTROL JOINT

INSIDE ELEVATION OF BARRIER

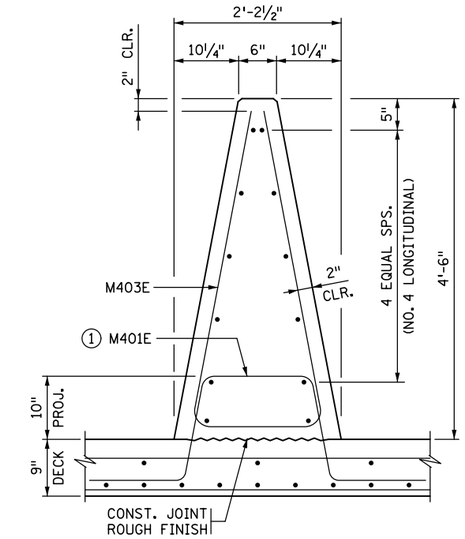

SECTION A-A

BILL OF REINFORCEMENT FOR BARRIER				
BAR	NO.	LENGTH	SHAPE	LOCATION
M401E		7'-0"		BARRIER DOWEL
M402E		7'-1"		BARRIER DOWEL
M403E		10'-3"		BARRIER VERTICAL
M404E		7'-10"		BARRIER VERTICAL
M4__E				BARRIER LONGITUDINAL
M4__E				BARRIER LONGITUDINAL
M4__E				BARRIER LONGITUDINAL
M4__E				BARRIER LONGITUDINAL

DESIGNER NOTE
(REMOVE PRIOR TO PLOTTING FINAL PLAN):
VERIFY LENGTH OF BARRIER ON APPROACH PANEL WITH ROADWAY DESIGNER. REFER TO MEMO TO DESIGNERS (2016-01) FOR ADDITIONAL REQUIREMENTS REGARDING BARRIER PLACEMENT.

BARRIER MEETS NCHRP 350 TL-4 REQUIREMENTS ON BRIDGE DECK AND TL-3 ON APPROACH PANEL.

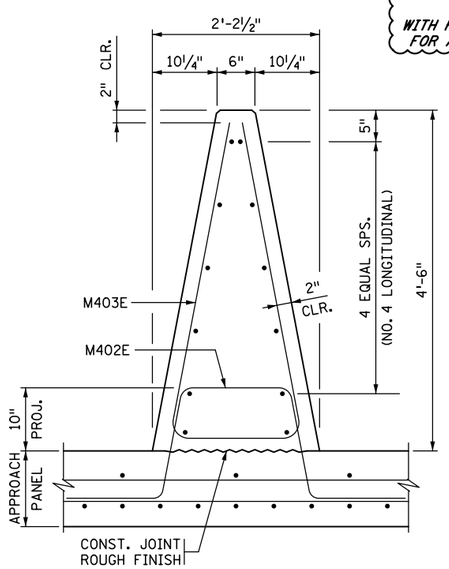

SECTION B-B

CONCRETE APPROACH PANEL

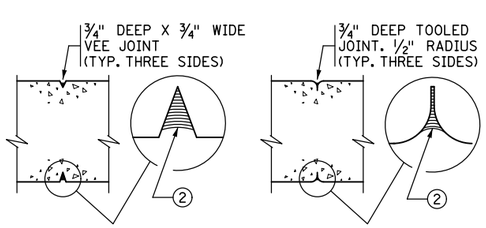

SECTION C-C

CONTRACTOR OPTION 1

SECTION C-C

CONTRACTOR OPTION 2

CONTROL JOINT DETAILS

WHEN USING SLIP FORM METHOD TO PLACE THE CONCRETE, CUT JOINT 3 INCHES DEEP USING MARGIN TROWEL OR SIMILAR MEANS IMMEDIATELY AFTER CONCRETE PLACEMENT (TYP. THREE SIDES).

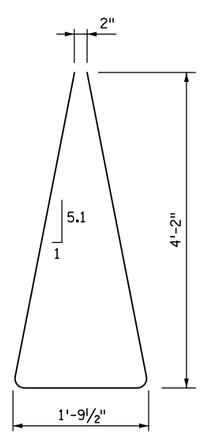

M403E

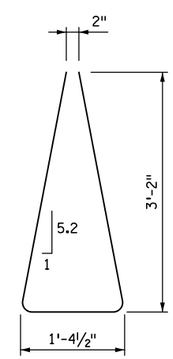

M404E

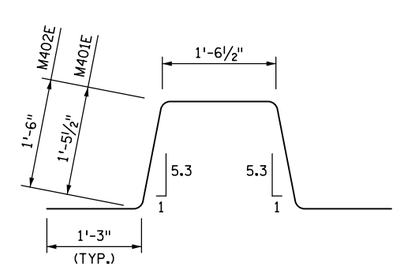

M401E & M402E

GENERAL NOTES

MEASURE PAYMENT LENGTH BETWEEN THE OUTSIDE ENDS OF THE BARRIER FROM THE E8 JOINT.

CONCRETE BARRIER = 914 LBS./FT. (0.226 CU. YDS/FT.)

FINISH ALL EDGES OF BARRIER WITH ½" CHAMFER EXCEPT WHERE OTHERWISE NOTED.

SPACE CONTROL JOINTS AT 10 FT. MAXIMUM. REFER TO SUPERSTRUCTURE SHEET FOR SPECIFIC SPACING INFORMATION.

BARRIER QUANTITIES ARE LISTED IN SUMMARY OF QUANTITIES FOR SUPERSTRUCTURE.

① PLACE BAR ON TOP OF BOTTOM REINFORCEMENT MAT IN DECK.

② JOINT SEALANT PER MnDOT APPROVED/QUALIFIED PRODUCTS LIST - CRACK AND JOINT MATERIALS - SILICONE JOINT SEALERS.

③ REFER TO "WATERPROOF EXPANSION DEVICE" STANDARD PLANS FOR COVER PLATE DETAILS.

REVISION:

APPROVED: AUGUST 24, 2016
Kevin Western
STATE BRIDGE ENGINEER

CERTIFIED BY _____ LICENSED PROFESSIONAL ENGINEER _____ DATE

NAME: LIC. NO.

TITLE: SOLID MEDIAN BARRIER 54" (TYPE S, TL-4)
PARAPET ABUTMENT
(WITHOUT CONCRETE WEARING COURSE)

DES: DR:
CHK: CHK:
SHEET NO. OF SHEETS

APPROVED:

FIG. 5-397.149(C)

BRIDGE NO.

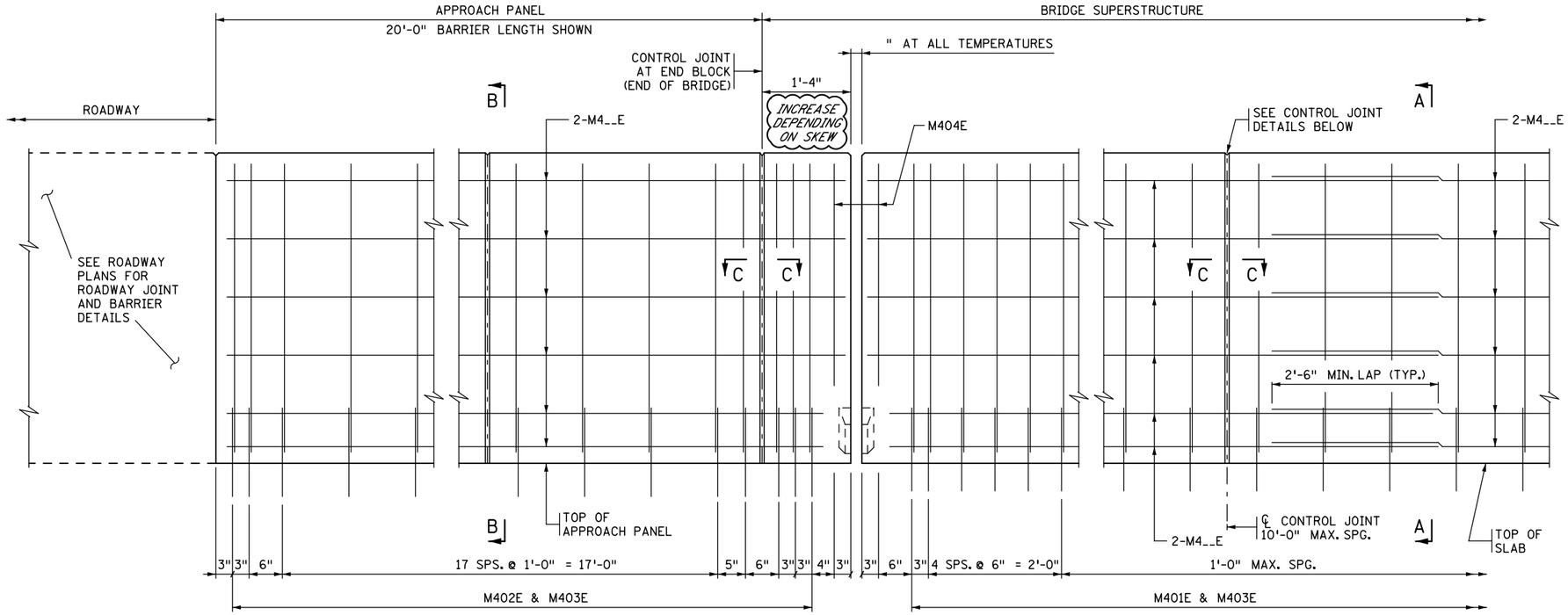

EXPANSION JOINT ③

EXPANSION DEVICE NOT SHOWN

CONTROL JOINT

INSIDE ELEVATION OF BARRIER

CONCRETE WEARING COURSE NOT SHOWN

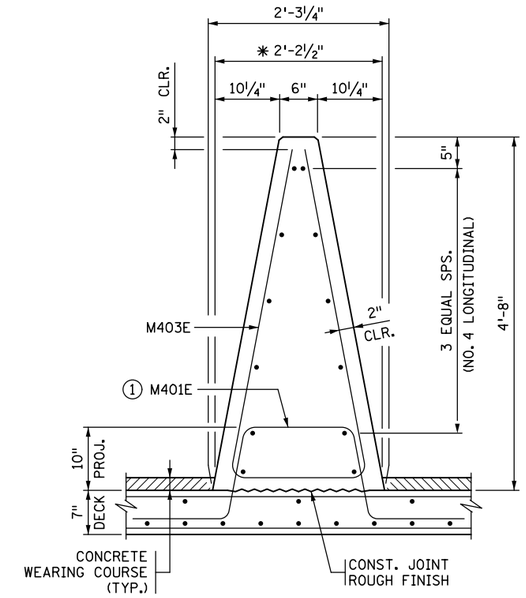

SECTION A-A

✱ DIMENSION SHOWN IS TO THE TOP OF THE WEARING COURSE AT GUTTERLINE.

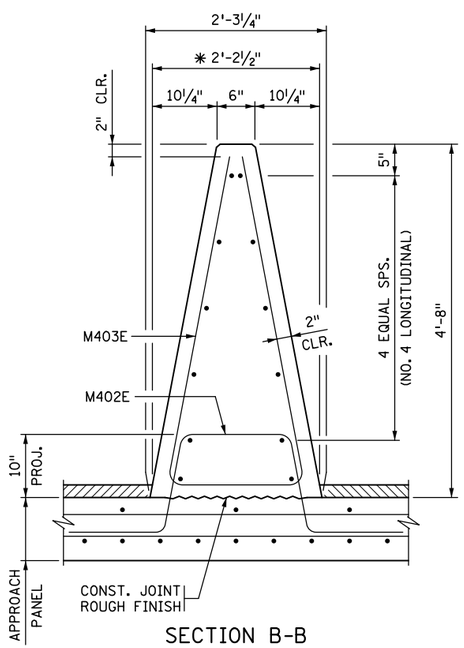

SECTION B-B

CONCRETE APPROACH PANEL.

✱ DIMENSION SHOWN IS TO THE TOP OF THE WEARING COURSE AT GUTTERLINE.

DESIGNER NOTE
(REMOVE PRIOR TO PLOTTING FINAL PLAN):
VERIFY LENGTH OF BARRIER ON APPROACH PANEL WITH ROADWAY DESIGNER. REFER TO MEMO TO DESIGNERS (2016-01) FOR ADDITIONAL REQUIREMENTS REGARDING BARRIER PLACEMENT.

BARRIER MEETS NCHRP 350 TL-4 REQUIREMENTS ON BRIDGE DECK AND TL-3 ON APPROACH PANEL.

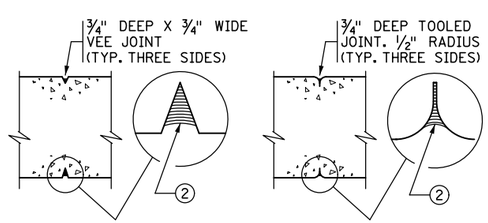

SECTION C-C

CONTRACTOR OPTION 1

SECTION C-C

CONTRACTOR OPTION 2

CONTROL JOINT DETAILS

WHEN USING SLIP FORM METHOD TO PLACE THE CONCRETE, CUT JOINT 3 INCHES DEEP USING MARGIN TROWEL OR SIMILAR MEANS IMMEDIATELY AFTER CONCRETE PLACEMENT (TYP. THREE SIDES).

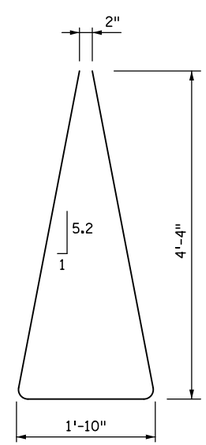

M403E

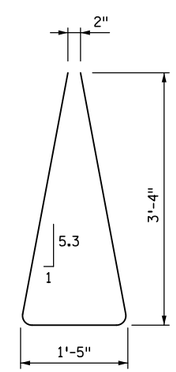

M404E

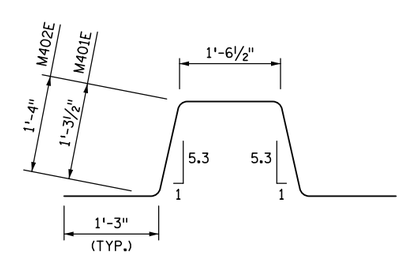

M401E & M402E

BILL OF REINFORCEMENT FOR BARRIER

BAR	NO.	LENGTH	SHAPE	LOCATION
M401E		6'-8"		BARRIER DOWEL
M402E		6'-9"		BARRIER DOWEL
M403E		10'-6"		BARRIER VERTICAL
M404E		8'-2"		BARRIER VERTICAL
M4__E				BARRIER LONGITUDINAL
M4__E				BARRIER LONGITUDINAL
M4__E				BARRIER LONGITUDINAL
M4__E				BARRIER LONGITUDINAL

GENERAL NOTES

MEASURE PAYMENT LENGTH BETWEEN THE OUTSIDE ENDS OF THE BARRIER FROM THE E8 JOINT.

CONCRETE BARRIER = 970 LBS./FT. (0.240 CU. YDS/FT.)

FINISH ALL EDGES OF BARRIER WITH ½" CHAMFER EXCEPT WHERE OTHERWISE NOTED.

SPACE CONTROL JOINTS AT 10 FT. MAXIMUM. REFER TO SUPERSTRUCTURE SHEET FOR SPECIFIC SPACING INFORMATION.

BARRIER QUANTITIES ARE LISTED IN SUMMARY OF QUANTITIES FOR SUPERSTRUCTURE.

① PLACE BAR ON TOP OF BOTTOM REINFORCEMENT MAT IN DECK.

② JOINT SEALANT PER MnDOT APPROVED/QUALIFIED PRODUCTS LIST - CRACK AND JOINT MATERIALS - SILICONE JOINT SEALERS.

③ REFER TO "WATERPROOF EXPANSION DEVICE" STANDARD PLANS FOR COVER PLATE DETAILS.

REVISION:

APPROVED: AUGUST 24, 2016

Kevin Western

STATE BRIDGE ENGINEER

CERTIFIED BY _____ LICENSED PROFESSIONAL ENGINEER _____ DATE

NAME: LIC. NO.

TITLE: SOLID MEDIAN BARRIER 54" (TYPE S, TL-4) PARAPET ABUTMENT (WITH 2" CONCRETE WEARING COURSE)

DES: DR: CHK: CHK:

SHEET NO. OF SHEETS

APPROVED:

FIG. 5-397.149(D)

BRIDGE NO.

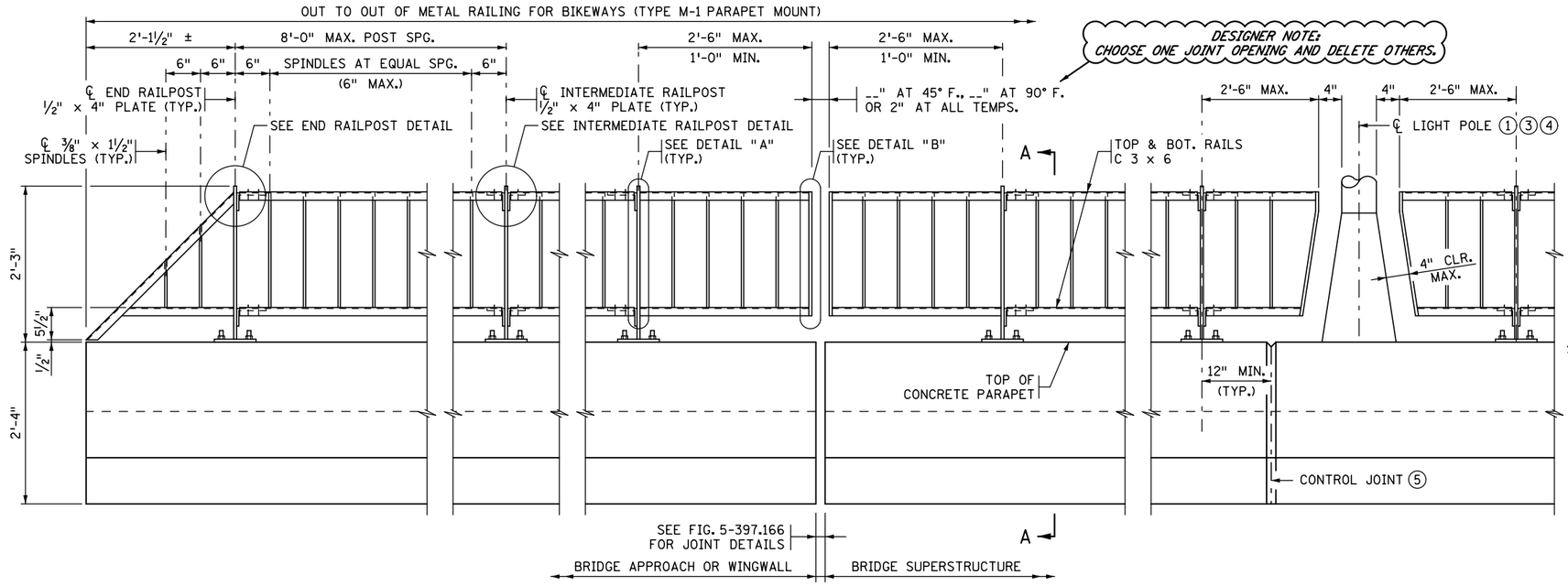

INSIDE ELEVATION OF RAILING

DESIGNER NOTE
(REMOVE PRIOR TO PLOTTING FINAL PLAN):
FOR ROADWAY DESIGN SPEEDS GREATER THAN 35 MPH ORNAMENTAL RAILING MUST BE PROTECTED BY A TRAFFIC BARRIER.

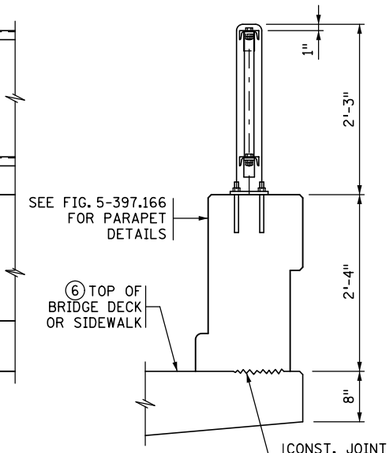

SECTION A-A

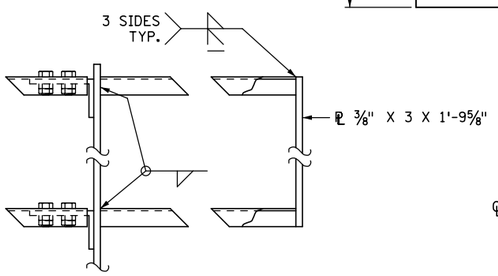

DETAIL "A" DETAIL "B"

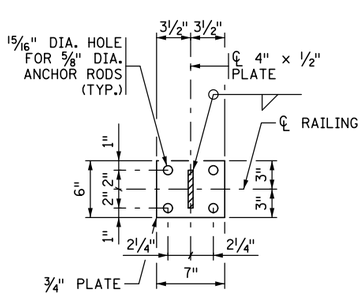

RAILPOST BASE PLATE

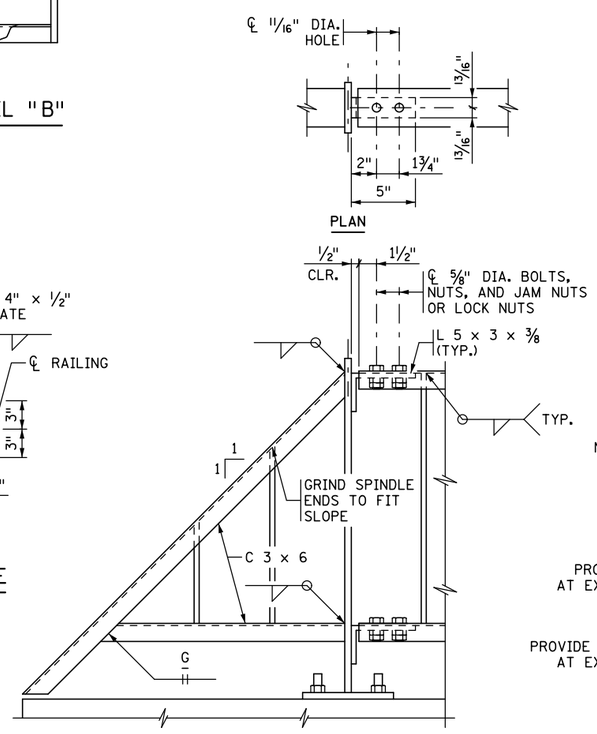

ELEVATION

END RAILPOST DETAIL

TOP AND BOTTOM RAIL CONNECTIONS SIMILAR

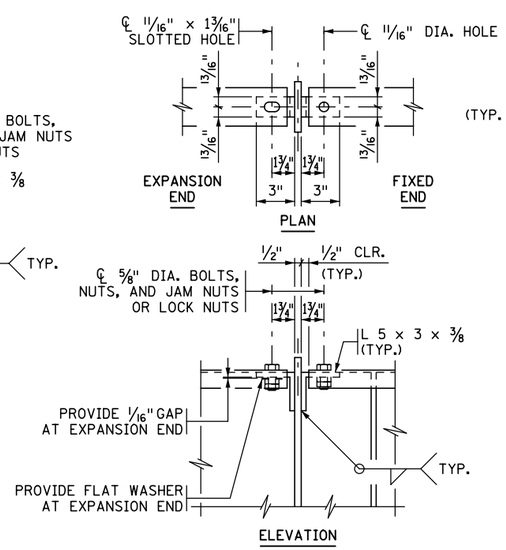

ELEVATION

INTERMEDIATE RAILPOST DETAIL

TOP AND BOTTOM RAIL CONNECTIONS SIMILAR

DESIGNER NOTE
(REMOVE PRIOR TO PLOTTING FINAL PLAN):
DESIGNER SHALL CONSULT WITH BRIDGE OFFICE ARCHITECTURAL SPECIALIST. CHANGE NOTE ACCORDINGLY.

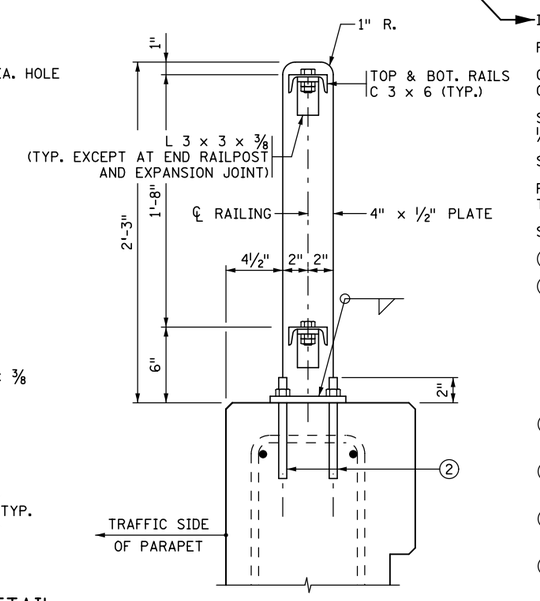

TYPICAL RAILPOST

SPINDLE NOT SHOWN

GENERAL NOTES

CONTINUOUSLY GROUND ALL METAL RAILINGS; SEE SPECIAL PROVISIONS. REFER TO THE ELECTRICAL PLANS AND ELECTRICAL SPECIAL PROVISIONS FOR DETAILS REGARDING BONDING MULTIPLE ELECTRICAL GROUNDING SYSTEMS.

MEASURE PAYMENT LENGTH AS THE OUT TO OUT LENGTH ALONG THE CENTERLINE OF THE RAILING BETWEEN THE OUTSIDE ENDS.

INSTALL RAIL POSTS AND SPINDLES [NORMAL TO GRADE OR PLUMB.]

PROVIDE STRUCTURAL STEEL PER SPEC. 3306.

GALVANIZE BOLTS, NUTS, WASHERS AND ANCHORS PER SPEC. 3392. GALVANIZE ALL OTHER STRUCTURAL STEEL PER SPEC. 3394, AFTER FABRICATION.

STRAIGHTEN ALL RAILING MEMBERS AFTER FABRICATION AND GALVANZING TO WITHIN ⅛" IN 10 FT. BY MECHANICAL MEANS WITHOUT DAMAGE TO ZINC COATING.

SEE SPECIAL PROVISIONS FOR PAINT TO BE APPLIED TO METAL RAILING.

PRICE BID FOR METAL RAILING INCLUDES ANCHORAGES AND ALL MATERIAL ABOVE TOP OF CONCRETE PARAPET.

SEE SPECIAL PROVISIONS FOR REQUIREMENTS NOT INCLUDED ON THIS SHEET.

1. SEE STANDARD BRIDGE DETAIL B950 FOR LIGHT POLE ANCHORAGE IF REQUIRED
2. ADHESIVE ANCHORAGE WITH ⅝" DIA. ANCHOR ROD PER SPEC. 3385, TYPE A WITH HEX NUT AND WASHER. PROVIDE AN ADHESIVE WITH A MINIMUM CHARACTERISTIC BOND STRENGTH IN UNCRACKED CONCRETE OF 1.5 KSI. EMBED THE ANCHORAGE NO LESS THAN 5" REGARDLESS OF CHARACTERISTIC BOND STRENGTH. DRILL THROUGH REINFORCEMENT (IF ENCOUNTERED) TO ACHIEVE MINIMUM EMBEDMENT. ENSURE HEX NUT IS IN CONTACT WITH THE ADJACENT SURFACE AND TORQUE TO 60 FT-LBS UNLESS A HIGHER TORQUE IS RECOMMENDED BY THE MANUFACTURER. PROOF LOAD TO 6.9 KIPS. SEE SPECIAL PROVISIONS FOR ADDITIONAL REQUIREMENTS.
3. IF LIGHT POLE IS MOUNTED ON BLISTER, RAILING MAY BE CONTINUOUS IN FRONT OF LIGHT POLE (SEE PARAPET & LIGHT POLE DETAILS).
4. COORDINATE LIGHT POLE DETAILS WITH THE RAILING FABRICATOR TO ENSURE PROPER CLEARANCES AND RAILING CONFIGURATION ADJACENT TO THE POLE.
5. SEE SUPERSTRUCTURE SHEETS AND STANDARD FIGURE 5-397.166 FOR CONTROL JOINT SPACING AND DETAILS.
6. IF TOP OF RAISED SIDEWALK, SEE SECTION D-D ON STANDARD FIGURE 5-397.166.

REVISED:	CERTIFIED BY ____ LICENSED PROFESSIONAL ENGINEER ____ DATE	TITLE: METAL RAILING (TYPE M-1) FOR BIKEWAYS ON CONCRETE PARAPET (TYPE P-1)	DES: / DR:	APPROVED:	FIG. 5-397.154
APPROVED: DECEMBER 02, ~~2015~~	NAME: LIC. NO.		CHK: / CHK:		BRIDGE NO.
STATE BRIDGE ENGINEER			SHEET NO. OF SHEETS		

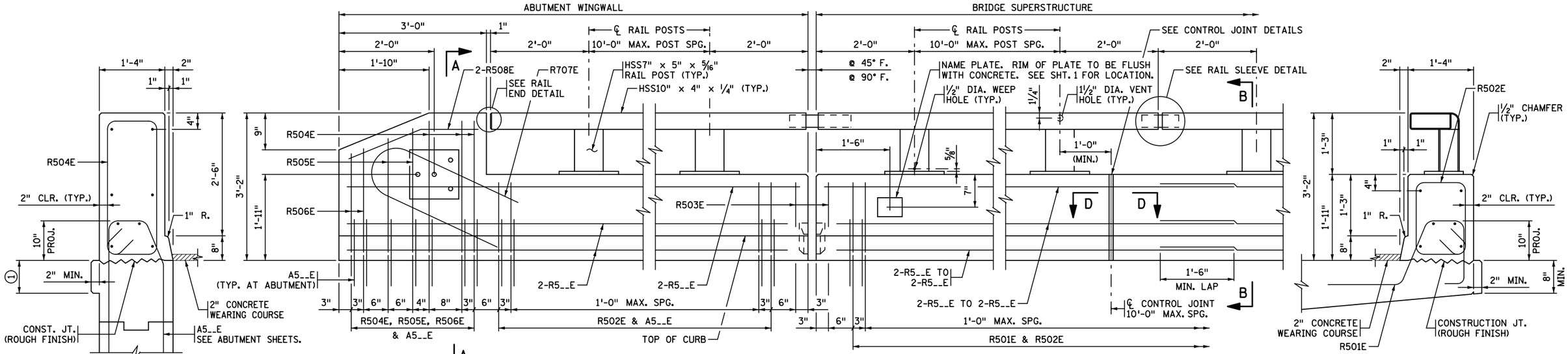

SECTION A-A

EXPANSION JOINT

DEVICE NOT SHOWN

CONTROL JOINT

SECTION B-B

INSIDE ELEVATION OF RAILING

CONCRETE WEARING COURSE NOT SHOWN

RAIL MEETS TEST LEVEL 4 REQUIREMENTS OF NCHRP REPORT 350

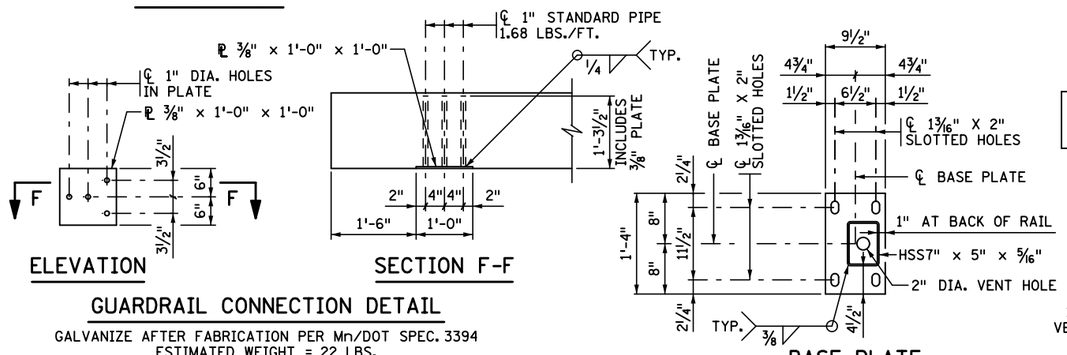

ELEVATION

SECTION F-F

GUARDRAIL CONNECTION DETAIL

GALVANIZE AFTER FABRICATION PER Mn/DOT SPEC. 3394
ESTIMATED WEIGHT = 22 LBS.

BASE PLATE

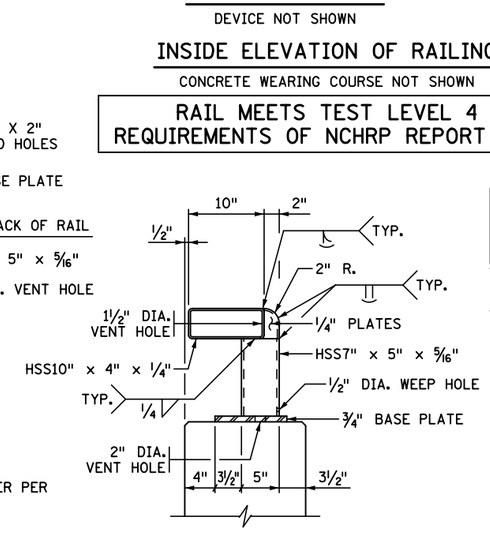

STRUCTURAL TUBE RAIL DETAIL

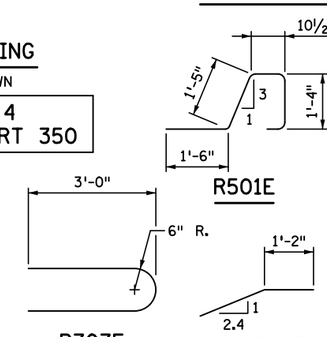

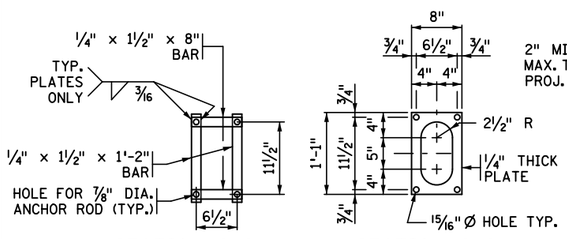

SECTION G-G

ANCHOR BAR ALTERNATE

SECTION G-G

ANCHOR PLATE ALTERNATE

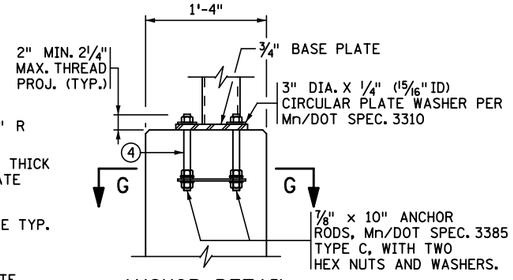

ANCHOR DETAIL

R502E, R503E, R504E, R505E & R506E

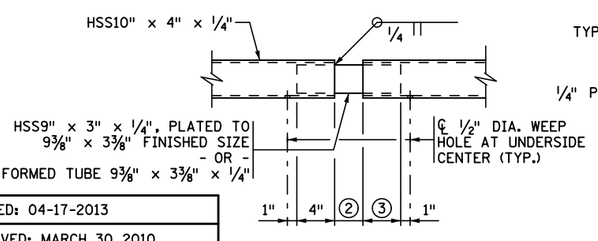

RAIL SLEEVE DETAIL

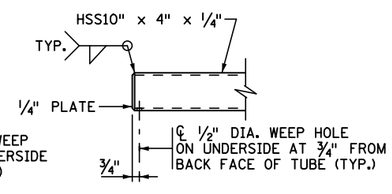

RAIL END DETAIL

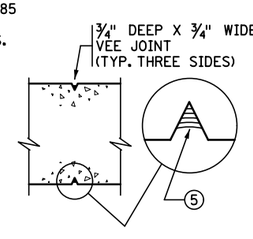

SECTION D-D

CONTROL JOINT DETAILS

BILL OF REINFORCEMENT FOR PARAPET

BAR	NO.	LENGTH	SHAPE	LOCATION
R501E		5'-7"	BENT	PARAPET VERTICAL
R502E		6'-1"	BENT	PARAPET VERTICAL
R503E		4'-11"	BENT	PARAPET VERTICAL
R504E		8'-7"	BENT	PARAPET VERTICAL
R505E	SER. OF 2	7'-11" TO 8'-3"	BENT	PARAPET VERTICAL
R506E	SER. OF 2	7'-3" TO 7'-5"	BENT	PARAPET VERTICAL
R707E		6'-7"	BENT	PARAPET END
R508E		2'-9"	BENT	PARAPET END LONGIT.
R509E			——	PARAPET LONGITUDINAL
R510E			——	PARAPET LONGITUDINAL
R511E			——	PARAPET LONGITUDINAL
R512E			——	PARAPET LONGITUDINAL

GENERAL NOTES

FOR PAYMENT OF "TYPE P-2 (TL-4) BARRIER CONCRETE (3Y46 OR 3Y46A)" MEASURE LENGTH OF CONCRETE BARRIER BETWEEN END FACES. CONCRETE PARAPET = 396 LBS./FT. (0.098 CU. YDS./FT.)

FOR PAYMENT OF "STRUCTURAL TUBE RAILING DESIGN T-1" MEASURE LENGTH OF RAIL FROM END TO END OF TUBING. DO NOT DEDUCT FOR JOINTS.

FINISH ALL EDGES OF RAIL WITH 1/2" CHAMFER, EXCEPT WHERE OTHERWISE NOTED.

MAX. SPACING OF CONCRETE CONTROL JOINTS SHALL BE 10 FT.

PROVIDE CORRECT ALIGNMENT FOR ANCHORAGES BY PLACING THEM ACCURATELY AND NORMAL TO GRADE. SEE SPECIAL PROVISIONS.

PROVIDE STRUCTURAL STEEL AND PLATE WASHERS PER Mn/DOT SPEC. 3310. PROVIDE STRUCTURAL TUBES PER A.S.T.M. A500, GRADE B AS SPECIFIED IN Mn/DOT SPEC. 3361.

GALVANIZE BOLTS, NUTS, AND WASHERS PER Mn/DOT SPEC. 3392.

GALVANIZE ALL OTHER STRUCTURAL STEEL PER Mn/DOT SPEC. 3394, AFTER FABRICATION.

PROVIDE GUARDRAIL CONNECTION STRUCTURAL STEEL PER Mn/DOT SPEC. 3306.

GUARDRAIL CONNECTION AND NAME PLATE IS INCIDENTAL TO "TYPE P-2 (TL-4) BARRIER CONCRETE (3Y46 OR 3Y46A)".

PRICE BID FOR "STRUCTURAL TUBE RAILING DESIGN T-1" INCLUDES ANCHORAGES AND ALL MATERIAL ABOVE TOP OF CONCRETE BARRIER.

ALL MATERIAL IN THE CONCRETE BARRIER IS LISTED IN SUMMARY OF QUANTITIES FOR SUPERSTRUCTURE.

SEE SPECIAL PROVISIONS FOR PAINT REQUIREMENTS.

CONTINUOUSLY GROUND THE METAL RAILING AS DIRECTED IN THE SPECIAL PROVISIONS. REFER TO THE ELECTRICAL PLANS AND ELECTRICAL SPECIAL PROVISIONS FOR DETAILS REGARDING BONDING MULTIPLE ELECTRICAL GROUNDING SYSTEMS.

1. MAKE THICKNESS THE SAME AS SLAB IN SECTION B-B.
2. 1" AT RAILING JOINTS. AT EXPANSION JOINTS, MAKE 1" LARGER THAN GAP IN EXPANSION JOINTS.
3. 5" AT RAILING JOINTS AND 8" AT EXPANSION JOINTS.
4. SUBSTITUTION OF CHEMICAL ANCHOR RODS FOR CAST-IN-PLACE ANCHORAGE IS NOT PERMITTED.
5. SEE SPECIAL PROVISIONS FOR JOINT SEALING REQUIREMENTS.

REVISED: 04-17-2013

APPROVED: MARCH 30, 2010

STATE BRIDGE ENGINEER

CERTIFIED BY _____ LICENSED PROFESSIONAL ENGINEER _____ DATE

NAME: LIC. NO.

TITLE: STRUCTURAL TUBE RAILING (DESIGN T-1) AND CONCRETE PARAPET (TYPE P-2, TL-4) (WITH INTEGRAL END POST)

DES: DR: CHK: CHK:

SHEET NO. OF SHEETS

APPROVED:

FIG. 5-397.157

BRIDGE NO.

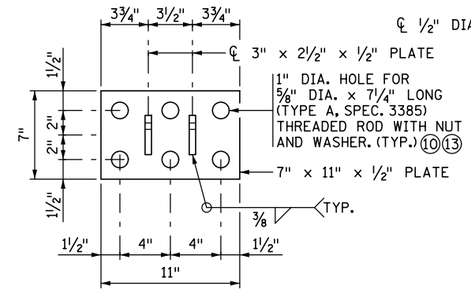

CABLE ANCHOR PLATE DETAIL

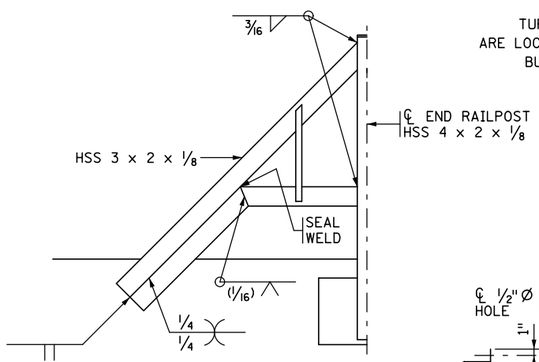

WELDS AT END PANEL

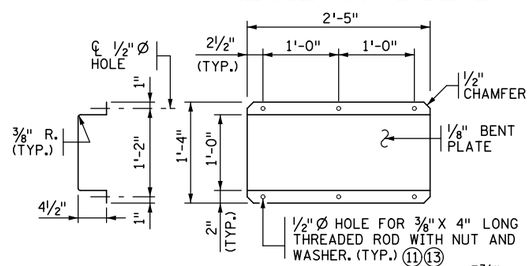

COVER PLATE DETAIL

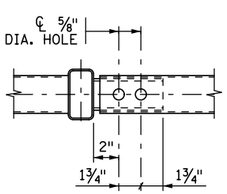

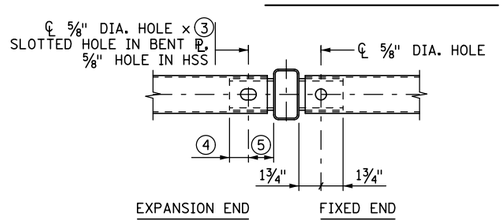

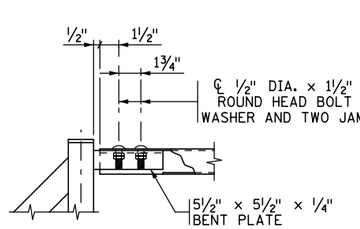

END RAILPOST DETAIL

TOP AND BOTTOM RAIL CONNECTIONS ARE SIMILAR

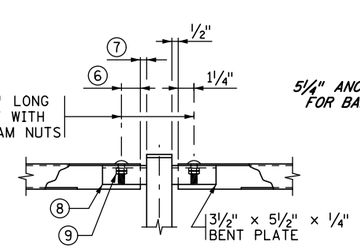

INTERMEDIATE RAILPOST DETAIL

TOP AND BOTTOM RAIL CONNECTIONS ARE SIMILAR

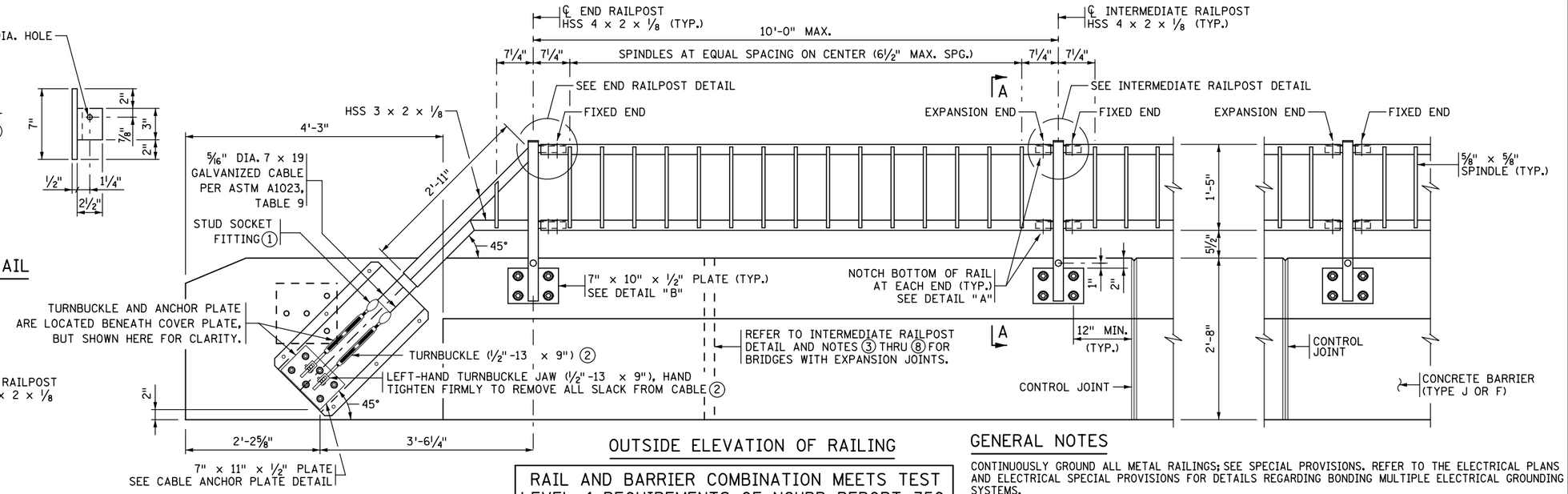

OUTSIDE ELEVATION OF RAILING

RAIL AND BARRIER COMBINATION MEETS TEST LEVEL 4 REQUIREMENTS OF NCHRP REPORT 350.

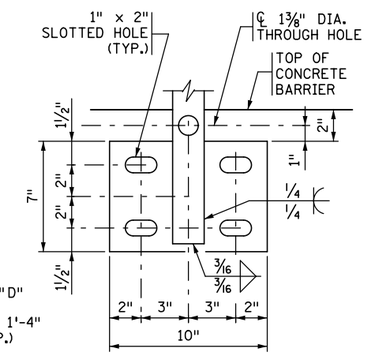

DETAIL "B"

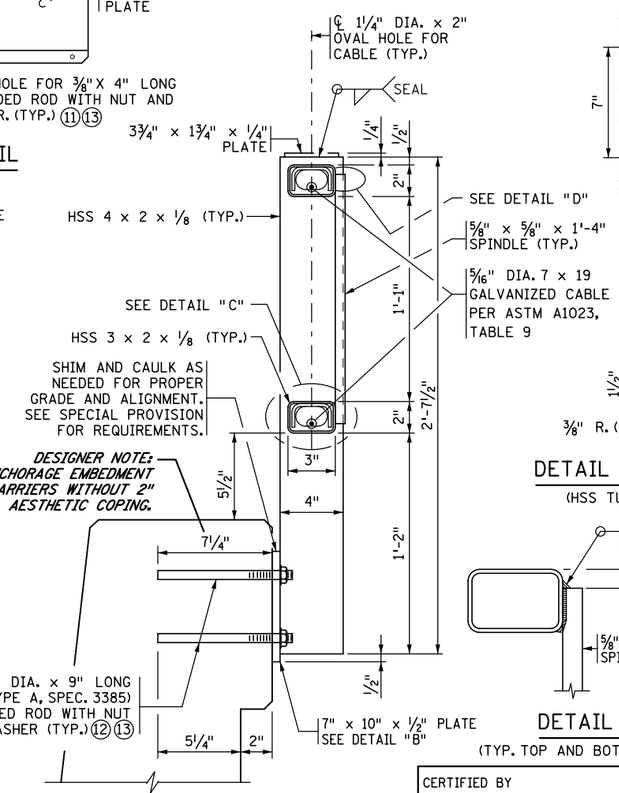

SECTION A-A

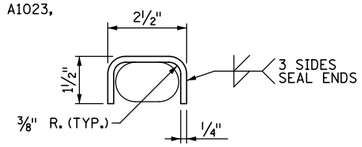

DETAIL "C" - BENT PLATE

(HSS TUBE RAIL NOT SHOWN)

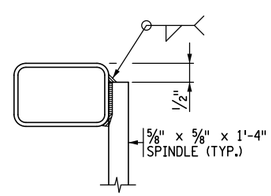

DETAIL "D"

(TYP. TOP AND BOTTOM RAIL)

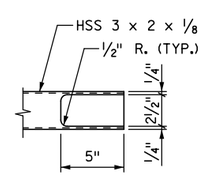

DETAIL "A"

GENERAL NOTES

CONTINUOUSLY GROUND ALL METAL RAILINGS; SEE SPECIAL PROVISIONS. REFER TO THE ELECTRICAL PLANS AND ELECTRICAL SPECIAL PROVISIONS FOR DETAILS REGARDING BONDING MULTIPLE ELECTRICAL GROUNDING SYSTEMS.

REFER TO SUPERSTRUCTURE AND CONCRETE BARRIER SHEETS FOR ADDITIONAL DETAILS AND RAILPOST AND/OR CONTROL JOINT SPACING.

MEASURE PAYMENT LENGTH OF "STRUCTURAL TUBE RAILING (DESIGN T-2)" FROM CABLE ANCHOR PLATE TO CABLE ANCHOR PLATE.

PROVIDE A500, GRADE B STRUCTURAL STEEL TUBING. PROVIDE ALL OTHER STRUCTURAL STEEL PER SPEC. 3306.

GALVANIZE THREADED RODS, BOLTS, NUTS AND WASHERS PER SPEC. 3392. GALVANIZE ALL OTHER STRUCTURAL STEEL PER SPEC. 3394 AFTER FABRICATION. SEAL WELD ALL SURFACES PRIOR TO GALVANIZING.

STRAIGHTEN ALL RAILING MEMBERS AFTER FABRICATION AND GALVANIZING TO WITHIN ⅛" IN 10 FT. BY MECHANICAL MEANS WITHOUT DAMAGE TO ZINC COATING.

INSTALL RAILPOSTS AND SPINDLES NORMAL TO GRADE.

TURNBUCKLE COVER PLATE, ALL STRUCTURAL STEEL, THREADED ROD, AND EXPOSED BOLTS, NUTS AND WASHERS ARE TO BE PAINTED AFTER GALVANIZING IN ACCORDANCE WITH THE SPECIAL PROVISIONS. TURNBUCKLE COVER PLATE PAINT COLOR TO MATCH CONCRETE SURFACE TREATMENT.

① ½" X 13 COARSE THREAD GALVANIZED FORGED ELECTROLINE STUD SOCKET ASSEMBLY WITH PLUG & SLEEVE, GD-331-X, EXTRA IMPROVED PLOW STEEL WITH MIN. BREAKING STRENGTH OF 10,540 LBS.

② GALVANIZED JAW AND JAW TURNBUCKLE PER ASTM F1145 TYPE 1, GRADE 1 WITH MIN. BREAKING STRENGTH OF 11,000 LBS. USE ONE TURNBUCKLE ON EACH END OF EACH CABLE.

③ 1¼" (AT TYP. EXP. END) OR 3" (AT EXP. END AT EXPANSION JOINT)

④ 1½" (AT TYP. EXP. END) OR 2½" (AT EXP. END AT EXPANSION JOINT)

⑤ 2" (AT TYP. EXP. END) OR 3" (AT EXP. END AT EXPANSION JOINT)

⑥ 1½" (AT TYP. EXP. END) OR 2½" (AT EXP. END AT EXPANSION JOINT)

⑦ ½" (AT TYP. EXP. END) OR 1½" (AT EXP. END AT EXPANSION JOINT)

⑧ 3½" × 5½" × ¼" BENT PLATE (AT TYP. EXP. END)
5½" × 6½" × ¼" BENT PLATE (AT EXP. END AT EXPANSION JOINT)

⑨ AT EXPANSION END PROVIDE 1/16" GAP BETWEEN UNDERSIDE OF BENT PLATE AND UPPER NUT TO ALLOW LATERAL MOVEMENT OF THE RAIL.

⑩ 5" MINIMUM EMBEDMENT, TORQUE TO 30 FT. LBS.

⑪ 3" MINIMUM EMBEDMENT, TORQUE TO 20 FT. LBS.

⑫ 7¼" MINIMUM EMBEDMENT, TORQUE TO 80 FT. LBS.

⑬ ADHESIVE ANCHORAGE WITH ANCHOR ROD PER SPEC. 3385, TYPE A WITH HEX NUT AND WASHER. PROVIDE AN ADHESIVE WITH A MINIMUM CHARACTERISTIC BOND STRENGTH IN UNCRACKED CONCRETE OF 1.5 KSI. EMBED THE ANCHORAGE NO LESS THAN EMBEDMENT SHOWN REGARDLESS OF CHARACTERISTIC BOND STRENGTH. DRILL THROUGH REINFORCEMENT (IF ENCOUNTERED) TO ACHIEVE MINIMUM EMBEDMENT. ENSURE HEX NUT IS IN CONTACT WITH THE ADJACENT SURFACE AND TORQUE TO VALUE SHOWN UNLESS A HIGHER TORQUE IS RECOMMENDED BY THE MANUFACTURER. SEE SPECIAL PROVISIONS FOR ADDITIONAL REQUIREMENTS.

REVISED:

APPROVED: DECEMBER 02, 2015
Beverly A. E. Sanchez
STATE BRIDGE ENGINEER

CERTIFIED BY
LICENSED PROFESSIONAL ENGINEER DATE
NAME: LIC. NO.

TITLE: STRUCTURAL TUBE RAILING (DESIGN T-2)
FOR CONCRETE J OR F BARRIER

DES:	DR:	APPROVED:	FIG. 5-397.158
CHK:	CHK:		BRIDGE NO.
SHEET NO. OF SHEETS			

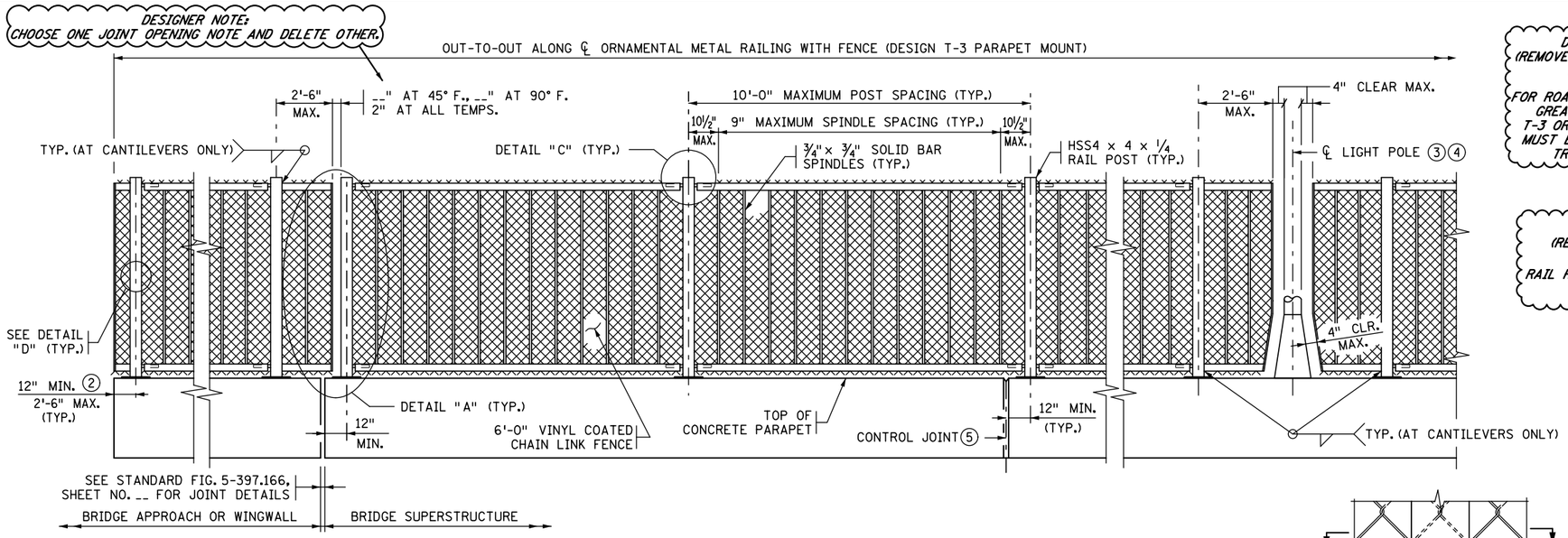

PARTIAL ELEVATION OF ORNAMENTAL METAL RAILING WITH FENCE (DESIGN T-3)

DESIGNER NOTE
(REMOVE PRIOR TO PLOTTING FINAL PLAN):
FOR ROADWAY DESIGN SPEEDS GREATER THAN 35 MPH T-3 ORNAMENTAL RAILINGS MUST BE PROTECTED BY A TRAFFIC BARRIER.

DESIGNER NOTE
(REMOVE PRIOR TO PLOTTING FINAL PLAN):
RAIL HEIGHTS GREATER THAN SHOWN REQUIRE REDESIGN.

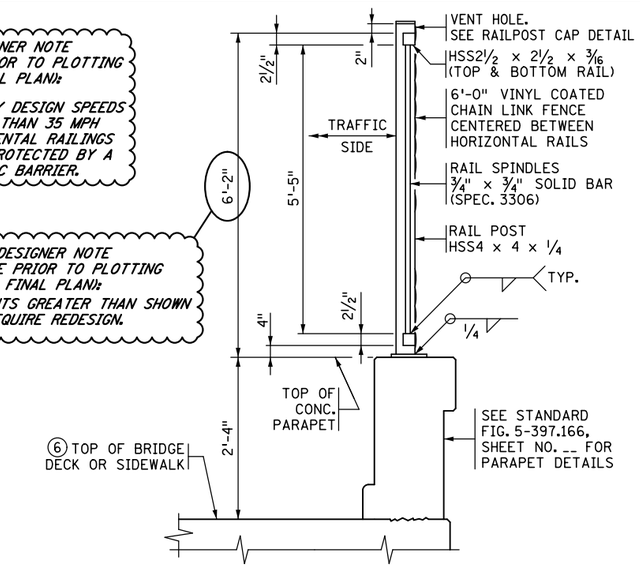

SECTION THROUGH RAILING

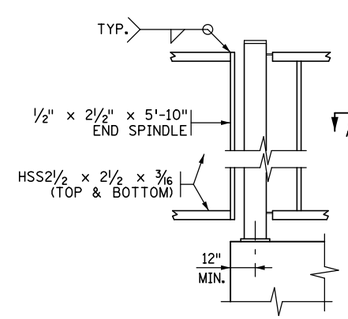

DETAIL "A"

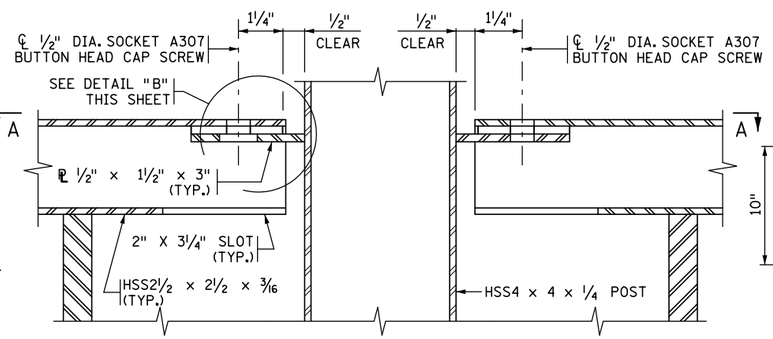

DETAIL "C"

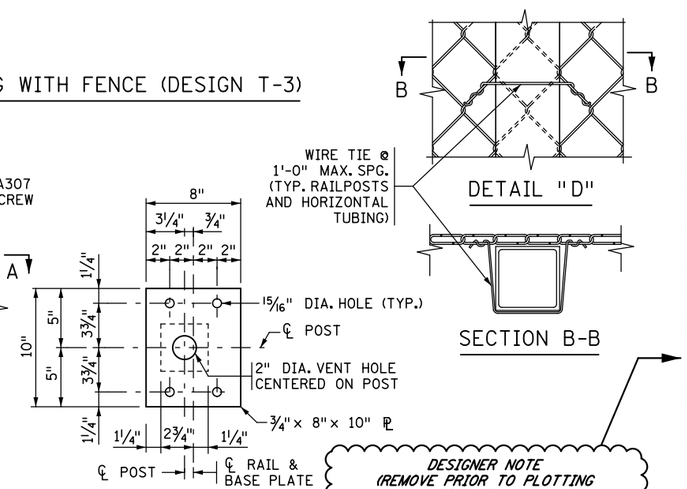

DETAIL "D"

SECTION B-B

BASE PLATE

DESIGNER NOTE
(REMOVE PRIOR TO PLOTTING FINAL PLAN):
DESIGNER SHALL CONSULT WITH BRIDGE OFFICE ARCHITECTURAL SPECIALIST. CHANGE NOTE ACCORDINGLY.

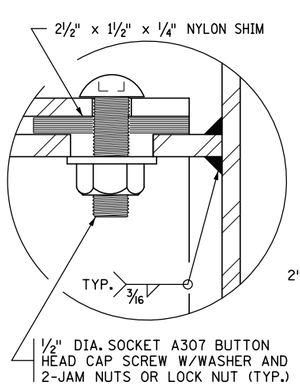

DETAIL "B"

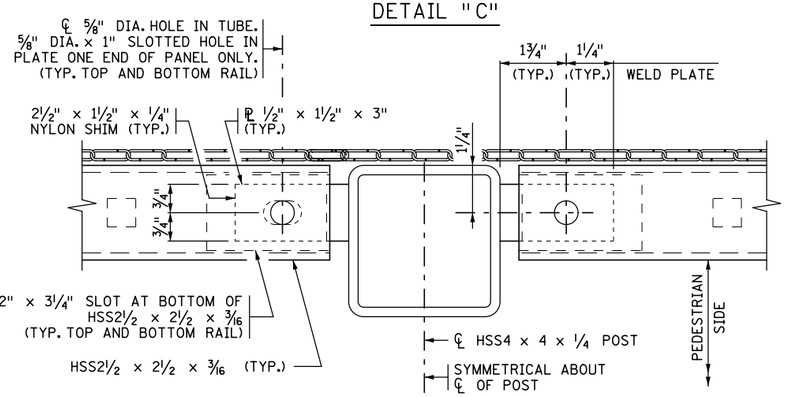

SECTION A-A

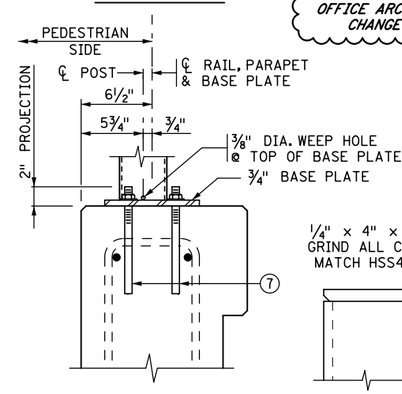

ANCHOR DETAIL

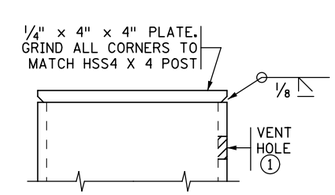

RAILPOST CAP DETAIL

GENERAL NOTES

CONTINUOUSLY GROUND ALL METAL RAILINGS; SEE THE SPECIAL PROVISIONS. REFER TO THE ELECTRICAL PLANS AND ELECTRICAL SPECIAL PROVISIONS FOR DETAILS REGARDING BONDING MULTIPLE ELECTRICAL GROUNDING SYSTEMS.

PAYMENT LENGTH SHALL BE MEASURED AS THE OUT TO OUT LENGTH ALONG THE CENTERLINE OF THE RAILING BETWEEN THE OUTSIDE ENDS, WITH DEDUCTIONS FOR THE LENGTH OF CONCRETE POSTS, IF PRESENT.

USE A500, GRADE B STRUCTURAL STEEL TUBING (HSS) IN THE RAIL CONFORMING TO SPEC. 3361. ALL OTHER STEEL SHALL CONFORM TO SPEC. 3306.

GALVANIZE BOLTS, NUTS, WASHERS AND ANCHORS PER SPEC. 3392. GALVANIZE ALL OTHER STRUCTURAL STEEL PER SPEC. 3394, AFTER FABRICATION.

COAT THE GALVANIZED RAILING, BASE PLATES, AND PROTRUDING PORTIONS OF BOLTS, NUTS, ANCHORS, AND WASHERS.

INSTALL RAIL POSTS AND SPINDLES [NORMAL TO GRADE OR PLUMB.]

CURVE HORIZONTAL RAILS WHERE APPLICABLE AND PLACE RAILS PARALLEL TO THE EDGE OF SIDEWALK PROFILE.

ALWAYS USE CHAIN LINK FENCE WITH THIS RAILING. REFER TO SPEC. 2557 FOR CHAIN LINK FABRIC AND TIE REQUIREMENTS.

SEE SPECIAL PROVISIONS FOR REQUIREMENTS NOT INCLUDED ON THIS SHEET.

DRILL ½" DIA. MAX. VENT HOLES ON THE UNDERSIDE OF RAIL TUBES AS NECESSARY TO FACILITATE GALVANIZING.

① DRILL VENT HOLE IN THE RAIL POST WITHIN 2" OF THE UNDERSIDE OF THE CAP, ON THE NON-TRAFFIC SIDE OF THE POST AS NECESSARY TO FACILITATE GALVANIZING. MAXIMUM HOLE SIZE IS ½" DIA.

② PLACE ℄ OF END POST 12" FROM END OF CONCRETE PARAPET IF GUARDRAIL CONNECTION PLATE IS PRESENT.

③ IF LIGHT POLE IS MOUNTED ON BLISTER, RAILING MAY BE CONTINUOUS IN FRONT OF LIGHT POLE (SEE PARAPET & LIGHT POLE DETAILS).

④ CONTRACTOR TO COORDINATE LIGHT POLE DETAILS WITH THE RAILING FABRICATOR TO ENSURE PROPER CLEARANCES AND RAILING CONFIGURATION ADJACENT TO THE POLE.

⑤ SEE SUPERSTRUCTURE SHEETS AND STANDARD FIGURE 5-397.166 FOR CONTROL JOINT SPACING AND DETAILS.

⑥ IF TOP OF RAISED SIDEWALK, SEE SECTION D-D ON STANDARD FIGURE 5-397.166.

⑦ ADHESIVE ANCHORAGE WITH ⅝" DIA. ANCHOR ROD PER SPEC. 3385, TYPE A WITH HEX NUT AND WASHER. PROVIDE AN ADHESIVE WITH A MINIMUM CHARACTERISTIC BOND STRENGTH IN UNCRACKED CONCRETE OF 1.5 KSI. EMBED THE ANCHORAGE NO LESS THAN 6" REGARDLESS OF CHARACTERISTIC BOND STRENGTH. DRILL THROUGH REINFORCEMENT (IF ENCOUNTERED) TO ACHIEVE MINIMUM EMBEDMENT. ENSURE HEX NUT IS IN CONTACT WITH THE ADJACENT SURFACE AND TORQUE TO 60 FT-LBS UNLESS A HIGHER TORQUE IS RECOMMENDED BY THE MANUFACTURER. PROOF LOAD TO 7.7 KIPS. SEE SPECIAL PROVISIONS FOR ADDITIONAL REQUIREMENTS.

REVISION: 11-20-2014

APPROVED: NOVEMBER 6, 2013

Nancy Daubenberger
STATE BRIDGE ENGINEER

CERTIFIED BY _____ LICENSED PROFESSIONAL ENGINEER _____ DATE

NAME: LIC. NO.

TITLE: ORNAMENTAL METAL RAILING WITH FENCE (DESIGN T-3 PARAPET MOUNT)

DES:	DR:	APPROVED:	FIG. 5-397.160
CHK:	CHK:		BRIDGE NO.
SHEET NO. OF SHEETS			

DESIGNER NOTE:
CHOOSE ONE JOINT OPENING NOTE AND DELETE OTHER.

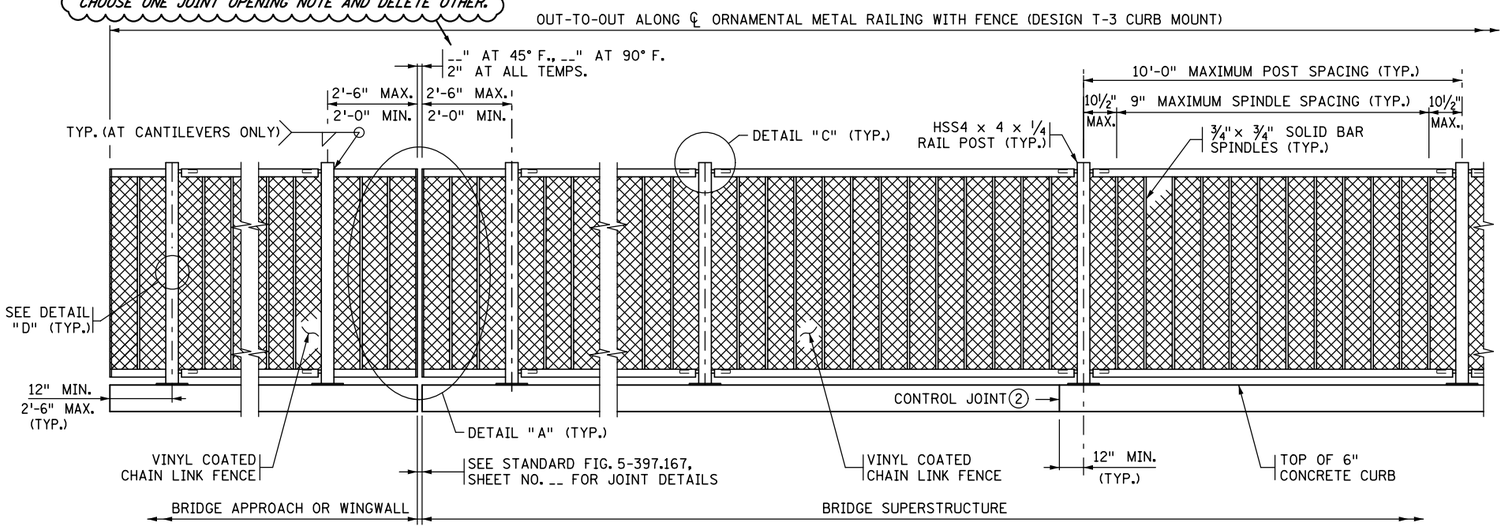

PARTIAL ELEVATION OF ORNAMENTAL METAL RAILING WITH FENCE (DESIGN T-3)

RAILING HEIGHT TABLE			
NOMINAL HEIGHT	A	B	C
4'-6"	4'-0"	3'-3"	3'-6"
6'-0"	5'-6"	4'-9"	5'-0"
8'-0"	7'-6"	6'-9"	7'-0"

DESIGNER NOTE
(REMOVE PRIOR TO PLOTTING FINAL PLAN):
CHOOSE ONE HEIGHT FROM RAILING HEIGHT TABLE ABOVE AND CROSS OUT OTHER HEIGHTS.
RAIL HEIGHTS GREATER THAN SHOWN REQUIRE REDESIGN.

DESIGNER NOTE
(REMOVE PRIOR TO PLOTTING FINAL PLAN):
T-3 ORNAMENTAL METAL RAILINGS MOUNTED ON A CURB MUST BE PROTECTED BY A TRAFFIC BARRIER.

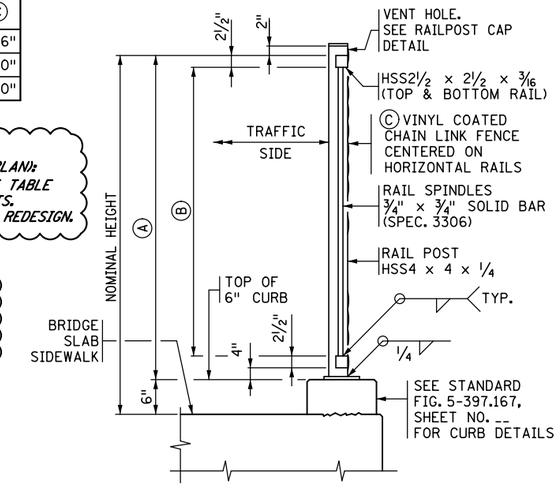

SECTION THROUGH CURB

(8'-0" TALL OPTION SHOWN)

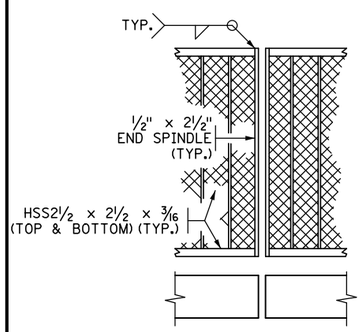

DETAIL "A"

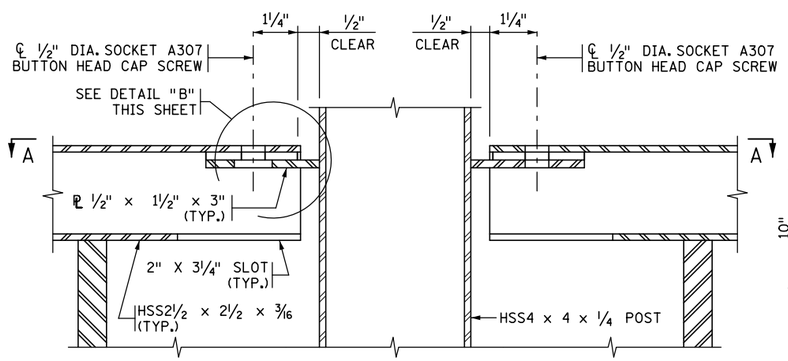

DETAIL "C"

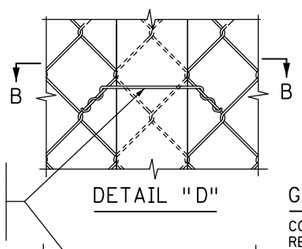

DETAIL "D"

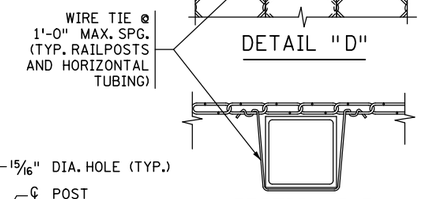

SECTION B-B

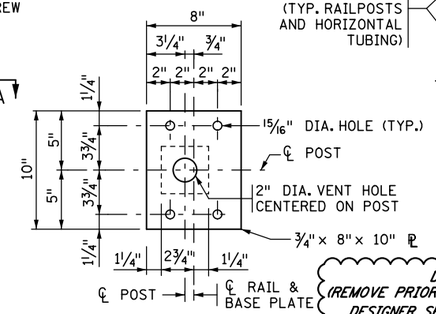

BASE PLATE

DESIGNER NOTE
(REMOVE PRIOR TO PLOTTING FINAL PLAN):
DESIGNER SHALL CONSULT WITH BRIDGE OFFICE ARCHITECTURAL SPECIALIST.
CHANGE NOTE ACCORDINGLY.

GENERAL NOTES

CONTINUOUSLY GROUND ALL METAL RAILINGS; SEE THE SPECIAL PROVISIONS. REFER TO THE ELECTRICAL PLANS AND ELECTRICAL SPECIAL PROVISIONS FOR DETAILS REGARDING BONDING MULTIPLE ELECTRICAL GROUNDING SYSTEMS.

PAYMENT LENGTH SHALL BE MEASURED AS THE OUT TO OUT LENGTH ALONG THE CENTERLINE OF THE RAILING BETWEEN THE OUTSIDE ENDS, WITH DEDUCTIONS FOR THE LENGTH OF CONCRETE POSTS, IF PRESENT.

PROVIDE A500, GRADE B STRUCTURAL STEEL TUBING (HSS) IN THE RAIL CONFORMING TO SPEC. 3361. ALL OTHER STEEL SHALL CONFORM TO SPEC. 3306.

GALVANIZE BOLTS, NUTS, WASHERS AND ANCHORS PER SPEC. 3392. GALVANIZE ALL OTHER STRUCTURAL STEEL PER SPEC. 3394, AFTER FABRICATION.

COAT THE GALVANIZED RAILING, BASE PLATES, AND PROTRUDING PORTIONS OF BOLTS, NUTS, ANCHORS, AND WASHERS.

INSTALL RAIL POSTS AND SPINDLES [NORMAL TO GRADE OR PLUMB.]

CURVE HORIZONTAL RAILS WHERE APPLICABLE AND PLACE RAILS PARALLEL TO THE EDGE OF SIDEWALK PROFILE.

ALWAYS USE CHAIN LINK FENCE WITH THIS RAILING. REFER TO SPEC. 2557 FOR CHAIN LINK FABRIC AND TIE REQUIREMENTS.

SEE SPECIAL PROVISIONS FOR REQUIREMENTS NOT INCLUDED ON THIS SHEET.

DRILL 1/2" DIA. MAX. VENT HOLES ON THE UNDERSIDE OF RAIL TUBES AS NECESSARY TO FACILITATE GALVANIZING.

1. DRILL VENT HOLE IN THE RAIL POST WITHIN 2" OF THE UNDERSIDE OF THE CAP, ON THE NON-TRAFFIC SIDE OF THE POST AS NECESSARY TO FACILITATE GALVANIZING. MAXIMUM HOLE SIZE IS 1/2" DIA.

2. SEE SUPERSTRUCTURE SHEETS AND STANDARD FIGURE 5-397.167 FOR CONTROL JOINT SPACING AND DETAILS.

3. ADHESIVE ANCHORAGE WITH 5/8" DIA. ANCHOR ROD PER SPEC. 3385, TYPE A WITH HEX NUT AND WASHER. PROVIDE AN ADHESIVE WITH A MINIMUM CHARACTERISTIC BOND STRENGTH IN UNCRACKED CONCRETE OF 1.5 KSI. EMBED THE ANCHORAGE NO LESS THAN 8" REGARDLESS OF CHARACTERISTIC BOND STRENGTH. DRILL THROUGH REINFORCEMENT (IF ENCOUNTERED) TO ACHIEVE MINIMUM EMBEDMENT. ENSURE HEX NUT IS IN CONTACT WITH THE ADJACENT SURFACE AND TORQUE TO 60 FT-LBS UNLESS A HIGHER TORQUE IS RECOMMENDED BY THE MANUFACTURER. PROOF LOAD TO 8.8 KIPS. SEE SPECIAL PROVISIONS FOR ADDITIONAL REQUIREMENTS.

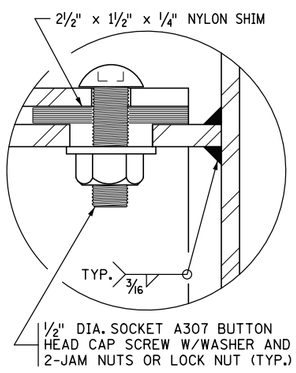

DETAIL "B"

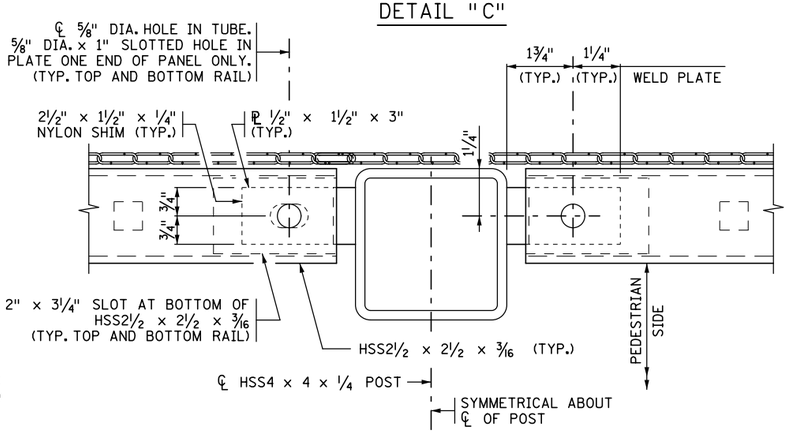

SECTION A-A

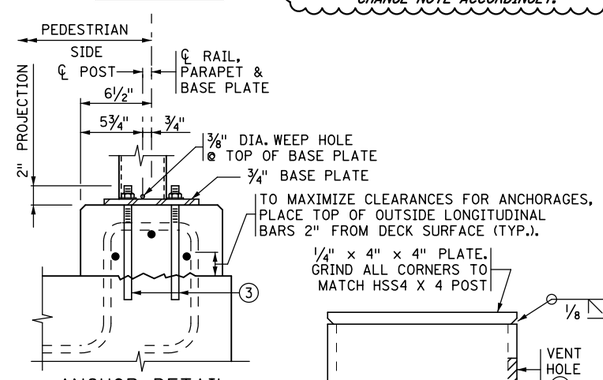

ANCHOR DETAIL

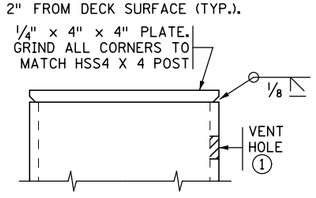

RAILPOST CAP DETAIL

REVISION: 05-25-2016

APPROVED: NOVEMBER 6, 2013

Nancy Daubenberger
STATE BRIDGE ENGINEER

CERTIFIED BY _____ LICENSED PROFESSIONAL ENGINEER _____ DATE

NAME: LIC. NO.

TITLE: ORNAMENTAL METAL RAILING WITH FENCE (DESIGN T-3 CURB MOUNT)

DES: DR: CHK: CHK:

SHEET NO. OF SHEETS

FIG. 5-397.161

APPROVED:

BRIDGE NO.

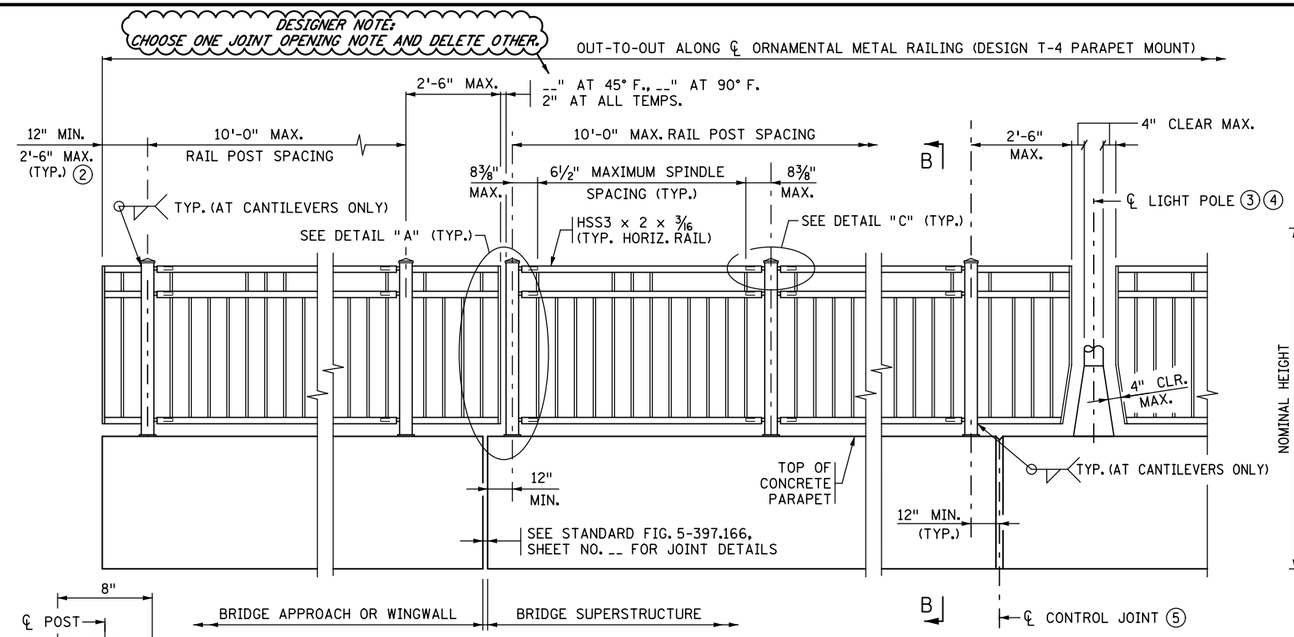

INSIDE ELEVATION OF RAILING

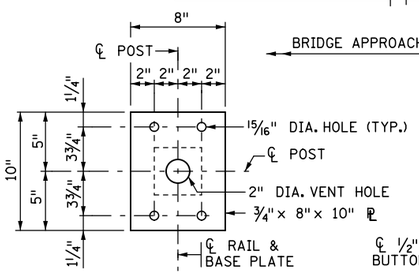

BASE PLATE

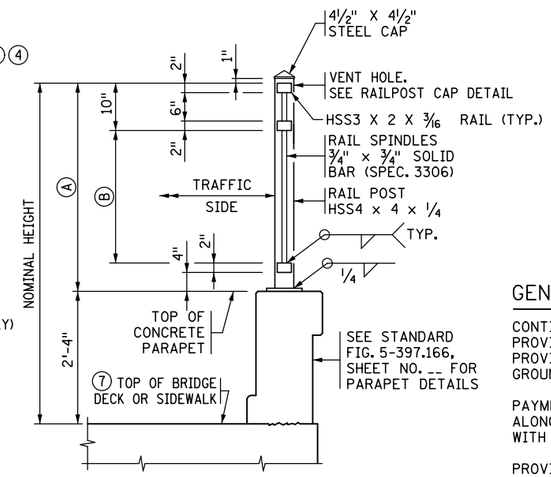

SECTION B-B

(6'-0" TALL OPTION SHOWN)

RAILING HEIGHT TABLE		
NOMINAL HEIGHT	Ⓐ	Ⓑ
4'-6"	2'-2"	10"
6'-0"	3'-8"	2'-4"
8'-0"	5'-8"	4'-4"

DESIGNER NOTE
(REMOVE PRIOR TO PLOTTING FINAL PLAN):
CHOOSE ONE HEIGHT FROM RAILING HEIGHT TABLE ABOVE AND CROSS OUT OTHER HEIGHTS. RAIL HEIGHTS GREATER THAN SHOWN REQUIRE REDESIGN.

DESIGNER NOTE
(REMOVE PRIOR TO PLOTTING FINAL PLAN):
FOR ROADWAY DESIGN SPEEDS GREATER THAN 35 MPH T-4 ORNAMENTAL RAILINGS MUST BE PROTECTED BY A TRAFFIC BARRIER.

DESIGNER NOTE
(REMOVE PRIOR TO PLOTTING FINAL PLAN):
DESIGNER SHALL CONSULT WITH BRIDGE OFFICE ARCHITECTURAL SPECIALIST. CHANGE NOTE ACCORDINGLY.

GENERAL NOTES

CONTINUOUSLY GROUND ALL METAL RAILINGS; SEE THE SPECIAL PROVISIONS. REFER TO THE ELECTRICAL PLANS AND ELECTRICAL SPECIAL PROVISIONS FOR DETAILS REGARDING BONDING MULTIPLE ELECTRICAL GROUNDING SYSTEMS.

PAYMENT LENGTH SHALL BE MEASURED AS THE OUT TO OUT LENGTH ALONG THE CENTERLINE OF THE RAILING BETWEEN THE OUTSIDE ENDS, WITH DEDUCTIONS FOR THE LENGTH OF CONCRETE POSTS, IF PRESENT.

PROVIDE A500, GRADE B STRUCTURAL STEEL TUBING (HSS) IN THE RAIL CONFORMING TO SPEC. 3361. ALL OTHER STEEL SHALL CONFORM TO SPEC. 3306.

GALVANIZE BOLTS, NUTS, WASHERS AND ANCHORS PER SPEC. 3392. GALVANIZE ALL OTHER STRUCTURAL STEEL PER SPEC. 3394, AFTER FABRICATION.

COAT THE GALVANIZED RAILING, BASE PLATES, AND PROTRUDING PORTIONS OF BOLTS, NUTS, ANCHORS, AND WASHERS.

INSTALL RAIL POSTS AND SPINDLES [NORMAL TO GRADE OR PLUMB.]

CURVE HORIZONTAL RAILS WHERE APPLICABLE AND PLACE RAILS PARALLEL TO THE EDGE OF SIDEWALK PROFILE.

SEE SPECIAL PROVISIONS FOR REQUIREMENTS NOT INCLUDED ON THIS SHEET.

DRILL ½" DIA. MAX. VENT HOLES ON THE UNDERSIDE OF RAIL TUBES AS NECESSARY TO FACILITATE GALVANIZING.

① DRILL VENT HOLE IN THE RAIL POST WITHIN 2" OF THE UNDERSIDE OF THE CAP, ON THE NON-TRAFFIC SIDE OF THE POST AS NECESSARY TO FACILITATE GALVANIZING. MAXIMUM HOLE SIZE IS ½" DIA.

② PLACE ℄ OF END POST 12" FROM END OF CONCRETE PARAPET IF GUARDRAIL CONNECTION PLATE IS PRESENT.

③ IF LIGHT POLE IS MOUNTED ON BLISTER, RAILING MAY BE CONTINUOUS IN FRONT OF LIGHT POLE (SEE PARAPET & LIGHT POLE DETAILS).

④ CONTRACTOR TO COORDINATE LIGHT POLE DETAILS WITH THE RAILING FABRICATOR TO ENSURE PROPER CLEARANCES AND RAILING CONFIGURATION ADJACENT TO THE POLE.

⑤ SEE SUPERSTRUCTURE SHEETS AND STANDARD FIGURE 5-397.166 FOR CONTROL JOINT SPACING AND DETAILS.

⑥ PROVIDE A PYRAMID TOP STYLE STEEL CAP WELDED TO TOP OF POST WITH A SURFACE FINISH OF 1000 MICRO-INCH, OR SMOOTHER, PRIOR TO GALVANIZING.

⑦ IF TOP OF RAISED SIDEWALK, SEE SECTION D-D ON STANDARD FIGURE 5-397.166.

⑧ ADHESIVE ANCHORAGE WITH ⅝" DIA. ANCHOR ROD PER SPEC. 3385, TYPE A WITH HEX NUT AND WASHER. PROVIDE AN ADHESIVE WITH A MINIMUM CHARACTERISTIC BOND STRENGTH IN UNCRACKED CONCRETE OF 1.5 KSI. EMBED THE ANCHORAGE NO LESS THAN 5" REGARDLESS OF CHARACTERISTIC BOND STRENGTH. DRILL THROUGH REINFORCEMENT (IF ENCOUNTERED) TO ACHIEVE MINIMUM EMBEDMENT. ENSURE HEX NUT IS IN CONTACT WITH THE ADJACENT SURFACE AND TORQUE TO 60 FT-LBS UNLESS A HIGHER TORQUE IS RECOMMENDED BY THE MANUFACTURER. PROOF LOAD TO 6.9 KIPS. SEE SPECIAL PROVISIONS FOR ADDITIONAL REQUIREMENTS.

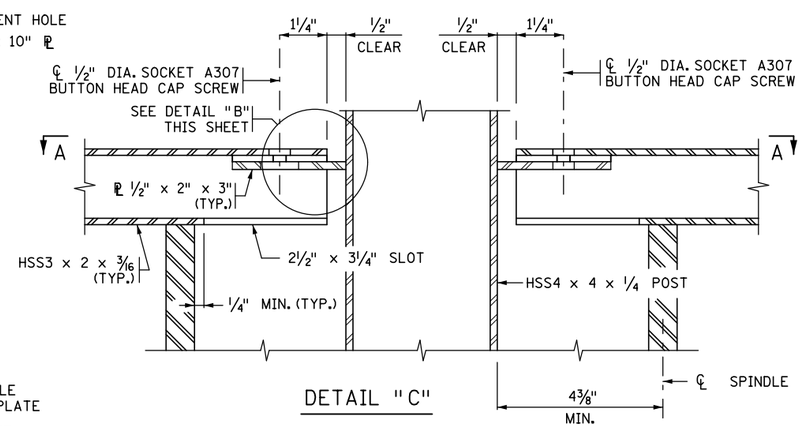

DETAIL "C"

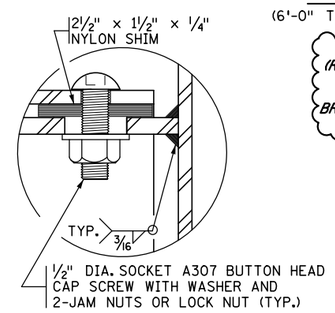

DETAIL "B"

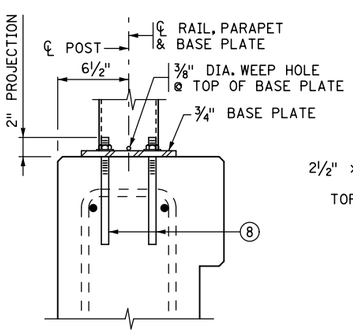

ANCHOR DETAIL

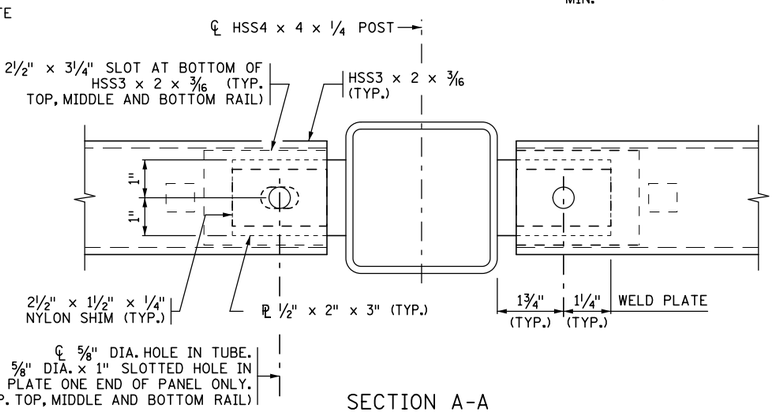

SECTION A-A

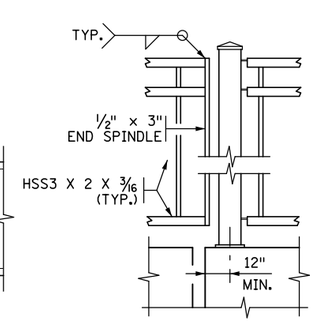

DETAIL "A"

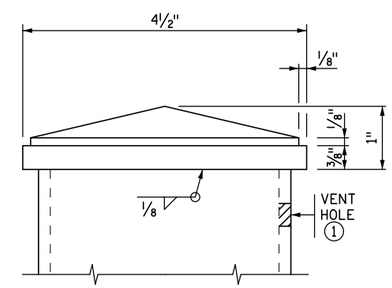

RAILPOST CAP DETAIL ⑥

REVISION: 05-25-2016

APPROVED: NOVEMBER 6, 2013

Nancy Daubenberger
STATE BRIDGE ENGINEER

CERTIFIED BY _____ LICENSED PROFESSIONAL ENGINEER _____ DATE

NAME: LIC. NO.

TITLE: ORNAMENTAL METAL RAILING (DESIGN T-4 PARAPET MOUNT)

DES: DR: CHK: CHK:

SHEET NO. OF SHEETS

APPROVED:

FIG. 5-397.162

BRIDGE NO.

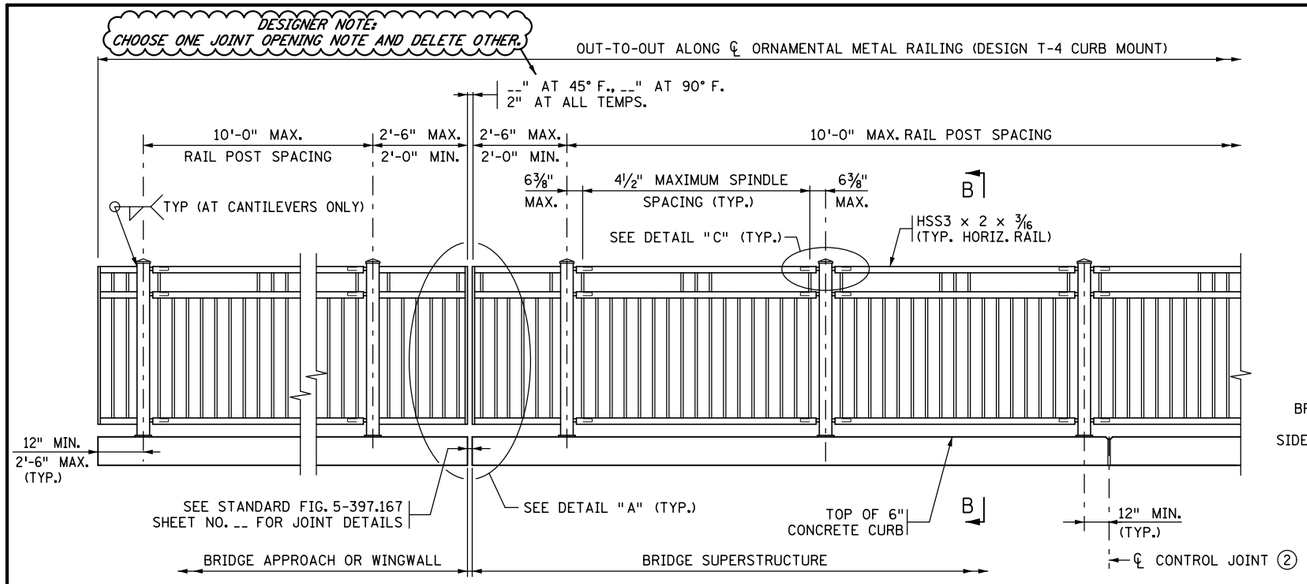

INSIDE ELEVATION OF RAILING

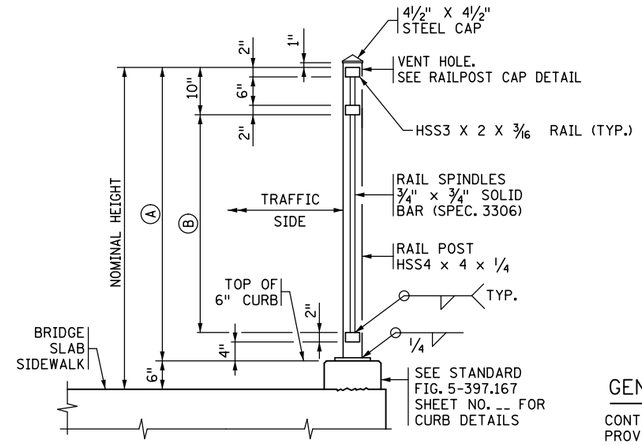

SECTION B-B

(6'-0" TALL OPTION SHOWN)

RAILING HEIGHT TABLE		
NOMINAL HEIGHT	Ⓐ	Ⓑ
4'-6"	4'-0"	2'-8"
6'-0"	5'-6"	4'-2"
8'-0"	7'-6"	6'-2"

DESIGNER NOTE (REMOVE PRIOR TO PLOTTING FINAL PLAN): CHOOSE ONE HEIGHT FROM RAILING HEIGHT TABLE ABOVE AND CROSS OUT OTHER HEIGHTS. RAIL HEIGHTS GREATER THAN SHOWN REQUIRE REDESIGN.

DESIGNER NOTE (REMOVE PRIOR TO PLOTTING FINAL PLAN): T-4 ORNAMENTAL METAL RAILINGS MOUNTED ON A CURB MUST BE PROTECTED BY A TRAFFIC BARRIER.

GENERAL NOTES

CONTINUOUSLY GROUND ALL METAL RAILINGS; SEE THE SPECIAL PROVISIONS. REFER TO THE ELECTRICAL PLANS AND ELECTRICAL SPECIAL PROVISIONS FOR DETAILS REGARDING BONDING MULTIPLE ELECTRICAL GROUNDING SYSTEMS.

PAYMENT LENGTH SHALL BE MEASURED AS THE OUT TO OUT LENGTH ALONG THE CENTERLINE OF THE RAILING BETWEEN THE OUTSIDE ENDS, WITH DEDUCTIONS FOR THE LENGTH OF CONCRETE POSTS, IF PRESENT.

PROVIDE A500, GRADE B STRUCTURAL STEEL TUBING (HSS) IN THE RAIL CONFORMING TO SPEC. 3361. ALL OTHER STEEL SHALL CONFORM TO SPEC. 3306.

GALVANIZE BOLTS, NUTS, WASHERS AND ANCHORS PER SPEC. 3392. GALVANIZE ALL OTHER STRUCTURAL STEEL PER SPEC. 3394, AFTER FABRICATION.

COAT THE GALVANIZED RAILING, BASE PLATES, AND PROTRUDING PORTIONS OF BOLTS, NUTS, ANCHORS, AND WASHERS.

DESIGNER NOTE (REMOVE PRIOR TO PLOTTING FINAL PLAN): DESIGNER SHALL CONSULT WITH BRIDGE OFFICE ARCHITECTURAL SPECIALIST. CHANGE NOTE ACCORDINGLY.

INSTALL RAIL POSTS AND SPINDLES [NORMAL TO GRADE OR PLUMB.]

CURVE HORIZONTAL RAILS WHERE APPLICABLE AND PLACE RAILS PARALLEL TO THE EDGE OF SIDEWALK PROFILE.

SEE SPECIAL PROVISIONS FOR REQUIREMENTS NOT INCLUDED ON THIS SHEET.

DRILL ½" DIA. MAX. VENT HOLES ON THE UNDERSIDE OF RAIL TUBES AS NECESSARY TO FACILITATE GALVANIZING.

① DRILL VENT HOLE IN THE RAIL POST WITHIN 2" OF THE UNDERSIDE OF THE CAP, ON THE NON-TRAFFIC SIDE OF THE POST AS NECESSARY TO FACILITATE GALVANIZING. MAXIMUM HOLE SIZE IS ½" DIA.

② SEE SUPERSTRUCTURE SHEETS AND STANDARD FIGURE 5-397.167 FOR CONTROL JOINT SPACING AND DETAILS.

③ PROVIDE A PYRAMID TOP STYLE STEEL CAP WELDED TO TOP OF POST WITH A SURFACE FINISH OF 1000 MICRO-INCH, OR SMOOTHER, PRIOR TO GALVANIZING.

④ ADHESIVE ANCHORAGE WITH ⅝" DIA. ANCHOR ROD PER SPEC. 3385, TYPE A WITH HEX NUT AND WASHER. PROVIDE AN ADHESIVE WITH A MINIMUM CHARACTERISTIC BOND STRENGTH IN UNCRACKED CONCRETE OF 1.5 KSI. EMBED THE ANCHORAGE NO LESS THAN 8" REGARDLESS OF CHARACTERISTIC BOND STRENGTH. DRILL THROUGH REINFORCEMENT (IF ENCOUNTERED) TO ACHIEVE MINIMUM EMBEDMENT. ENSURE HEX NUT IS IN CONTACT WITH THE ADJACENT SURFACE AND TORQUE TO 60 FT-LBS UNLESS A HIGHER TORQUE IS RECOMMENDED BY THE MANUFACTURER. PROOF LOAD TO 8.8 KIPS. SEE SPECIAL PROVISIONS FOR ADDITIONAL REQUIREMENTS.

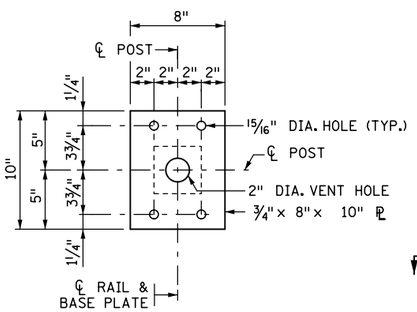

BASE PLATE

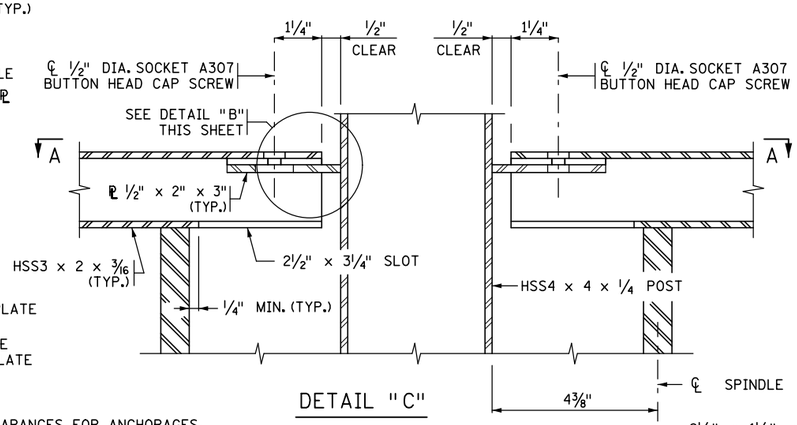

DETAIL "C"

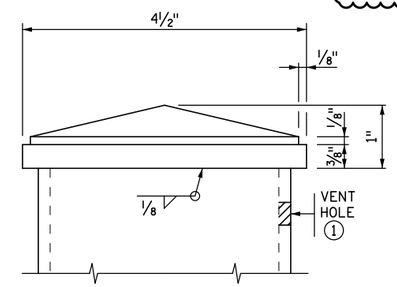

RAILPOST CAP DETAIL ③

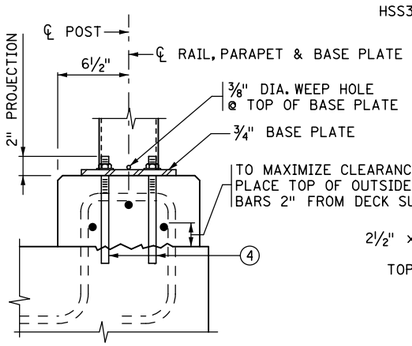

ANCHOR DETAIL

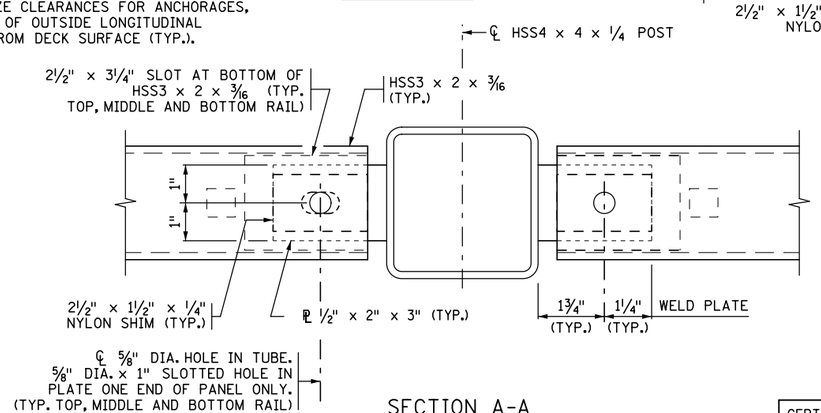

SECTION A-A

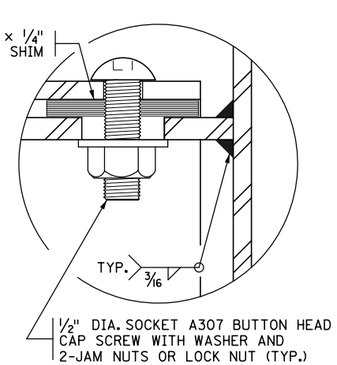

DETAIL "B"

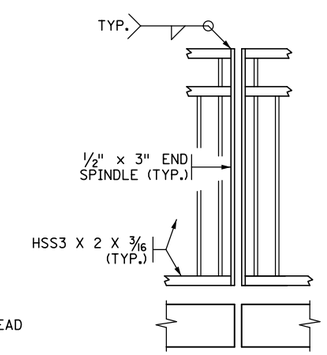

DETAIL "A"

REVISION: 05-25-2016	CERTIFIED BY ____ LICENSED PROFESSIONAL ENGINEER ____ DATE	TITLE: ORNAMENTAL METAL RAILING (DESIGN T-4 CURB MOUNT)	FIG. 5-397.163
APPROVED: NOVEMBER 6, 2013 Nancy Daubenberger STATE BRIDGE ENGINEER	NAME: LIC. NO.	DES: DR: CHK: CHK:	APPROVED: MODIFIED
		SHEET NO. OF SHEETS	BRIDGE NO.

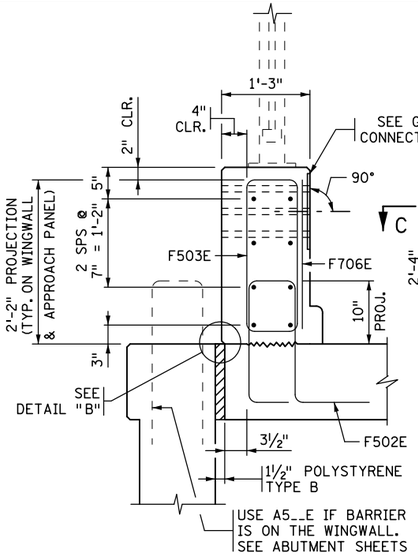

SECTION A-A

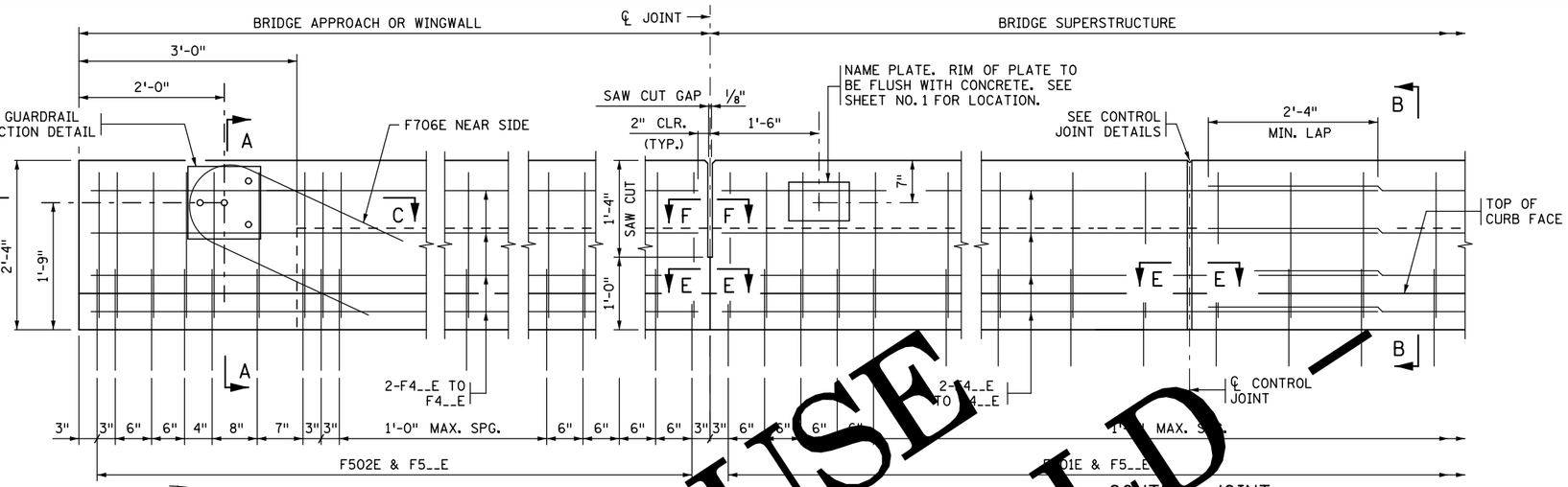

JOINT AT ABUTMENT

CONTROL JOINT

(INTEGRAL OR SEMI-INTEGRAL ABUTMENT) SEE DETAIL "A" FOR PARAPET ABUTMENT

INSIDE ELEVATION OF PARAPET

PARAPET MEETS TEST LEVEL 2 REQUIREMENTS OF NCHRP REPORT 350

DESIGNER NOTE: CHOOSE ONE JOINT OPENING AND DELETE OTHER.

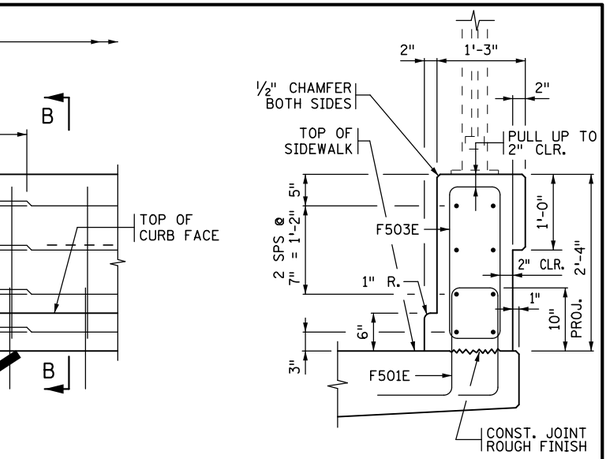

SECTION B-B

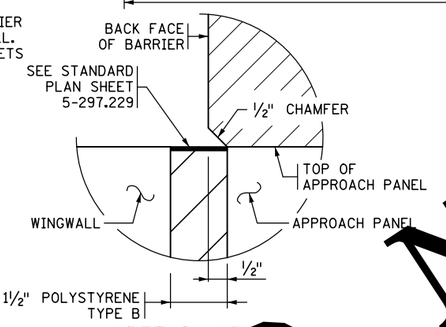

DETAIL "B"

(ELEVATION VIEW)
WHERE COPING ON BACK OF BARRIER AT GUARDRAIL CONNECTION EXTENDS TO BOTTOM OF BARRIER

DESIGNER NOTES
REMOVE PRIOR TO PLOTTING FINAL PLAN.

VERIFY THAT UTILITIES OR CONDUITS PLACED WITHIN THE PARAPET DO NOT INTERFERE WITH ANCHORAGE PLACEMENT.

OMIT GUARDRAIL CONNECTION IF THE PARAPET IS PROTECTED BY A TRAFFIC BARRIER THAT INCLUDES THE GUARDRAIL ATTACHMENT.

X-OUT ALL DETAILS NOT BEING USED.

BILL OF REINFORCEMENT FOR PARAPET

BAR	NO.	LENGTH	SHAPE	LOCATION
F501E		5'-2"		PARAPET VERTICAL
F502E		5'-[illegible]"		PARAPET VERTICAL
F503E		6'-5"		PARAPET VERTICAL
F504E		4'-9"		PARAPET VERTICAL
F505E		3'-1"		PARAPET VERTICAL
F706E		6'-7"		PARAPET VERTICAL
F[illegible]E				PARAPET LONGIT.
F[illegible]E				PARAPET LONGIT.
F[illegible]				PARAPET LONGIT.

* F504E WHEN STRIP SEAL EXPANSION DEVICE IS USED, WITHOUT RAISED SIDEWALK. (SEE DETAIL "A")

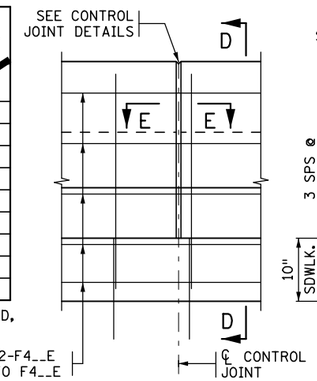

INSIDE ELEVATION OF PARAPET WITH RAISED SIDEWALK

FOR VERTICAL REINFORCEMENT SPACING FOLLOW INSIDE ELEVATION OF PARAPET ABOVE.

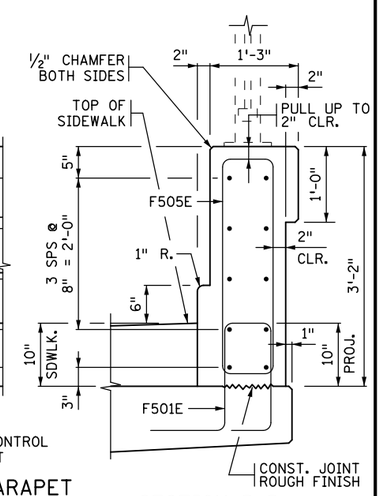

SECTION D-D

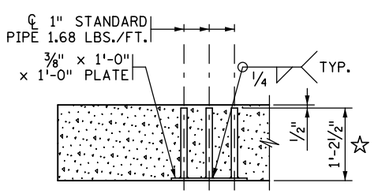

SECTION C-C

(REINFORCEMENT NOT SHOWN)
☆ DIMENSION INCLUDES ⅜" PLATE

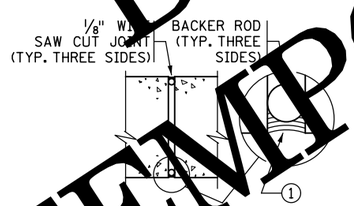

SECTION F-F

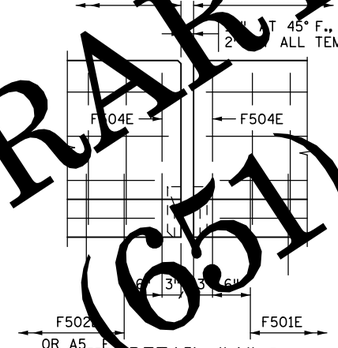

DETAIL "A" ②

(USE ONLY WITH STRIP SEAL EXPANSION DEVICE)
(EXPANSION DEVICE NOT SHOWN)

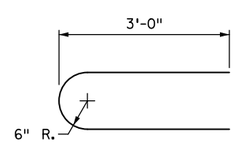

F706E

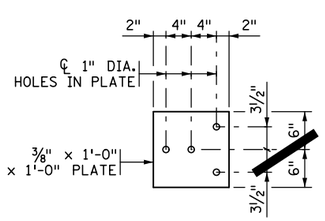

GUARDRAIL CONNECTION DETAIL

GALVANIZE AFTER FABRICATION PER SPEC. 3394. ESTIMATED WEIGHT = 23 LBS.

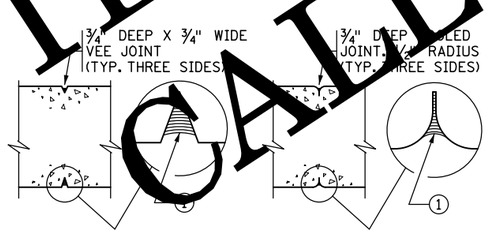

SECTION E-E
CONTRACTOR OPTION 1

SECTION E-E
CONTRACTOR OPTION 2

CONTROL JOINT DETAILS

WHEN USING SLIP FORM METHOD TO PLACE THE CONCRETE, CUT JOINT 3 INCHES DEEP USING MARGIN TROWEL OR SIMILAR MEANS IMMEDIATELY AFTER CONCRETE PLACEMENT (TYP. THREE SIDES)

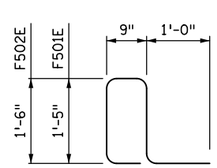

F501E, F502E

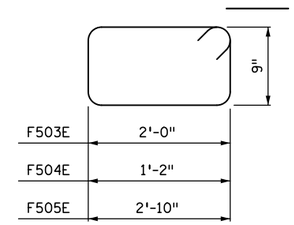

F503E, F504E AND F505E

GENERAL NOTES

CONTINUOUSLY GROUND ALL METAL RAILINGS; SEE THE SPECIAL PROVISIONS. REFER TO THE ELECTRICAL PLANS AND ELECTRICAL SPECIAL PROVISIONS FOR DETAILS REGARDING BONDING MULTIPLE ELECTRICAL GROUNDING SYSTEMS.

PAYMENT LENGTH SHALL BE MEASURED BETWEEN THE OUTSIDE FACES OF THE CONCRETE PARAPET.

CONCRETE PARAPET = 416 LBS./FT. (0.103 CU. YDS./FT.)

CONCRETE PARAPET W/ADJACENT SIDEWALK (BASED ON A 10" SIDEWALK HEIGHT) = 573 LBS./FT. (0.141 CU. YDS./FT.)

FINISH ALL EDGES OF PARAPET WITH ½" CHAMFER, EXCEPT WHERE OTHERWISE NOTED.

MAXIMUM SPACING OF CONTROL JOINTS ON SUPERSTRUCTURE, APPROACH AND WINGWALL SHALL BE 10 FT. SEE SUPERSTRUCTURE SHEET FOR JOINT SPACING.

GUARDRAIL CONNECTION TO BE STRUCTURAL STEEL, SPEC. 3306. GUARDRAIL CONNECTION AND NAME PLATE TO BE CONSIDERED INCIDENTAL TO "TYPE P-1 PARAPET CONCRETE (3Y46 OR 3Y46A)".

SEE STANDARD FIGURE 5-397.___ FOR LIGHT BLISTER DETAILS.

PARAPET QUANTITIES ARE LISTED IN SUMMARY OF QUANTITIES FOR SUPERSTRUCTURE.

① JOINT SEALANT PER MnDOT APPROVED/QUALIFIED PRODUCTS LIST - CRACK AND JOINT MATERIALS - SILICONE JOINT SEALERS.

② REFER TO STANDARD FIGURE 5-397.632 FOR COVER PLATE DETAILS.

DO NOT USE
TEMPORARY HOLD
CALL (651) 366-4484

REVISION:

APPROVED: NOVEMBER 6, 2013
Nancy Daubenberger
STATE BRIDGE ENGINEER

CERTIFIED BY _____ LICENSED PROFESSIONAL ENGINEER _____ DATE
NAME: LIC. NO.

TITLE: CONCRETE PARAPET (TYPE P-1)
WITH INTEGRAL END POST
(WITHOUT CONCRETE WEARING COURSE)

DES: DR:
CHK: CHK:
SHEET NO. OF SHEETS

APPROVED:

FIG. 5-397.166

BRIDGE NO.

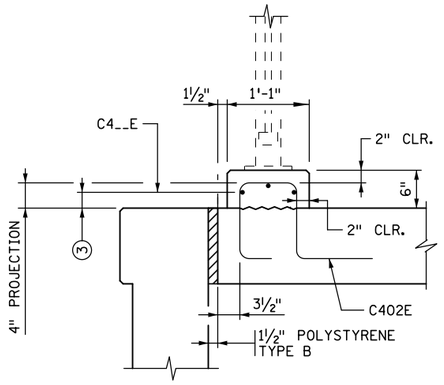

SECTION A-A

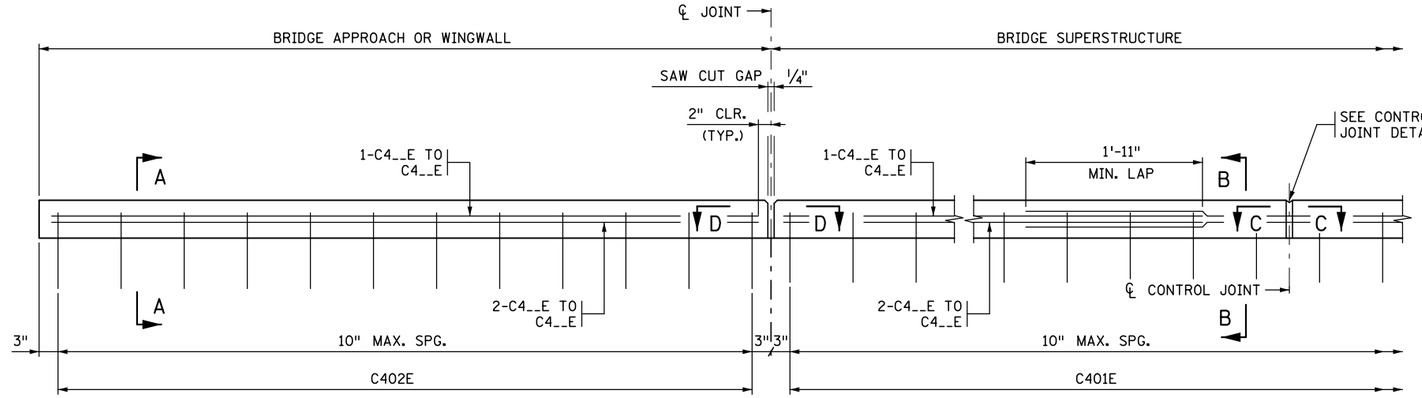

JOINT AT ABUTMENT

INTEGRAL OR SEMI-INTEGRAL ABUTMENT
(SEE ABUTMENT TYPE TABLE BELOW)

INSIDE ELEVATION OF CONCRETE CURB

CONTROL JOINT

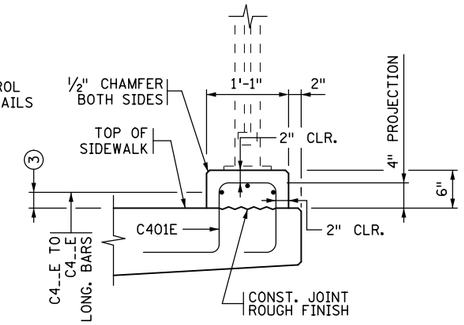

SECTION B-B

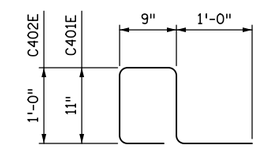

C401E, C402E

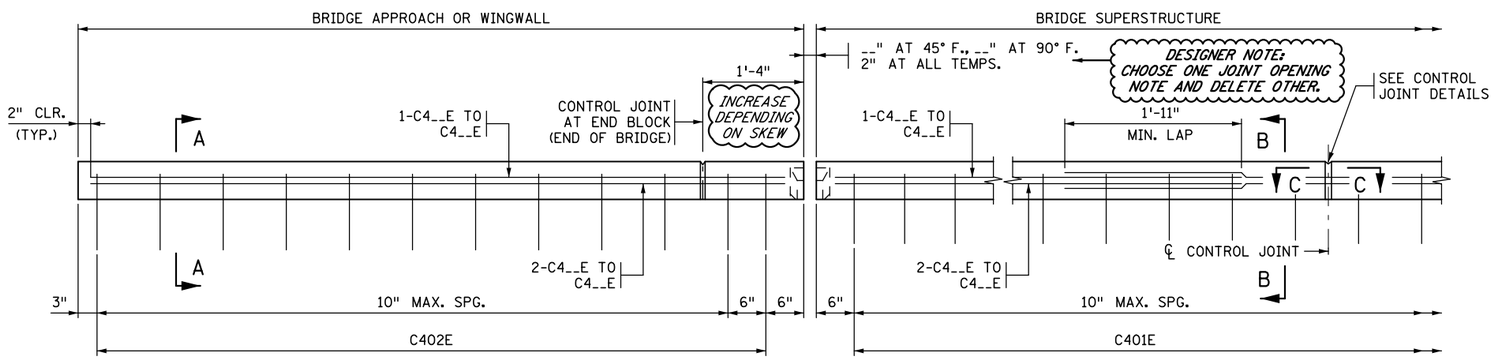

JOINT AT ABUTMENT

PARAPET ABUTMENT (SEE ABUTMENT TYPE TABLE BELOW)
(USE ONLY WITH STRIP SEAL EXPANSION DEVICE)
(EXPANSION DEVICE NOT SHOWN)

INSIDE ELEVATION OF CONCRETE CURB

CONTROL JOINT

CURB DOES NOT MEET CRASH TEST REQUIREMENTS OF NCHRP REPORT 350 OR MASH

BILL OF REINFORCEMENT FOR CURB				
BAR	NO.	LENGTH	SHAPE	LOCATION
C401E		4'-2"		CURB BASE VERTICAL
C402E		4'-4"		CURB BASE VERTICAL
C4__E				CURB BASE LONGIT.
C4__E				CURB BASE LONGIT.
C4__E				CURB BASE LONGIT.

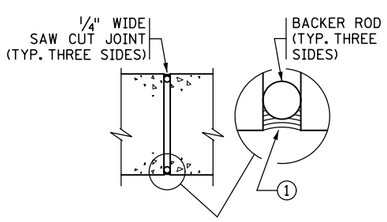

SECTION D-D

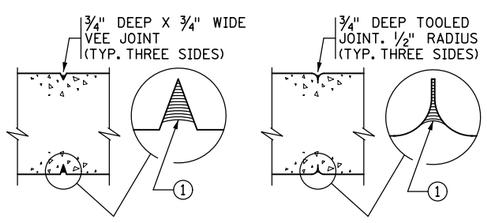

SECTION C-C
CONTRACTOR OPTION 1

SECTION C-C
CONTRACTOR OPTION 2

CONTROL JOINT DETAILS

WHEN USING SLIP FORM METHOD TO PLACE THE CONCRETE, CUT JOINT 3 INCHES DEEP USING MARGIN TROWEL OR SIMILAR MEANS IMMEDIATELY AFTER CONCRETE PLACEMENT (TYP. THREE SIDES)

DESIGNER NOTES
REMOVE PRIOR TO PLOTTING FINAL PLAN.

T-3 AND T-4 ORNAMENTAL METAL RAILINGS MOUNTED ON A CURB MUST BE PROTECTED BY A TRAFFIC BARRIER.

A SPECIAL CURB DESIGN IS REQUIRED IF SUPPORTING LIGHTING OR OTHER FIXTURES/ATTACHMENTS.

IF THE CURB CONTAINS A CONDUIT, USE CAST-IN-PLACE ANCHORAGES FOR THE RAILING ATTACHMENT.

BLOCK OUT AND CROSS HATCH ALL DETAILS NOT BEING USED.

ABUTMENT TYPE	
INTEGRAL OR SEMI-INTEGRAL ABUTMENT	☐
PARAPET ABUTMENT	☐

DESIGNER NOTE: PLACE AN "X" IN THE APPROPRIATE BOX TO INDICATE ABUTMENT TYPE

GENERAL NOTES

CONTINUOUSLY GROUND ALL METAL RAILINGS; SEE THE SPECIAL PROVISIONS. REFER TO THE ELECTRICAL PLANS AND ELECTRICAL SPECIAL PROVISIONS FOR DETAILS REGARDING BONDING MULTIPLE ELECTRICAL GROUNDING SYSTEMS.

MEASURE PAYMENT LENGTH BETWEEN THE OUTSIDE ENDS OF THE CONCRETE CURB.

CONCRETE CURB = 81 LBS./FT. (0.020 CU. YDS./FT.)

FINISH ALL EDGES OF CURB WITH ½" CHAMFER, EXCEPT WHERE OTHERWISE NOTED.

MAXIMUM SPACING OF CONTROL JOINTS ON SUPERSTRUCTURE, APPROACH AND WINGWALL IS 10 FT. SEE SUPERSTRUCTURE SHEET FOR JOINT SPACING.

CONCRETE CURB QUANTITIES ARE LISTED IN SUMMARY OF QUANTITIES FOR SUPERSTRUCTURE.

1. JOINT SEALANT PER MnDOT APPROVED/QUALIFIED PRODUCTS LIST - CRACK AND JOINT MATERIALS - SILICONE JOINT SEALERS.
2. REFER TO STANDARD FIGURE 5-397.632 FOR COVER PLATE DETAILS.
3. TO MAXIMIZE CLEARANCES FOR ANCHORAGES, PLACE TOP OF OUTSIDE LONGITUDINAL BARS 2" FROM DECK SURFACE (TYP.).

REVISION: 08-24-2016
APPROVED: NOVEMBER 6, 2013
Nancy Daubenberger
STATE BRIDGE ENGINEER

CERTIFIED BY _____ LICENSED PROFESSIONAL ENGINEER _____ DATE
NAME: LIC. NO.

TITLE: CONCRETE CURB FOR USE WITH ORNAMENTAL RAILING

DES: DR: CHK: CHK: APPROVED:

SHEET NO. OF SHEETS

FIG. 5-397.167

BRIDGE NO.

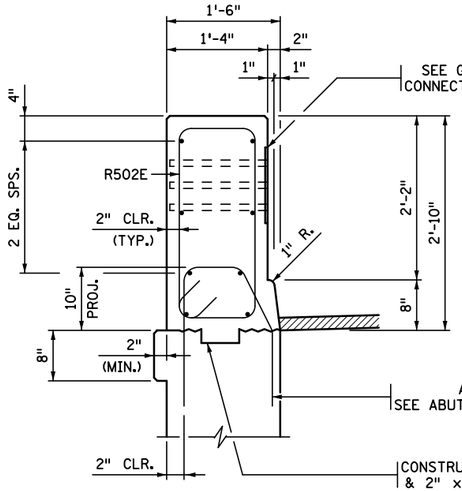

SECTION A-A

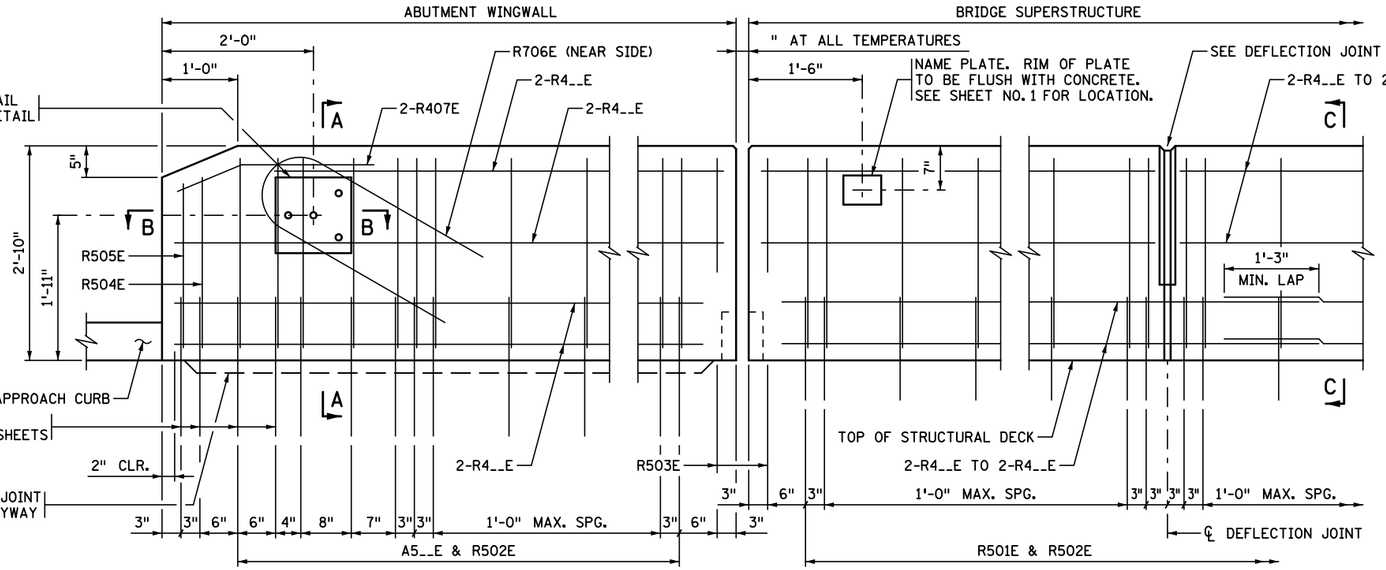

EXPANSION JOINT

EXPANSION DEVICE NOT SHOWN

DEFLECTION JOINT

INSIDE ELEVATION OF BARRIER

CONCRETE WEARING COURSE NOT SHOWN

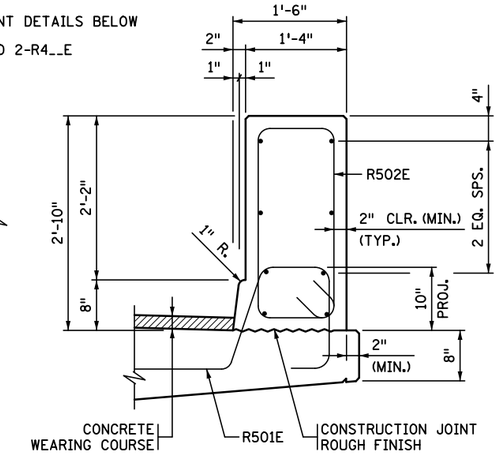

SECTION C-C

BARRIER MEETS TEST LEVEL 4 REQUIREMENTS OF NCHRP REPORT 350

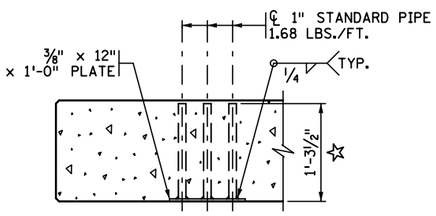

SECTION B-B

(REINFORCEMENT NOT SHOWN)

☆ DIMENSIONS INCLUDE 3/8" PLATE

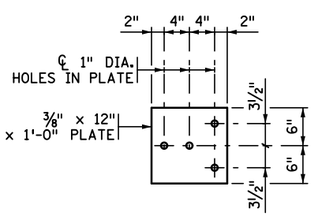

GUARDRAIL CONNECTION DETAIL

GALVANIZE AFTER FABRICATION PER Mn/DOT SPEC. 3394

ESTIMATED WEIGHT = 22 LBS

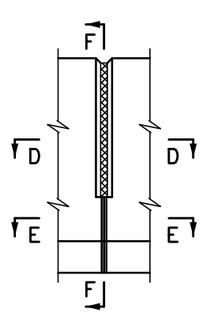

ELEVATION

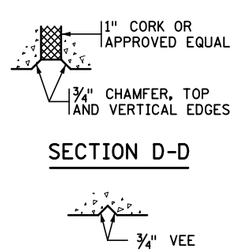

SECTION D-D

SECTION E-E

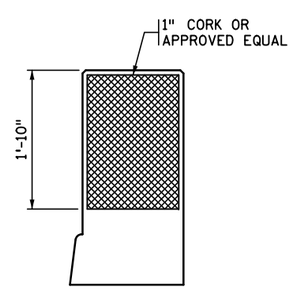

SECTION F-F

DEFLECTION JOINT DETAILS

ESTIMATED QUANTITY OF CORK PER JOINT = 2.15 SQ. FT.

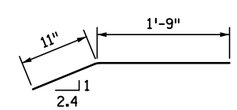

R407E

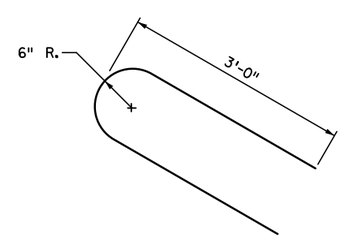

R706E

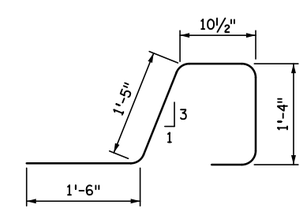

R501E

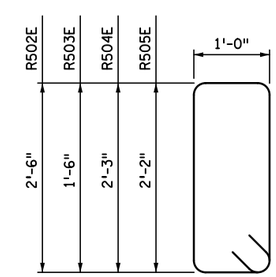

R502E, R503E, R504E & R505E

BILL OF REINFORCEMENT FOR BARRIER

BAR	NO.	LENGTH	SHAPE	LOCATION
R501E		5'-7"	BENT	BARRIER VERTICAL
R502E		7'-11"	BENT	BARRIER VERTICAL
R503E		5'-11"	BENT	BARRIER VERTICAL
R504E		7'-5"	BENT	BARRIER VERTICAL
R505E		7'-3"	BENT	BARRIER VERTICAL
R706E		6'-7"	BENT	BARRIER END
R407E		2'-8"	BENT	BARRIER END LONGIT.
R408E			———	BARRIER LONGITUDINAL
R409E			———	BARRIER LONGITUDINAL
R410E			———	BARRIER LONGITUDINAL
R411E			———	BARRIER LONGITUDINAL

GENERAL NOTES

LENGTH OF "TYPE P-4 (TL-4) RAILING CONCRETE (3Y46 OR 3Y46A)" FOR PAYMENT SHALL BE MEASURED BETWEEN THE OUTSIDE FACES OF THE CONCRETE BARRIER.

CONCRETE BARRIER = 579 LBS./FT. (0.143 CU. YDS./FT.)

FINISH ALL EDGES OF BARRIER WITH 1/2" VEE, EXCEPT WHERE OTHERWISE NOTED.

MAXIMUM SPACING OF CONCRETE DEFLECTION JOINTS SHALL BE 20 FT.

SEE SUPERSTRUCTURE SHEET FOR JOINT SPACING.

GUARDRAIL CONNECTION TO BE STRUCTURAL STEEL, Mn/DOT SPEC. 3306.

GALVANIZE STRUCTURAL STEEL PER Mn/DOT SPEC. 3394 AFTER FABRICATION.

GUARDRAIL CONNECTION, CORK, AND NAME PLATE TO BE CONSIDERED INCIDENTAL TO "TYPE P-4 (TL-4) RAILING CONCRETE (3Y46 OR 3Y46A)".

BARRIER QUANTITIES ARE LISTED IN SUMMARY OF QUANTITIES FOR SUPERSTRUCTURE.

REVISED: 04-17-2013

APPROVED: JULY 25, 2005

STATE BRIDGE ENGINEER

CERTIFIED BY _____ LICENSED PROFESSIONAL ENGINEER _____ DATE

NAME: LIC. NO.

TITLE: CONCRETE BARRIER (TYPE P-4, TL-4) WITH INTEGRAL END POST (WITH CONC. WEARING COURSE)

DES: DR: CHK: CHK:

SHEET NO. OF SHEETS

APPROVED:

FIG. 5-397.173

BRIDGE NO.

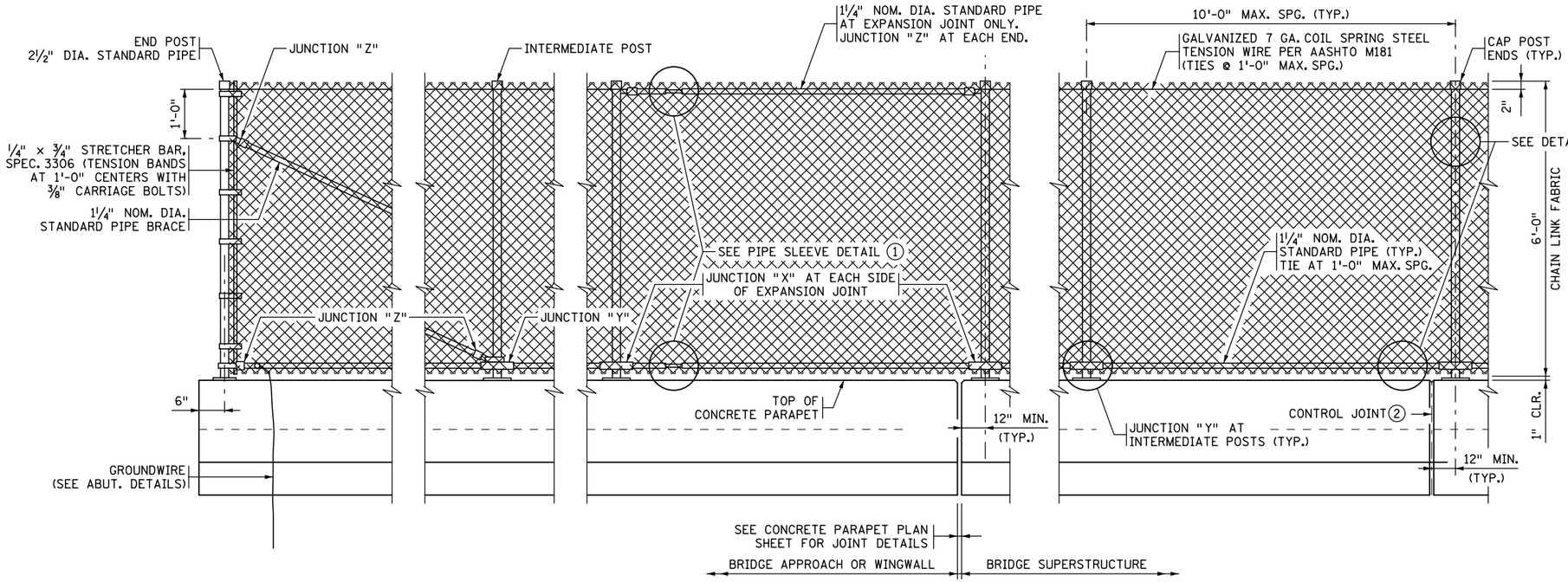

INSIDE ELEVATION OF RAILING

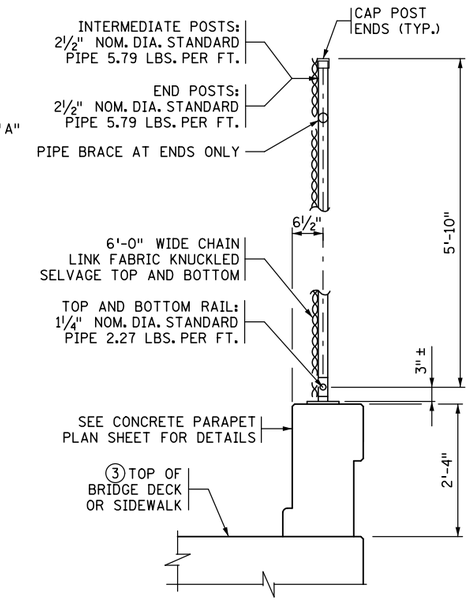

TYPICAL SECTION THROUGH FENCE

INTERMEDIATE POST SHOWN

DESIGNER NOTE
(REMOVE PRIOR TO PLOTTING FINAL PLAN):
SELECT FINISH COATING TYPE (GALV. OR VINYL) IN SPECIAL PROVISION 2557.

GENERAL NOTES

REFER TO SPEC. 2557 AND SPECIAL PROVISIONS FOR ADDITIONAL REQUIREMENTS AND BASIS OF PAYMENT.

MEASURE THE LENGTH OF "WIRE FENCE, DESIGN W-1" FOR PAYMENT BETWEEN THE CENTERS OF END RAILPOSTS.

CONTINUOUSLY GROUND ALL METAL FENCE; SEE SPECIAL PROVISIONS. REFER TO THE ELECTRICAL PLANS AND ELECTRICAL SPECIAL PROVISIONS FOR DETAILS REGARDING BONDING MULTIPLE ELECTRICAL GROUNDING SYSTEMS.

FURNISH AND INSTALL TYPE A FENCE POST ANCHORAGE PER B905 FENCE POST ANCHORAGE PLAN SHEET. INSTALL FENCE POSTS AND ANCHORAGES PLUMB UNLESS OTHERWISE NOTED. INSTALL END POSTS AND BRACING AT 500 FT. MAXIMUM INTERVALS.

INSTALL ALL POSTS WITH A MEANS TO SECURELY HOLD THE TOP TENSION WIRE IN POSITION AND ALLOW FOR THE REMOVAL AND REPLACEMENT OF A POST WITHOUT DAMAGING THE TOP TENSION WIRE.

PROVIDE WIRE TIES WITH 9 GA. (0.148" CORE) ALUMINUM PER ASTM B 211, ALLOY 1100 H18 WITH VINYL COATING (6 GA. AFTER COATING) OR 10 GA. (0.135" CORE) STEEL CL. 3 GALV. WIRE WITH FUSION BONDED VINYL COATING (9 GA. AFTER COATING). USE SAME VINYL THICKNESS COATING REQUIREMENTS AS VINYL COATED FABRIC.

USE 12 GA. GALVANIZED STEEL OR 9 GA. ALUMINUM ALLOY 1350-H19 HOG RINGS FOR TENSION WIRE TIES.

① PROVIDE PIPE SLEEVE IN SPAN BETWEEN THE VERTICAL FENCE POSTS AT EXPANSION JOINT. SEE SUPERSTRUCTURE SHEETS FOR EXP. JOINT LOCATION.

② INSTALL ℄ OF FENCE POST ANCHORAGE AT LEAST 12" FROM CONTROL JOINTS. SEE SUPERSTRUCTURE SHEETS AND CONC. PARAPET PLAN SHEET FOR CONTROL JOINT SPACING AND DETAILS.

③ IF TOP OF RAISED SIDEWALK, SEE SECTION D-D ON CONC. PARAPET PLAN SHEET.

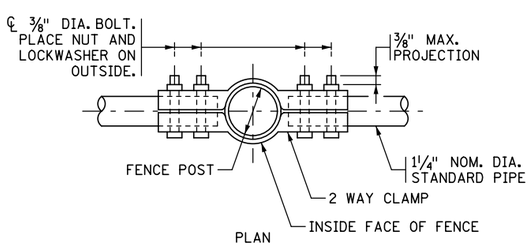

PLAN

2 WAY CLAMP BENDING TABLE	
GRADE OF FENCE	Ø
0° TO 2°	0°
2° TO 6°	4°
6° TO 10°	8°

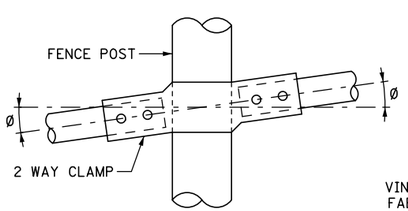

ELEVATION

JUNCTION "X"

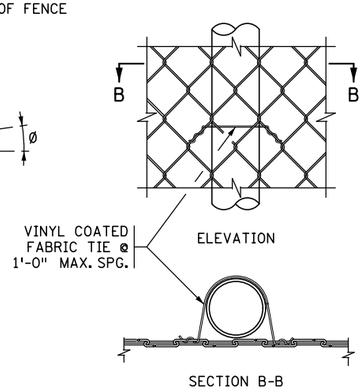

DETAIL "A"

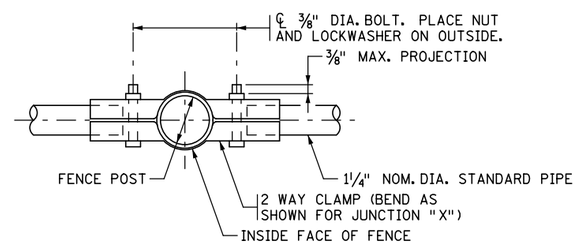

JUNCTION "Y"

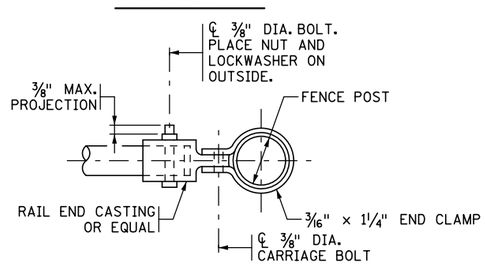

JUNCTION "Z"

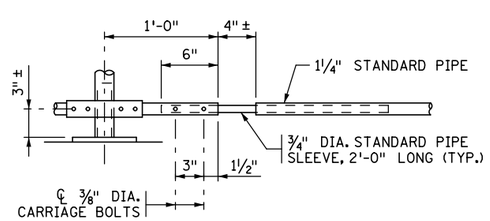

PIPE SLEEVE DETAIL ①

REVISED:			FIG. 5-397.119
APPROVED: JANUARY 05, 2017 — Kevin Western, STATE BRIDGE ENGINEER	CERTIFIED BY ____ LICENSED PROFESSIONAL ENGINEER ____ DATE; NAME: LIC. NO.	TITLE: WIRE FENCE (DESIGN W-1) AND CONCRETE PARAPET (TYPE P-1)	DES: DR: CHK: CHK: APPROVED: SHEET NO. OF SHEETS BRIDGE NO.

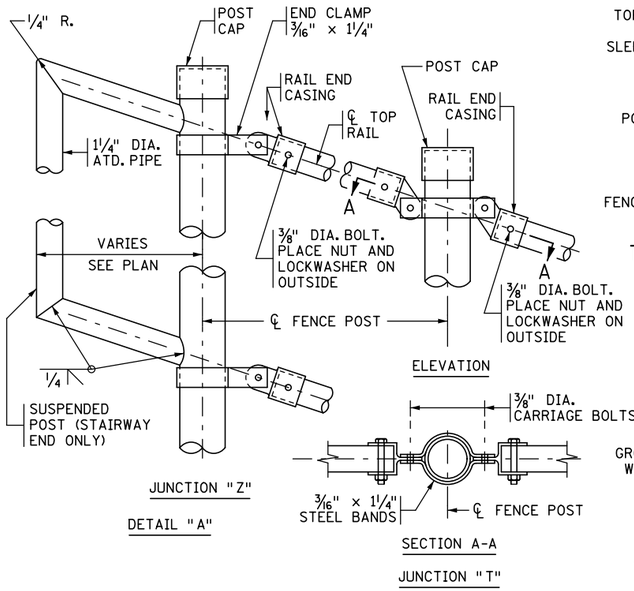

POST CONNECTIONS ON STAIRWAY

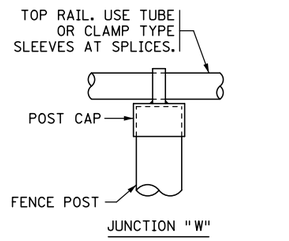

TOP OF INTERMEDIATE POST ON RAMP

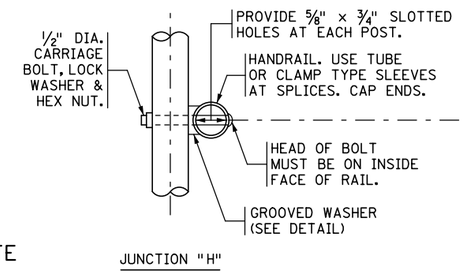

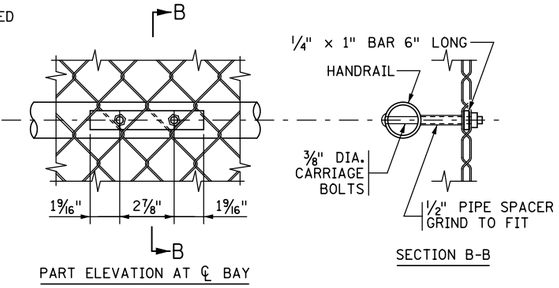

HANDRAIL

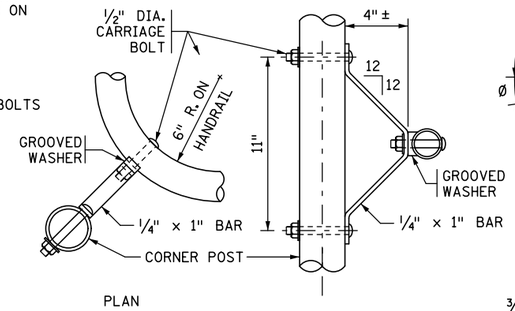

HANDRAIL CORNER DETAIL

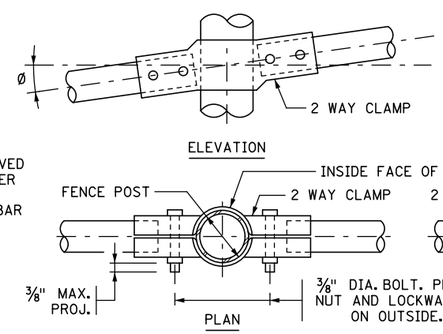

JUNCTION "Y"

2 WAY CLAMP BENDING TABLE	
GRADE OF FENCE	Ø
0° TO 2°	0°
2° TO 6°	4°
6° TO 10°	8°

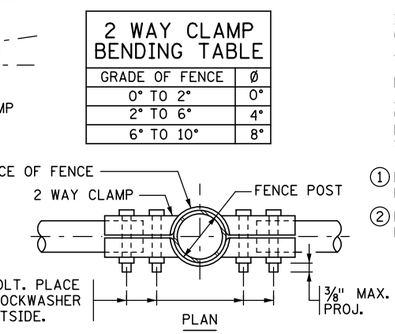

JUNCTION "X"

GENERAL NOTES

REFER TO SPEC. 2557 AND SPECIAL PROVISIONS FOR ADDITIONAL REQUIREMENTS AND BASIS OF PAYMENT.

REFER TO CONCRETE CURB PLAN SHEET FOR CURB DETAILS AND REINFORCEMENT.

MEASURE THE LENGTH OF "WIRE FENCE, DESIGN W-1" FOR PAYMENT BETWEEN THE CENTERS OF END RAILPOSTS (INCLUDING SUSPENDED END POSTS).

CONTINUOUSLY GROUND ALL METAL FENCE; SEE THE SPECIAL PROVISIONS. REFER TO THE ELECTRICAL PLANS AND ELECTRICAL SPECIAL PROVISIONS FOR DETAILS REGARDING BONDING MULTIPLE ELECTRICAL GROUNDING SYSTEMS.

ALL PIPE DIAMETERS ARE NOMINAL.

MAX. SPACING FOR 3" STANDARD PIPE POSTS IS 8 FT.

INSTALL FENCE POSTS AND ANCHORAGES VERTICAL UNLESS OTHERWISE NOTED. FOR POST SPACING, LOCATION, ANCHORAGE TYPE AND OTHER DETAILS SEE PLAN SHEET NO. ___.

PROVIDE WIRE TIES WITH 9 GA. (0.148" CORE) ALUMINUM PER ASTM B 211, ALLOY 1100 H18 WITH VINYL COATING (6 GA. AFTER COATING) OR 10 GA. (0.135" CORE) STEEL CL. 3 GALV. WIRE WITH FUSION BONDED VINYL COATING (9 GA. AFTER COATING). USE SAME VINYL THICKNESS COATING REQUIREMENTS AS VINYL COATED FABRIC.

1. FURNISH AND INSTALL TYPE C FENCE POST ANCHORAGES PER B906 FENCE POST ANCHORAGE PLAN SHEET.
2. FURNISH AND INSTALL TYPE B FENCE POST ANCHORAGES PER B906 FENCE POST ANCHORAGE PLAN SHEET.

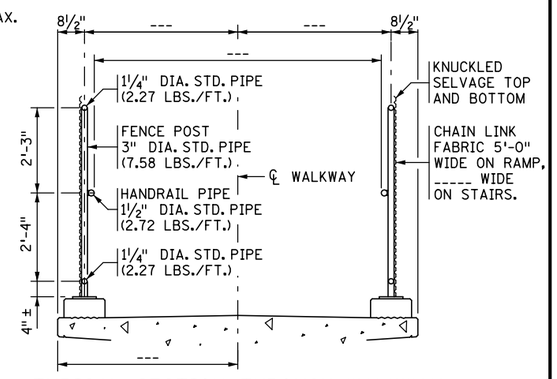

TYPICAL SECTION THROUGH WALKWAY

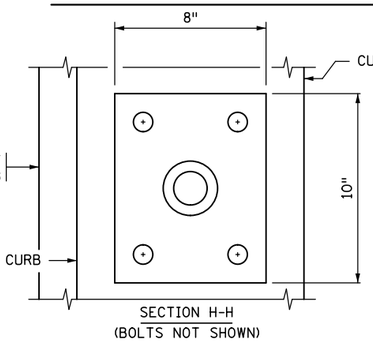

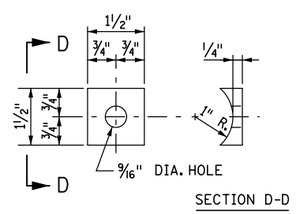

GROOVED WASHER

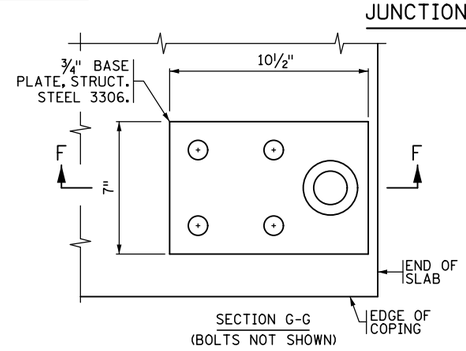

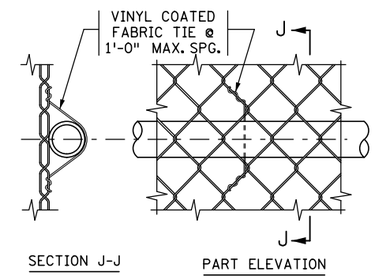

FABRIC TIE

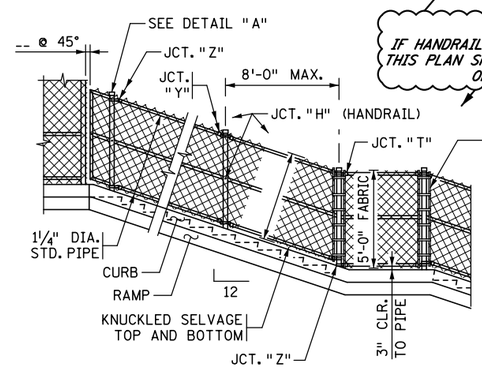

DESIGNER NOTE:
IF HANDRAIL PIPE IS NOT REQUIRED, UPDATE THIS PLAN SHEET TO SHOW CHAIN LINK FENCE ON INSIDE OF WALKWAY

PARTIAL ELEVATION ON STAIRWAY

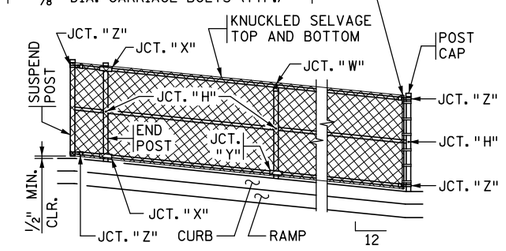

PARTIAL ELEVATION ON RAMP

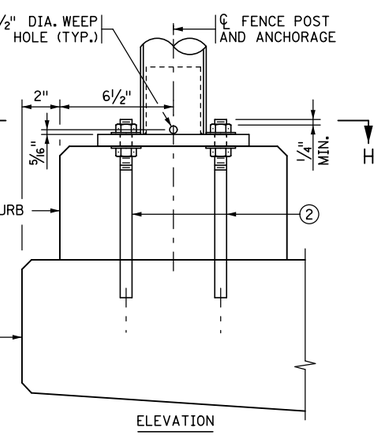

BOLT ANCHORAGE FOR INTERMEDIATE FENCE POSTS 2

FOR SLAB THICKNESS OF 7" (MIN.)

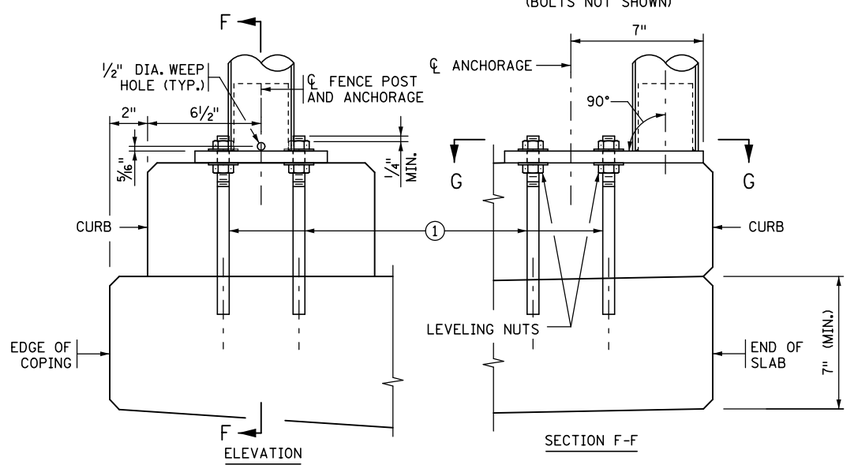

BOLT ANCHORAGE FOR FENCE POSTS AT END OF SLAB 1

FOR SLAB THICKNESS OF 7" (MIN.)

REVISION:	CERTIFIED BY ____ LICENSED PROFESSIONAL ENGINEER ____ DATE	TITLE: 5 FT. WIRE FENCE (DESIGN W-1) FOR PEDESTRIAN BRIDGES	DES:	DR:	FIG. 5-397.202
APPROVED: JANUARY 05, 2017 Kevin Westhoff STATE BRIDGE ENGINEER	NAME: LIC. NO.		CHK:	CHK:	APPROVED:
			SHEET NO. OF SHEETS		BRIDGE NO.

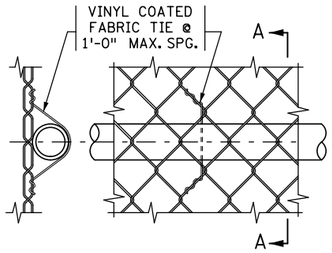

SECTION A-A PARTIAL ELEVATION

FABRIC TIE

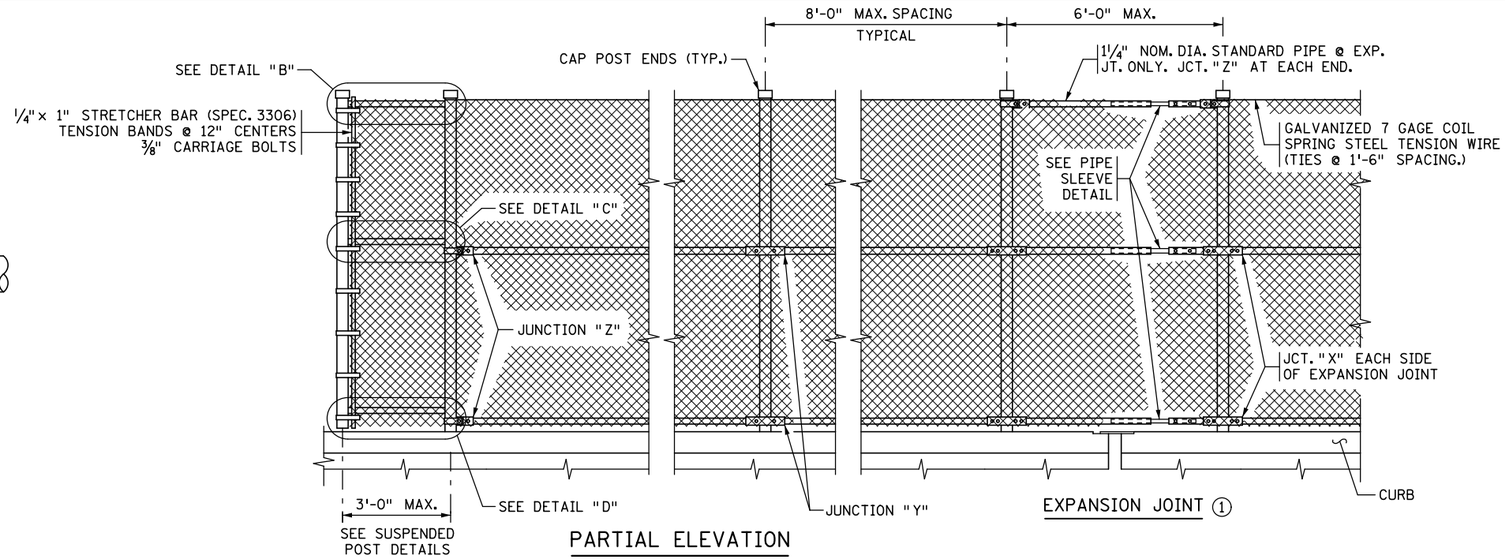

EXPANSION JOINT ①

PARTIAL ELEVATION

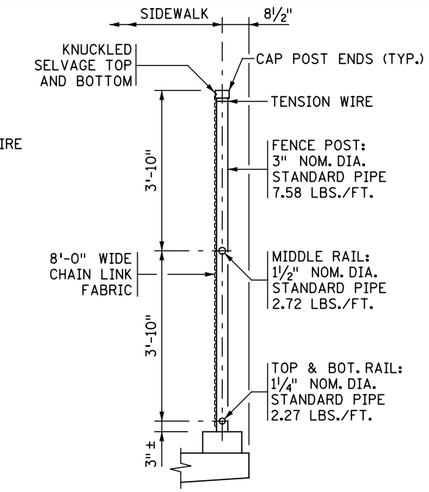

TYPICAL SECTION THRU FENCE

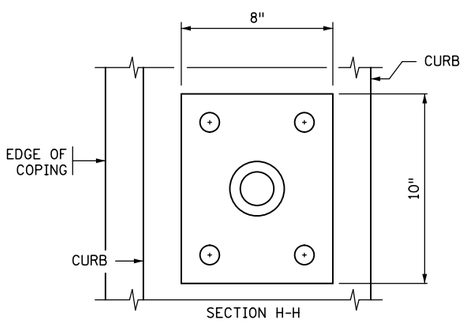

SECTION H-H
(BOLTS NOT SHOWN)

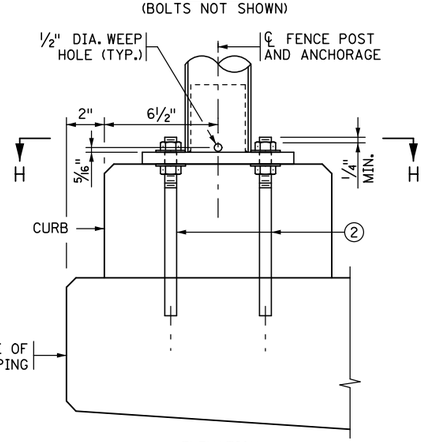

ELEVATION

BOLT ANCHORAGE FOR FENCE POSTS

FOR SLAB THICKNESS OF 7" (MIN.)

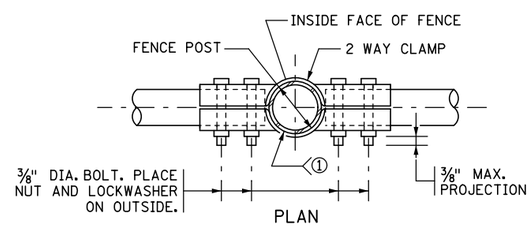

PLAN

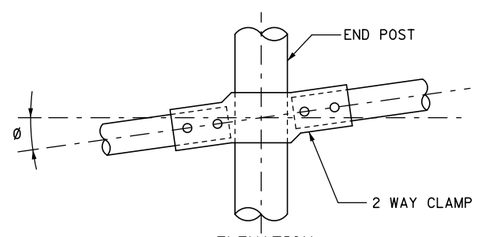

ELEVATION

JUNCTION "X"

2 WAY CLAMP BENDING TABLE	
GRADE OF FENCE	Ø
0° TO 2°	0°
2° TO 6°	4°
6° TO 10°	8°

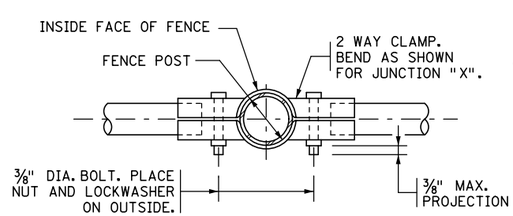

JUNCTION "Y"

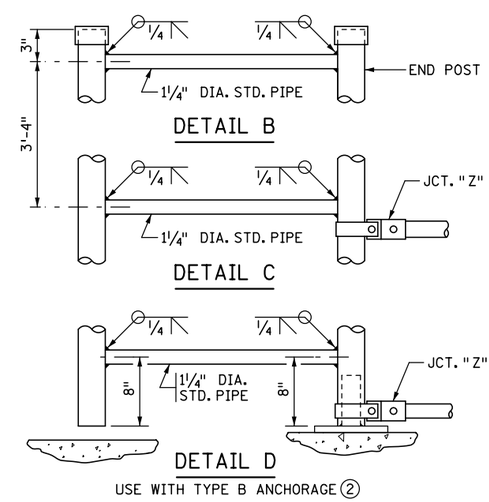

DETAIL B

DETAIL C

DETAIL D

USE WITH TYPE B ANCHORAGE ②

SUSPENDED POST DETAILS

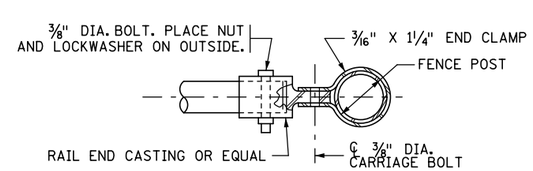

JUNCTION "Z"

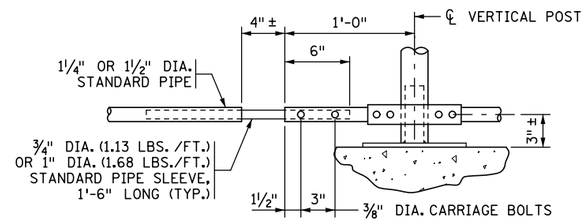

PIPE SLEEVE DETAIL ①

FOR 4" MAXIMUM BRIDGE EXPANSION

GENERAL NOTES

REFER TO SPEC. 2557 AND SPECIAL PROVISIONS FOR ADDITIONAL REQUIREMENTS AND BASIS OF PAYMENT.

REFER TO CONCRETE CURB PLAN SHEET FOR CURB DETAILS AND REINFORCEMENT.

MEASURE THE LENGTH OF WIRE FENCE FOR PAYMENT BETWEEN THE CENTERS OF END RAILPOSTS.

CONTINUOUSLY GROUND ALL METAL FENCE; SEE THE SPECIAL PROVISIONS. REFER TO THE ELECTRICAL PLANS AND ELECTRICAL SPECIAL PROVISIONS FOR DETAILS REGARDING BONDING MULTIPLE ELECTRICAL GROUNDING SYSTEMS.

ALL PIPE DIAMETERS ARE NOMINAL.

MAX. SPACING FOR 3" STANDARD PIPE POSTS IS 8 FT.

INSTALL FENCE POSTS AND ANCHORAGES VERTICAL UNLESS OTHERWISE NOTED. FOR POST SPACING, LOCATION, ANCHORAGE TYPE AND OTHER DETAILS SEE PLAN SHEET NO. ____.

INSTALL ALL POSTS WITH A MEANS TO SECURELY HOLD THE TOP TENSION WIRE IN POSITION AND ALLOW FOR THE REMOVAL AND REPLACEMENT OF A POST WITHOUT DAMAGING THE TOP TENSION WIRE.

PROVIDE WIRE TIES WITH 9 GA. (0.148" CORE) ALUMINUM PER ASTM B 211, ALLOY 1100 H18 WITH VINYL COATING (6 GA. AFTER COATING) OR 10 GA. (0.135" CORE) STEEL CL. 3 GALV. WIRE WITH FUSION BONDED VINYL COATING (9 GA. AFTER COATING). USE SAME VINYL THICKNESS COATING REQUIREMENTS AS VINYL COATED FABRIC.

USE 12 GA. GALVANIZED STEEL OR 9 GA. ALUMINUM ALLOY 1350-H19 HOG RINGS FOR TENSION WIRE TIES.

① PROVIDE PIPE SLEEVE IN SPAN BETWEEN THE VERTICAL FENCE POSTS AT EXPANSION JOINT. SEE SUPERSTRUCTURE SHEETS FOR EXP. JOINT LOCATION.

② FURNISH AND INSTALL TYPE B FENCE POST ANCHORAGES PER B906 FENCE POST ANCHORAGE PLAN SHEET.

REVISION:

APPROVED: JANUARY 05, 2017
Kevin Western
STATE BRIDGE ENGINEER

CERTIFIED BY _____ LICENSED PROFESSIONAL ENGINEER _____ DATE
NAME: LIC. NO.

TITLE: 8 FT. WIRE FENCE FOR PEDESTRIAN WALKS

DES: DR: CHK: CHK:

SHEET NO. OF SHEETS

FIG. 5-397.205

APPROVED:

BRIDGE NO.

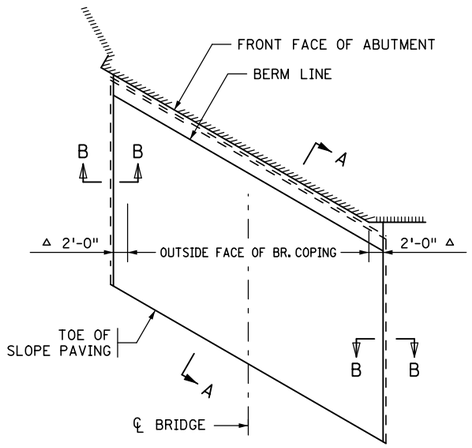

LAYOUT FOR SLOPES 1:2 OR FLATTER

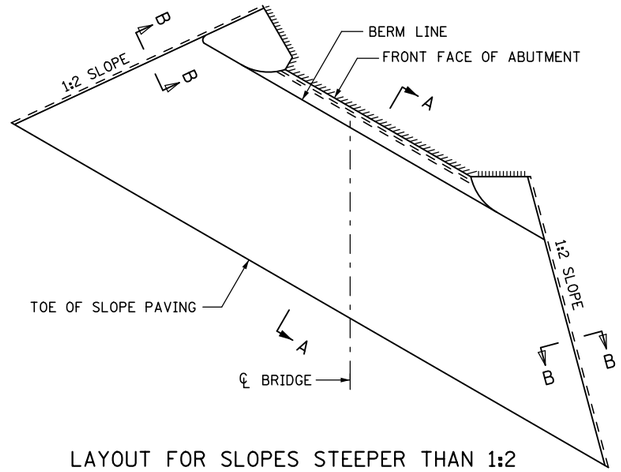

LAYOUT FOR SLOPES STEEPER THAN 1:2

△ 2'-0" FOR TANGENT BRIDGE SUPERSTRUCTURES. VARIES 2'-0" MINIMUM FOR CURVED BRIDGE SUPERSTRUCTURES.

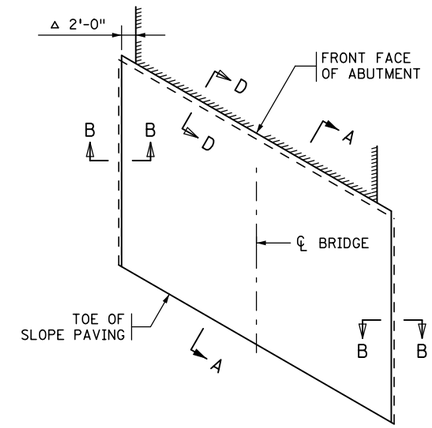

LAYOUT FOR SLOPES AT HIGH ABUTMENTS

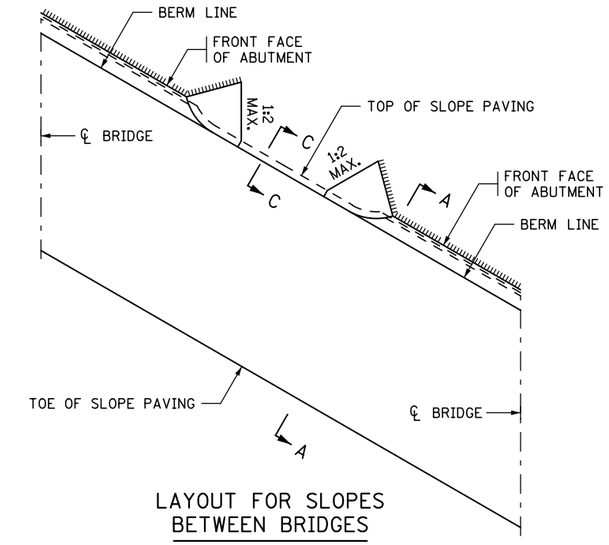

LAYOUT FOR SLOPES BETWEEN BRIDGES

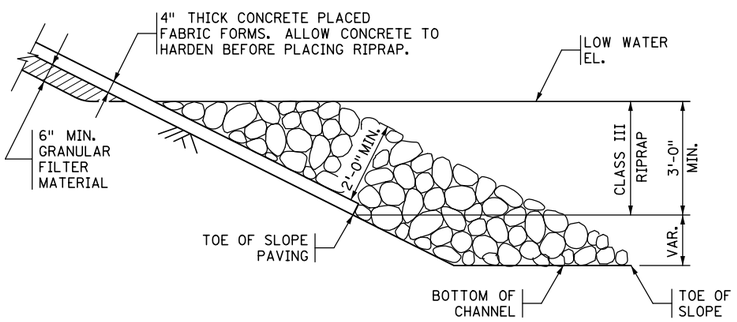

DETAIL "F"

(TOE OF SLOPE PAVING FOR WET CONDITIONS)

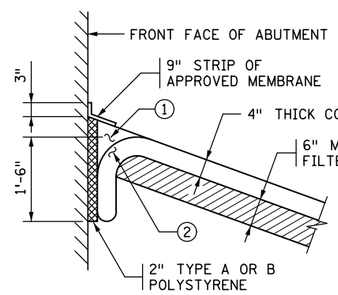

SECTION D-D

(HIGH ABUTMENT)

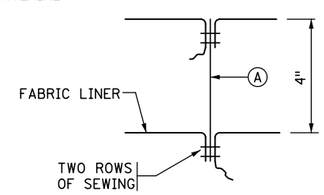

GROUT STOP DETAIL

(A) GROUT STOP TO BE PLACED BETWEEN EVERY THIRD SEAM, 17 FT. ± SPG

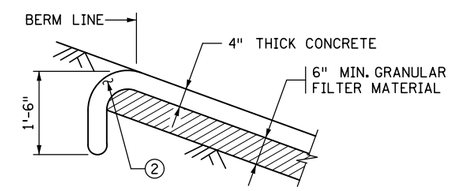

SECTION C-C

GENERAL NOTES

LIMITS OF FABRIC-FORMED SLOPE PAVING SHOWN ARE APPROXIMATE. EXACT LIMITS TO BE DETERMINED BY THE ENGINEER IN THE FIELD.

SEE SPECIAL PROVISIONS FOR MATERIALS, PREPARATION, PLACEMENT, AND PAYMENT.

GRANULAR FILTER MATERIAL PER SPEC. 3601.

SEAMS OF THE FABRIC LINER TO BE PLACED UP THE SLOPE IN A VERTICAL DIRECTION.

SLOPES ARE EXPRESSED AS A RATIO OF VERTICAL DISTANCE : HORIZONTAL DISTANCE.

(1) FILL RECESS WITH CONCRETE PER SPEC. 2514. SLOPE AND COMPACT TO FORM A SMOOTH SURFACE.

(2) PLACE CONCRETE IN CURVED PORTION OF FABRIC PRIOR TO PLACING CONCRETE IN OTHER AREAS.

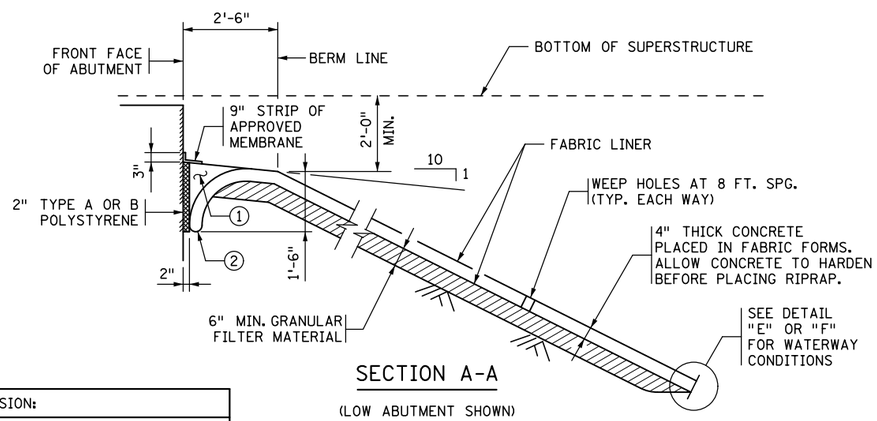

SECTION A-A

(LOW ABUTMENT SHOWN)

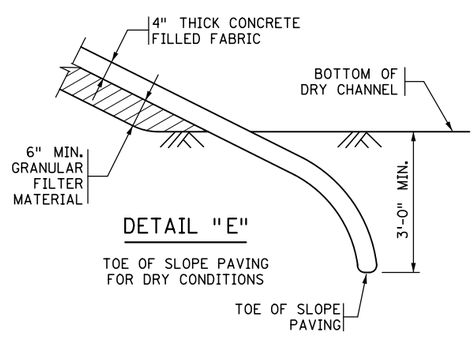

DETAIL "E"

TOE OF SLOPE PAVING FOR DRY CONDITIONS

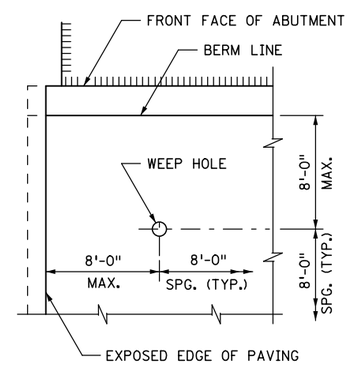

WEEP HOLE DETAIL
PLAN VIEW

(ALL SLOPES AND ABUTMENTS)

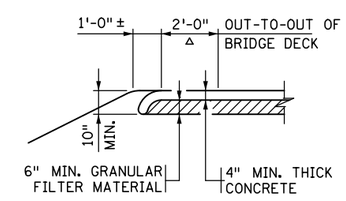

SECTION B-B

REVISION:			FIG. 5-397.300
APPROVED: JANUARY 05, 2017 STATE BRIDGE ENGINEER	CERTIFIED BY ____ LICENSED PROFESSIONAL ENGINEER ____ DATE NAME: LIC. NO.	TITLE: GROUTED INJECTED FABRIC FORMED SLOPE PAVING	DES: DR: CHK: CHK: APPROVED: MODIFIED SHEET NO. OF SHEETS	BRIDGE NO.

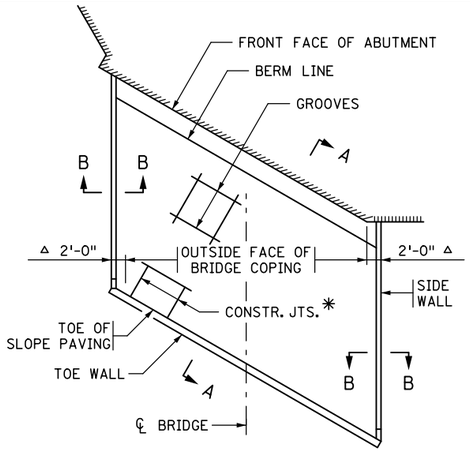

LAYOUT FOR SLOPES 1:2 OR FLATTER

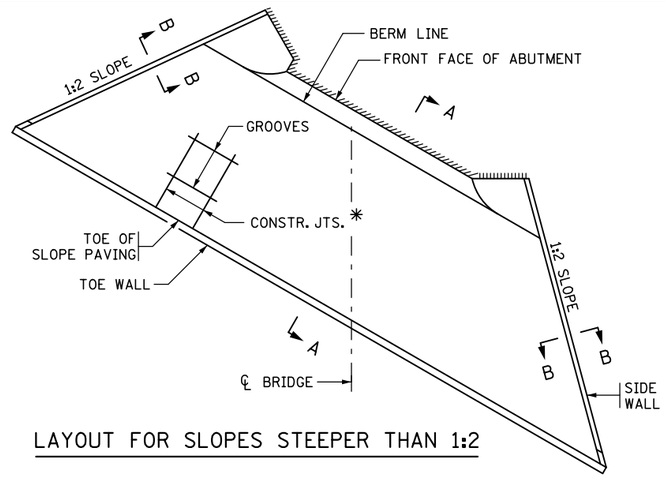

LAYOUT FOR SLOPES STEEPER THAN 1:2

△ 2'-0" FOR TANGENT BRIDGE SUPERSTRUCTURES. VARIES 2'-0" MINIMUM FOR CURVED BRIDGE SUPERSTRUCTURE.

✱ VERTICAL CONSTRUCTION JOINTS MAY BE CONSTRUCTED PARALLEL TO ℄ OF BRIDGE FOR SKEWS TO 10° ONLY.

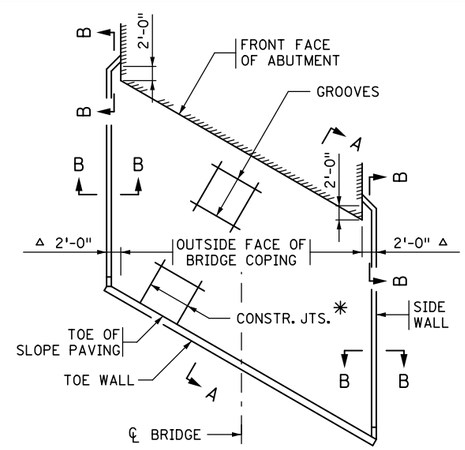

LAYOUT FOR SLOPES AT ABUTMENTS WITH 8' OR GREATER EXPOSURE

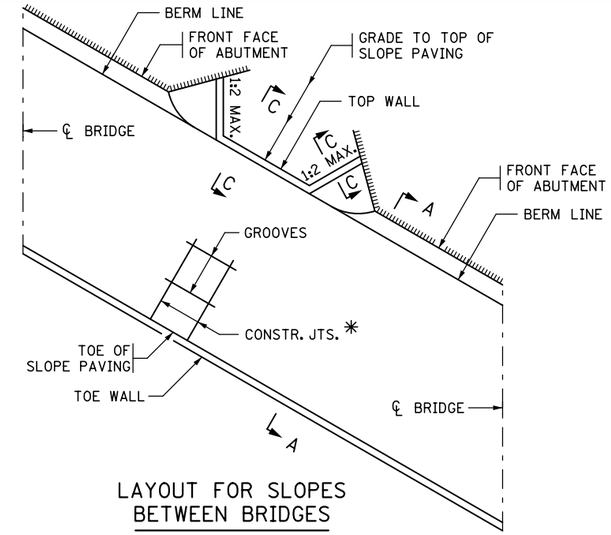

LAYOUT FOR SLOPES BETWEEN BRIDGES

TEXT IN ITALICS ARE DESIGNER NOTES. REMOVE PRIOR TO PLOTTING FINAL PLAN.

FOR INTEGRAL OR SEMI-INTEGRAL ABUTMENTS WITH RUSTICATION, MODIFY THE POLYSTYRENE THICKNESS IN DETAIL "A" TO 2".

FOR SLOPES OF 1:6 OR FLATTER THE TOE WALL AND SIDE WALLS SHOULD BE FLUSH WITH THE TOP OF THE SLOPE PAVING IMMEDIATELY ADJACENT TO ROADWAY SHOULDER TO PREVENT DAMAGE FROM SNOW PLOWS. VERIFY WITH MAINTENANCE PERSONNEL.

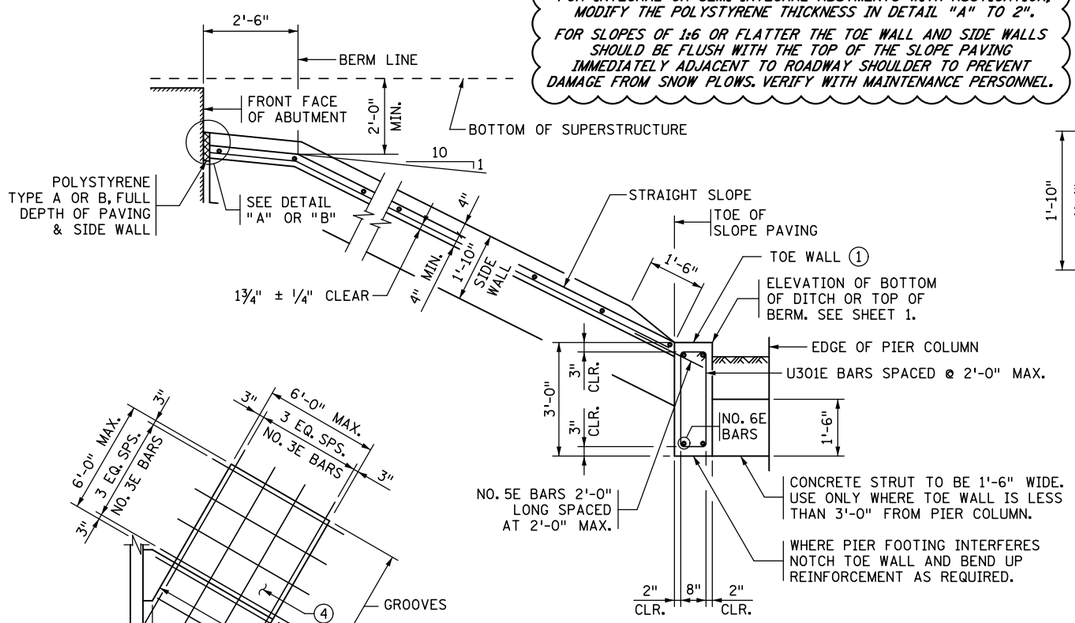

SECTION A-A

1:2 SLOPE SHOWN

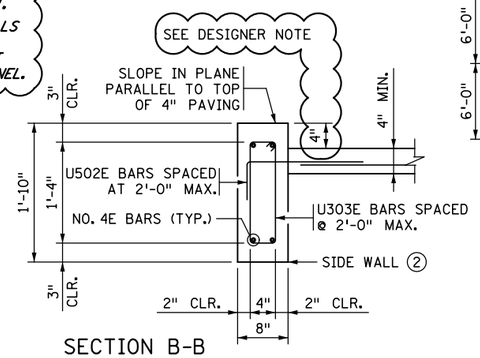

SECTION B-B

NORMAL TO SLOPE

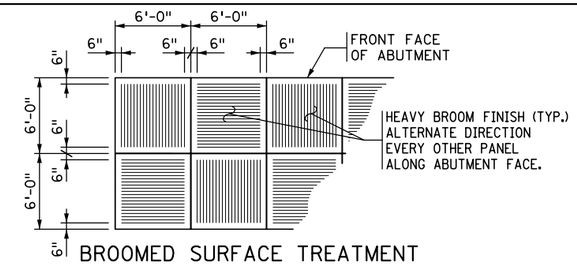

BROOMED SURFACE TREATMENT

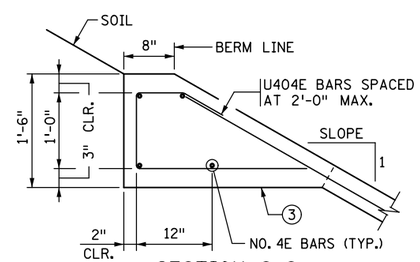

SECTION C-C

CONCRETE & REINFORCEMENT UNIT QUANTITIES

① 0.111 CU. YD. OF CONCRETE/LIN. FT.
8.55 LBS. OF REINFORCEMENT/LIN FT.

② 0.046 CU. YD. OF CONCRETE/LIN. FT.
4.08 LBS. OF REINFORCEMENT/LIN FT.

③ 0.116 CU. YD. OF CONCRETE/LIN. FT.
5.62 LBS. OF REINFORCEMENT/LIN FT.
BASED ON A SLOPE OF 1:2.

④ 0.111 CU. YD. OF CONCRETE/SQ. YD.
9.02 LBS. OF REINFORCEMENT/SQ. YD.

GENERAL NOTE

SLOPES ARE EXPRESSED AS A RATIO OF VERTICAL DISTANCE: HORIZONTAL DISTANCE.

SLOPE PAVING PER SPEC. 2514.

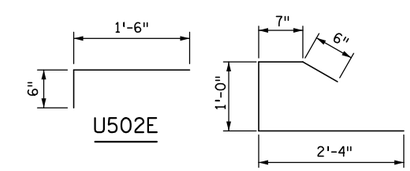

U502E

U404E

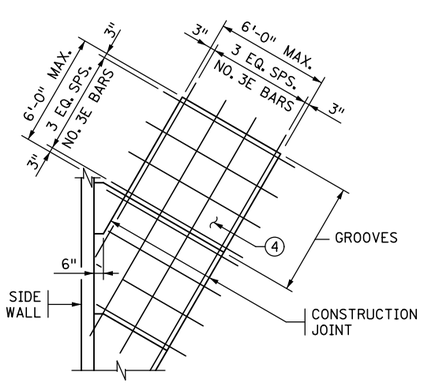

PAVING DETAIL

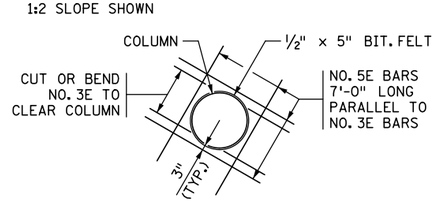

DETAIL WHERE PIER COLUMN EXTENDS THROUGH SLOPE PAVING

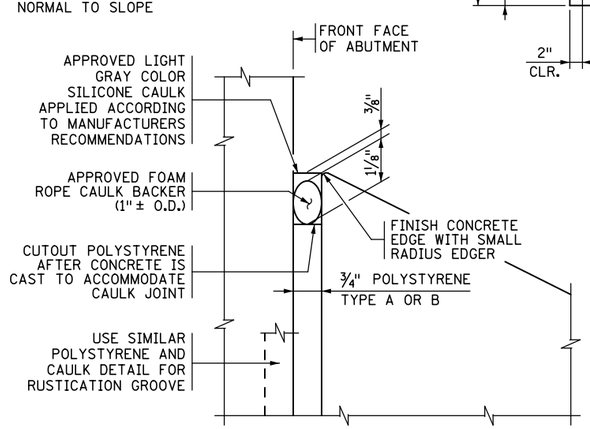

DETAIL "A"

ABUTMENTS WITH RUSTICATION

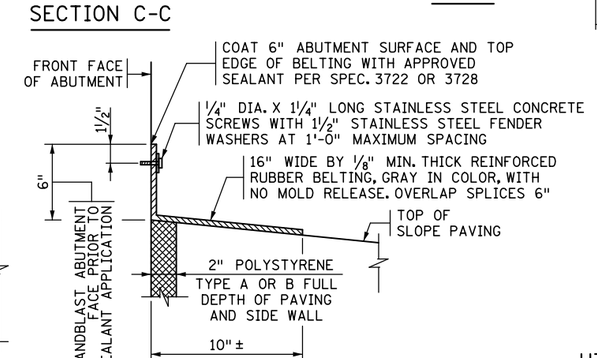

DETAIL "B"

ABUTMENTS WITHOUT RUSTICATION

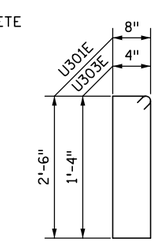

U301E & U303E

REVISION: 05-25-2016

APPROVED: SEPTEMBER 26, 2003

STATE BRIDGE ENGINEER

CERTIFIED BY _____ LICENSED PROFESSIONAL ENGINEER _____ DATE

NAME: LIC. NO.

TITLE: CONCRETE SLOPE PAVING UNDER BRIDGES

DES:	DR:	APPROVED:	FIG. 5-397.301
CHK:	CHK:		BRIDGE NO.
SHEET NO. OF SHEETS			

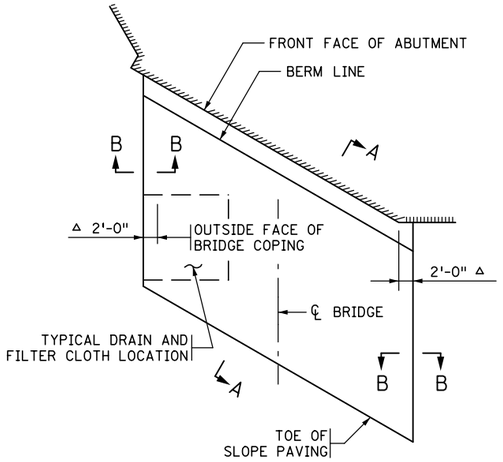

LAYOUT FOR SLOPES 1:2 OR FLATTER

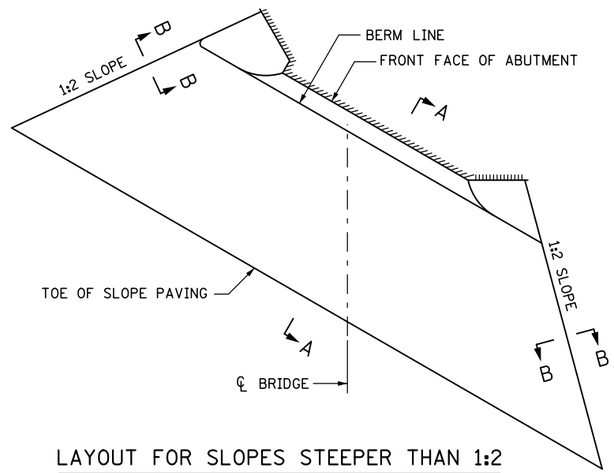

LAYOUT FOR SLOPES STEEPER THAN 1:2

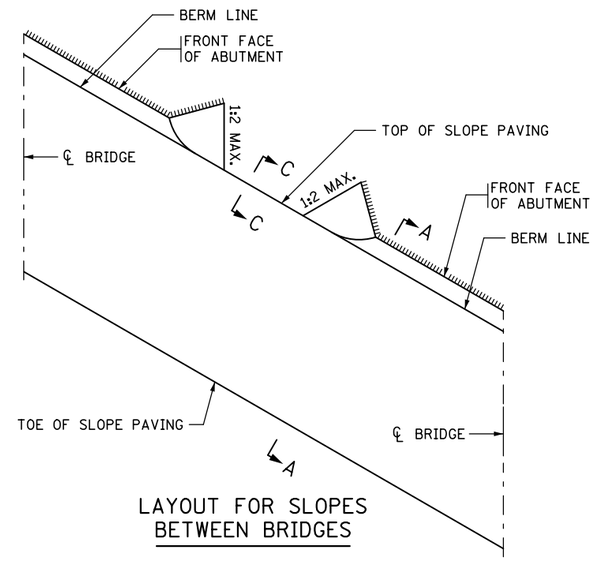

LAYOUT FOR SLOPES BETWEEN BRIDGES

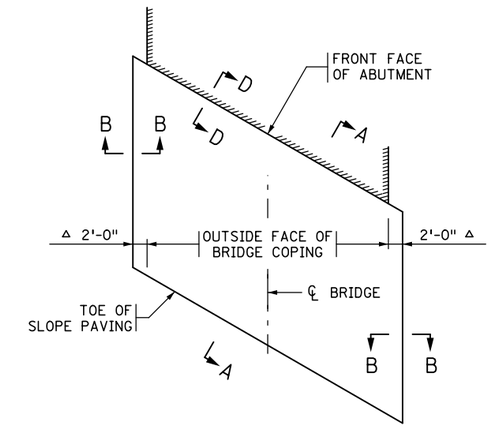

LAYOUT FOR SLOPES AT HIGH ABUTMENTS

△ 2'-0" FOR TANGENT BRIDGE SUPERSTRUCTURES. VARIES 2'-0" MINIMUM FOR CURVED BRIDGE SUPERSTRUCTURES.

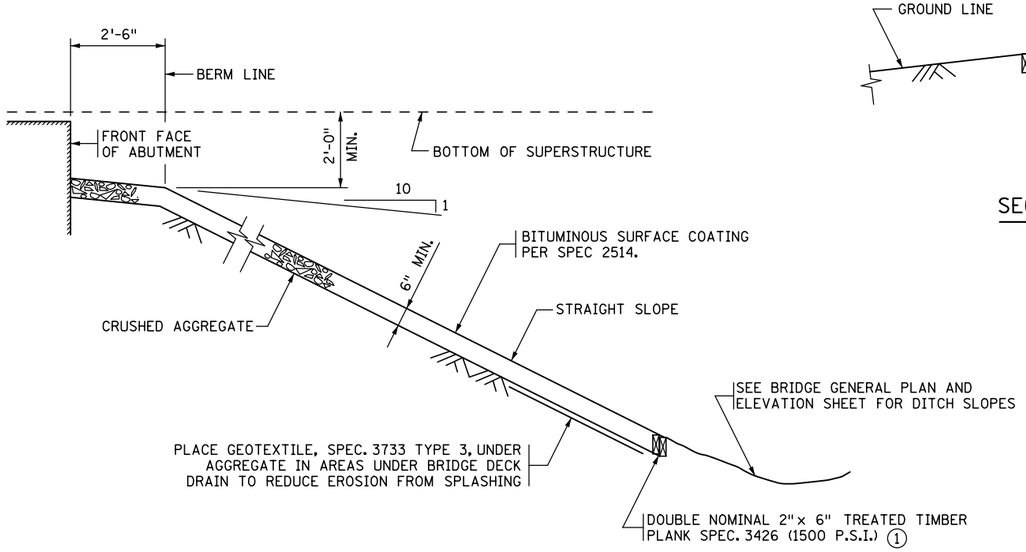

SECTION A-A

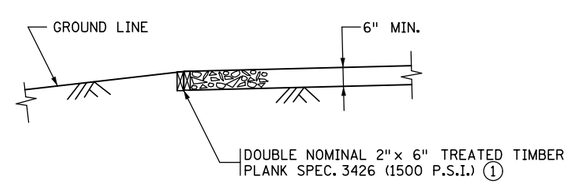

SECTION B-B

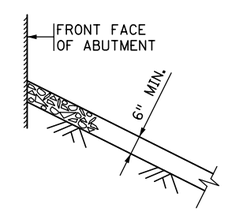

SECTION D-D

HIGH ABUTMENTS

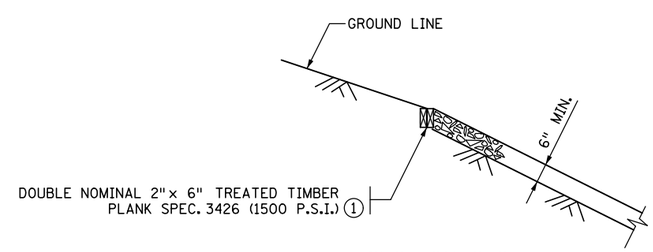

SECTION C-C

GENERAL NOTES

SLOPES ARE EXPRESSED AS A RATIO OF VERTICAL DISTANCE: HORIZONTAL DISTANCE.

REFER TO SPECIFICATION 2514 FOR ADDITIONAL INFORMATION.

1 PRESERVATIVE TREATMENT PER SPEC. 3491, TABLE 3491-1, PRODUCT AND USAGE CATEGORY E2, AWPA USE CATEGORY UC4B. REFER TO MNDOT APPROVED PRODUCTS LIST.

REVISION: 09-11-2014

APPROVED: SEPTEMBER 26, 2003

STATE BRIDGE ENGINEER

CERTIFIED BY _____ LICENSED PROFESSIONAL ENGINEER _____ DATE

NAME: LIC. NO.

TITLE: STABILIZED AGGREGATE SLOPE PAVING UNDER BRIDGES

DES: DR: CHK: CHK:

SHEET NO. OF SHEETS

APPROVED:

FIG. 5-397.302

BRIDGE NO.

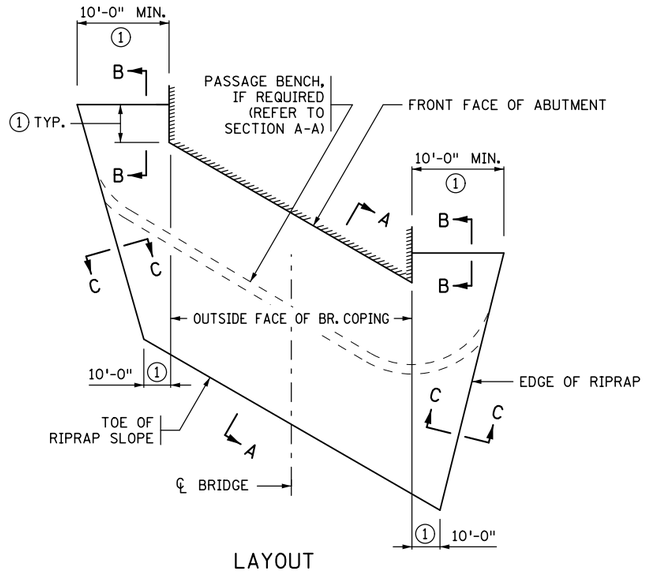

LAYOUT

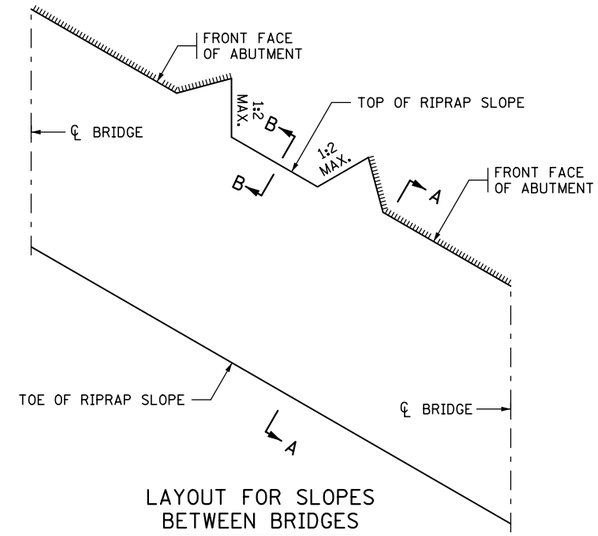

LAYOUT FOR SLOPES BETWEEN BRIDGES

GENERAL NOTES

GEOTEXTILE FILTER TYPE 7 PER SPEC. 3733, BY THE SQ. YD.

RIPRAP PER SPEC. 2511, RANDOM RIPRAP CLASS ___ BY THE CU. YD.

SLOPES ARE EXPRESSED AS A RATIO OF VERTICAL DISTANCE : HORIZONTAL DISTANCE.

SLOPE BOTTOM OF TRENCHES 1:20 PARALLEL TO ABUTMENT FACE TO PROVIDE POSITIVE DRAINAGE.

1. SEE PLAN SHEET NO.__ FOR DIMENSIONS, AND FOR ELEVATIONS OF RIPRAP TOE AND PASSAGE BENCHES.
2. PLACE RIPRAP STARTING FROM THE BOTTOM OF THE SLOPE. DO NOT PLACE RIP RAP IN TRENCH UNTIL RIPRAP HAS BEEN PLACED ON ENTIRE SLOPE BENEATH THE TRENCH.
3. OVERLAP GEOTEXTILE FILTER 2'-0" MINIMUM.
4. WRAP GEOTEXTILE FILTER AROUND TOE, OVERHANG BETWEEN 1ST AND 2ND LAYER OF RIPRAP. USE HAND PLACEMENT OR SIMILAR METHODS TO ESTABLISH PROFILE AND PLACE FABRIC IF UNDER WATER.
5. BURY EDGES OF GEOTEXTILE FILTER TO DIRECT WATER FLOW OVER THE FABRIC WITHOUT UNDERMINING.
6. OMIT THE TRENCH SHOWN IN DETAIL "D" AND THE 15'-0" MAXIMUM SPACING BETWEEN TRENCHES FOR SLOPES 1:3 OR FLATTER.
7. SURFACE BENCHES WITH AGGREGATE CLASS 5 (INCIDENTAL TO RIPRAP). TIE BENCHES TO NATURAL GROUNDLINES OUTSIDE OF BRIDGE.

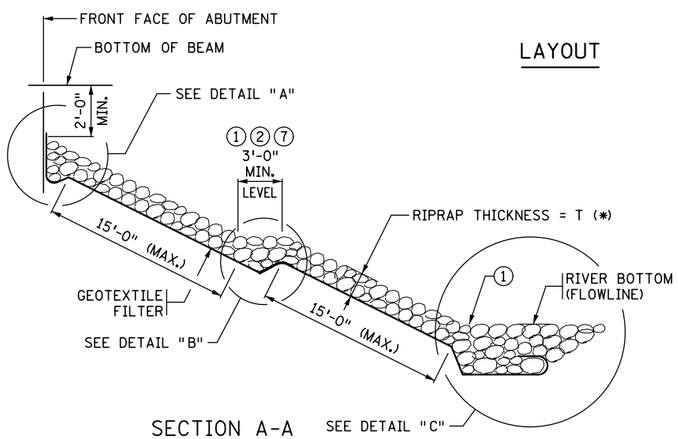

SECTION A-A
(WITH PASSAGE BENCH)

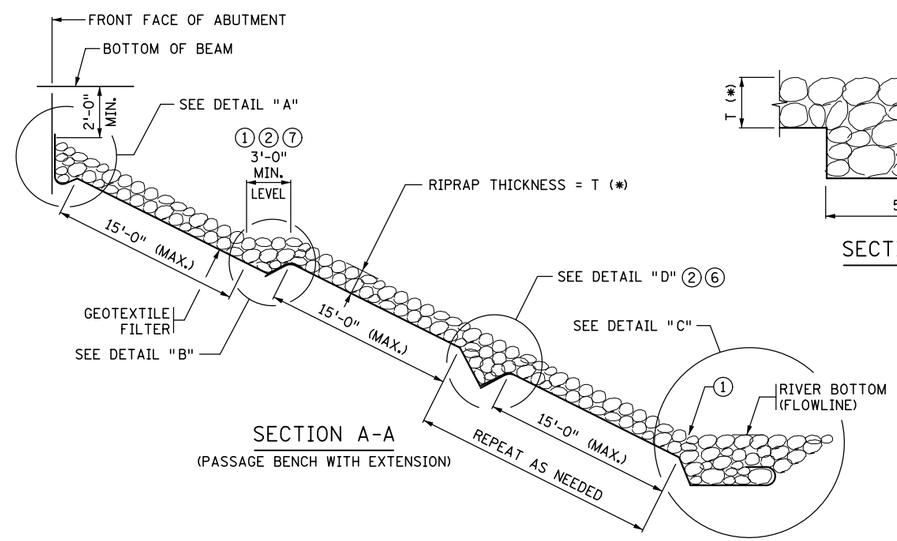

SECTION A-A
(PASSAGE BENCH WITH EXTENSION)

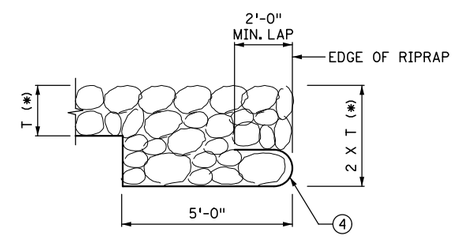

SECTION C-C

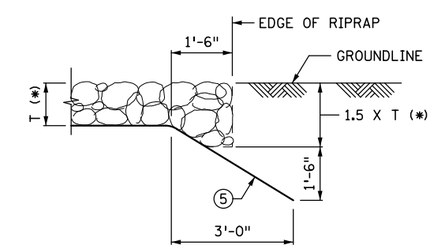

SECTION B-B

* DIMENSION T
CLASS III = 1'-6"
CLASS IV = 2'-0"
CLASS V = 2'-6"

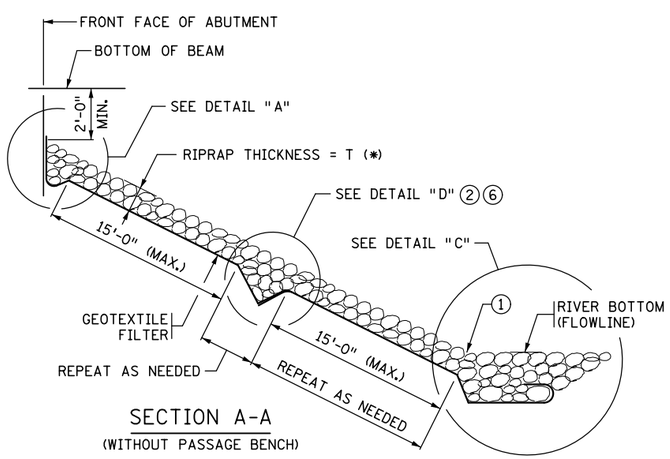

SECTION A-A
(WITHOUT PASSAGE BENCH)

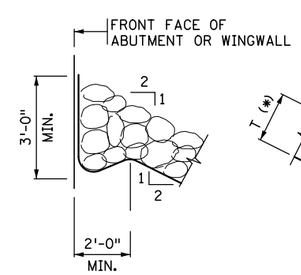

DETAIL "A"

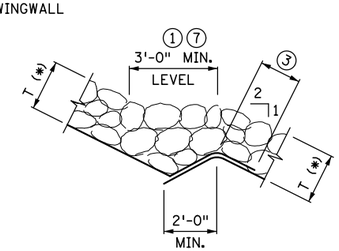

DETAIL "B"

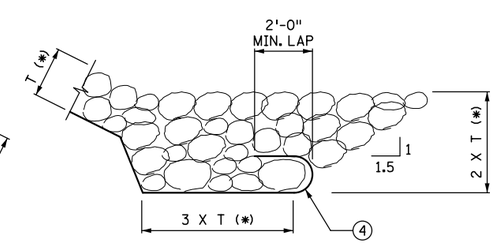

DETAIL "C"

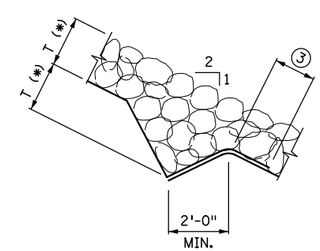

DETAIL "D"

REVISED: 01-05-2017

APPROVED: MAY 24, 2011
Nancy Daubenberger
STATE BRIDGE ENGINEER

CERTIFIED BY _____ LICENSED PROFESSIONAL ENGINEER _____ DATE
NAME: LIC. NO.

TITLE: RIPRAP SLOPE WITH GEOTEXTILE FILTER (SLOPES 1:2 AND FLATTER)

DES:	DR:
CHK:	CHK:

SHEET NO. OF SHEETS

FIG. 5-397.309

APPROVED:

BRIDGE NO.

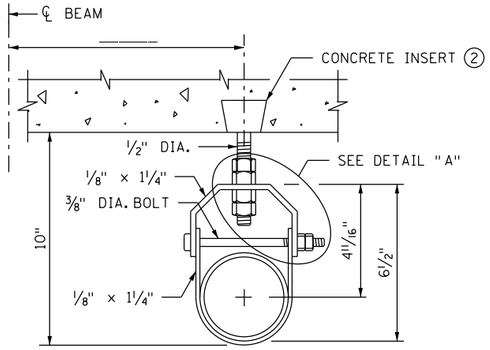

CONDUIT HANGER DETAIL

(FOR ____ CONDUIT SYSTEM)

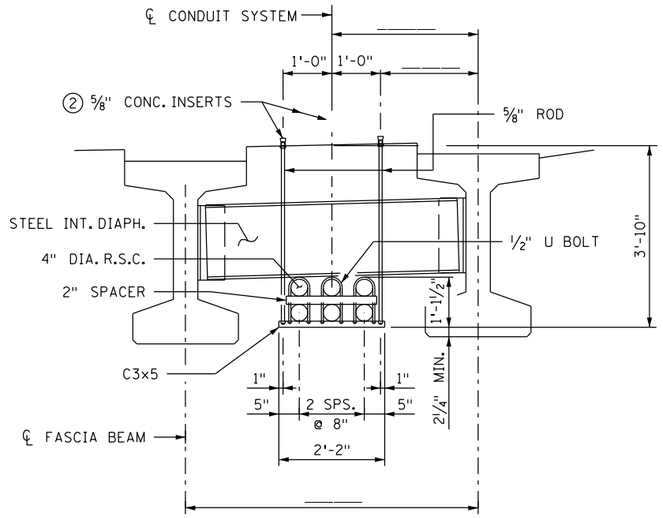

TRANSVERSE SECTION

(FOR ____ CONDUIT SYSTEM)

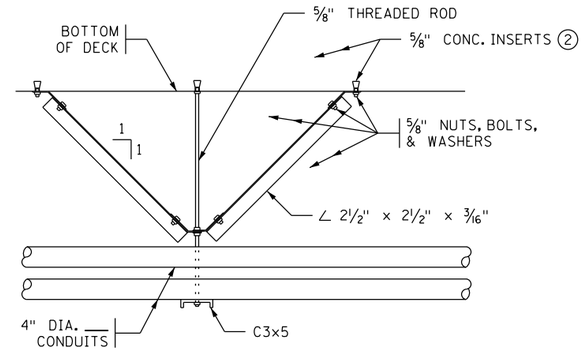

CENTERING DEVICE DETAIL - SIDE VIEW

(LOCATED ONLY ON A HANGER ADJACENT TO PIER)

SUMMARY OF QUANTITIES FOR CONDUIT SYSTEM (_____)

PRECAST HAND HOLES (STD. PLATE 8117)	____	UNITS
HANGER ASSEMBLY	____	UNITS
_" X _" CAST IRON JCT. BOX & SUPPORTS	____	UNITS
CONDUIT CAP	____	UNITS
DRAINAGE TEE	____	UNITS
COMBINATION EXPANSION/DEFLECTION FITTING	____	UNITS
_" RIGID STEEL CONDUIT	____	LIN. FT.
① _" PIPE SLEEVE	____	UNITS

ALL MATERIAL LISTED ABOVE IS INCLUDED IN PRICE BID FOR "CONDUIT SYSTEM (____)".

① SEE ABUTMENT SHEETS FOR LOCATION AND DETAILS.

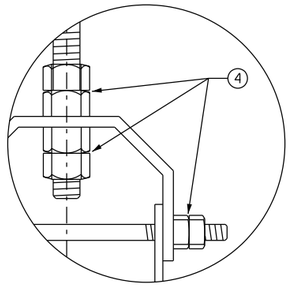

DETAIL "A"

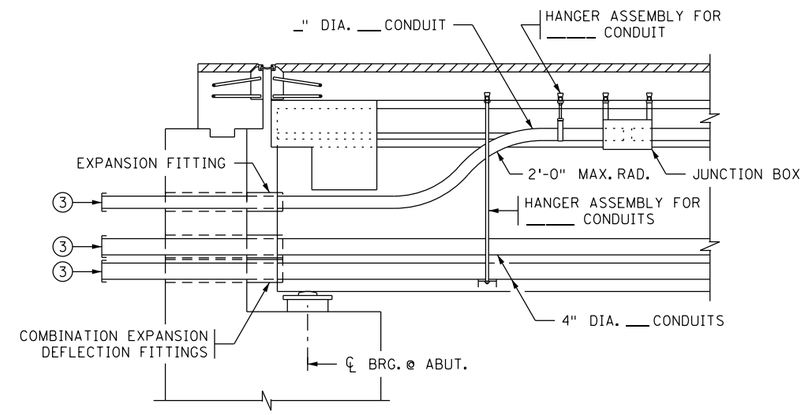

LONGITUDINAL SECTION

(FOR ____ CONDUIT SYSTEM)

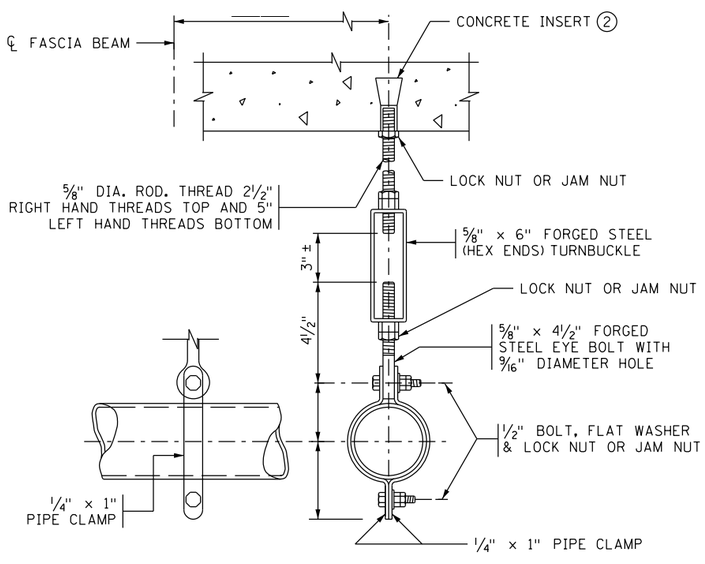

HANGER ASSEMBLY

EACH HANGER ASSEMBLY SHALL CONSIST OF CONCRETE INSERT, ⅝" DIA. ROD, PIPE CLAMPS, NUTS, BOLTS, WASHERS, TURNBUCKLE AND EYE BOLT

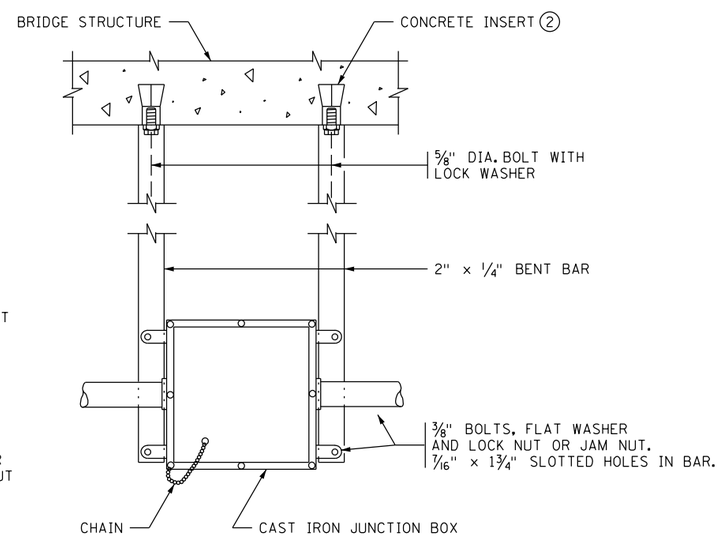

JUNCTION BOX DETAILS

GENERAL NOTES

RODS, EYE BOLTS AND PIPE CLAMPS SHALL COMPLY WITH SPEC. 3313, TYPE I.

TURNBUCKLES AND EYE BOLTS SHALL COMPLY WITH A.S.T.M. A235 CLASS A MINIMUM REQUIREMENTS.

FLAT BARS AND ANCHORAGES SHALL COMPLY WITH SPEC. 3306.

CONCRETE INSERTS SHALL BE APPROVED TYPE MALLEABLE IRON. MATERIAL AS PER SPEC. 3324, GRADE 35018. TAP AFTER GALVANIZING.

GALVANIZE BOLTS, NUTS, WASHERS, TURNBUCKLES, RODS, EYE BOLTS, AND INSERTS AS PER SPEC. 3392. GALVANIZE OTHER MATERIAL AS PER SPEC. 3394 AFTER FABRICATION.

PIPE SLEEVES SHALL COMPLY WITH SPEC. 3362.

② SPACE INSERTS AT 10'-0" MAXIMUM CENTERS.

③ CAP ENDS.

④ DOUBLE NUTS OR JAM NUTS OR LOCK NUT.

REVISION: 05-24-2012

APPROVED: SEPTEMBER 26, 2003

STATE BRIDGE ENGINEER

CERTIFIED BY _____ LICENSED PROFESSIONAL ENGINEER _____ DATE

NAME: _____ LIC. NO. _____

TITLE: CONDUIT SYSTEM FOR _____

DES: _____ DR: _____ CHK: _____ CHK: _____

SHEET NO. __ OF __ SHEETS

FIG. 5-397.402

APPROVED:

BRIDGE NO. _____

FILENAME: $$$$@FILENAME@$$$$
TIME : $@TIME@$
PLOTTED : $$$$@DATE@$$$$
PATH & FILENAME: $$$$@PATH\FILENAME@$$$$

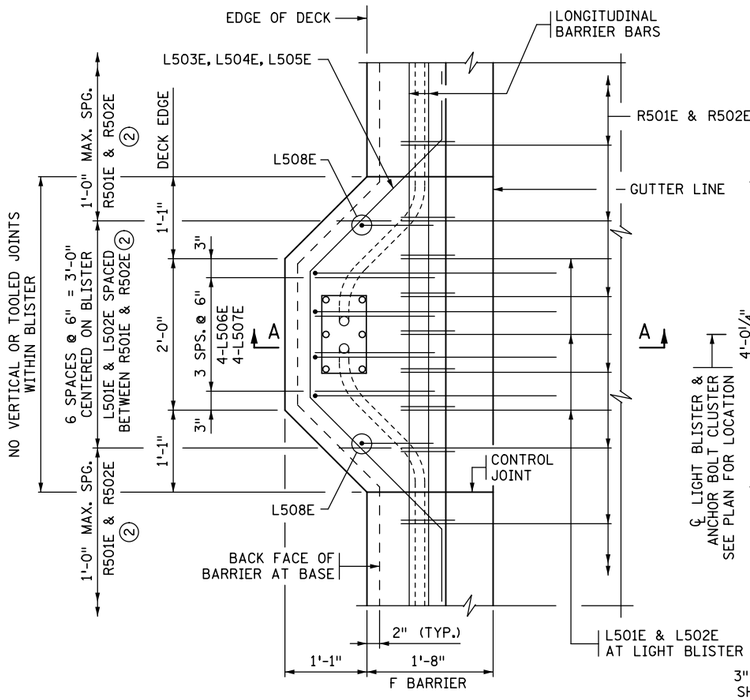

PLAN

LIGHT POLE ANCHORAGE ON TYPE F BARRIER ②

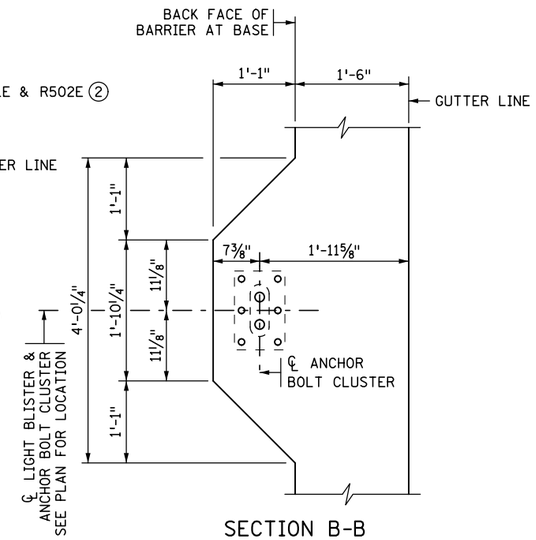

SECTION B-B

DECK NOT SHOWN FOR CLARITY

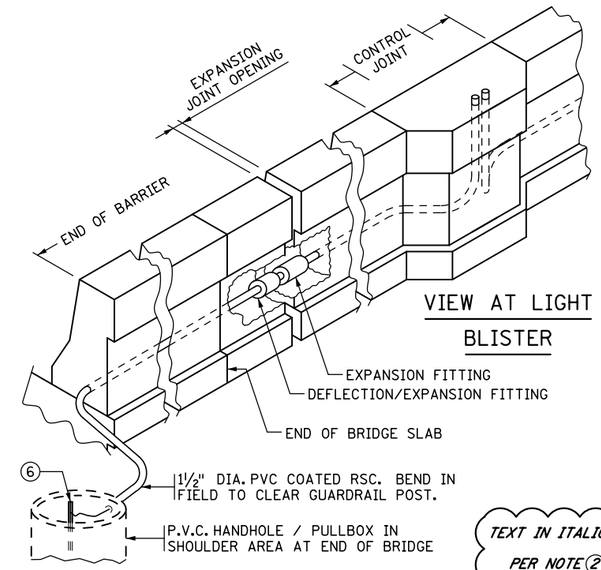

VIEW AT LIGHT BLISTER

VIEW AT END OF BRIDGE

APPROACH SLAB NOT SHOWN.
EXPANSION JOINT SHOWN.

GENERAL NOTES

BOND AND GROUND THE CONDUIT SYSTEM (LIGHTING) IN ACCORDANCE WITH THE APPLICABLE PORTIONS OF SPEC. 2545.3.R.

ADDITIONAL BARRIER AND DECK CONCRETE REQUIRED TO CONSTRUCT THE LIGHT POLE ANCHORAGE IS INCIDENTAL TO THE CONCRETE BARRIER AND DECK CONCRETE PAY ITEMS, RESPECTIVELY.

ANCHOR BOLT CLUSTER IS INCLUDED IN PRICE BID FOR "CONDUIT SYSTEM"

① EXTEND THE 1½" DIA. PVC COATED RIGID STEEL CONDUIT 3" ABOVE THE BARRIER AND INSTALL CAP.

② SEE CONCRETE BARRIER SHEETS FOR TYPICAL BARRIER REINFORCEMENT. WEIGHT OF REINFORCEMENT IS INCLUDED IN PRICE BID FOR "REINFORCEMENT BARS (EPOXY COATED)."

③ BARS SHOWN ARE FOR ONE LIGHT BLISTER.

④ WRAP PER SPEC. 2565.3.D.7.

⑤ PROVIDE COMBINATION DEFLECTION/EXPANSION FITTING PER SPEC. 3839.

⑥ PLACE GROUND ROD IN EACH HANDHOLE WITH EXOTHERMIC WELD FROM ROD TO WIRE.

TEXT IN ITALICS ARE DESIGNER NOTES. REMOVE PRIOR TO PLOTTING FINAL PLAN.

PER NOTE ②, BE SURE TO ADD THE WEIGHT OF ADDITIONAL REBAR TO THE REINFORCEMENT QUANTITY.

DON'T SHOW COMBINATION DEFLECTION/EXPANSION FITTING OR EXPANSION JOINT OPENING IN BARRIER FOR INTEGRAL OR SEMI-INTEGRAL ABUTMENT BRIDGES.

ADD THE FOLLOWING NOTE TO EACH OF THE CONCRETE BARRIER SHEETS IN THE PLAN.....REFER TO THE "CONDUIT SYSTEM SHEET" FOR DETAILS AND ADDITIONAL REINFORCING FOR LIGHT BLISTERS.

TEXT IN ITALICS ARE DESIGNER NOTES. REMOVE PRIOR TO PLOTTING FINAL PLAN.

INSERT THE REQUIRED LENGTH IN THE BILL OF REINFORCENENT FOR L501E AND L502E.
L501E WITH WEARING COURSE = 5'-3"
L501E WITHOUT WEARING COURSE = 5'-7"
L502E WITH WEARING COURSE = 6'-6"
L502E WITHOUT WEARING COURSE = 6'-2"

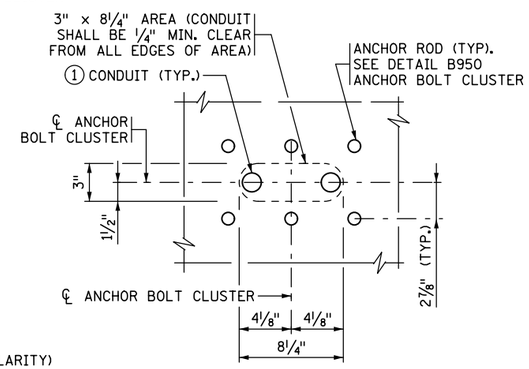

CONDUIT PLACEMENT DETAIL

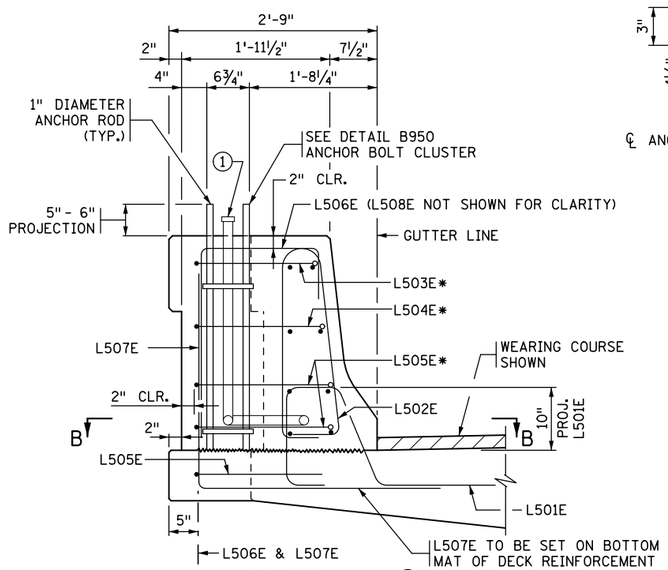

SECTION A-A ②

* L503E, L504E, L505E ARE SPACED WITH BARRIER LONGITUDINAL REINFORCEMENT. SEE CONCRETE BARRIER SHEET FOR SPACING.

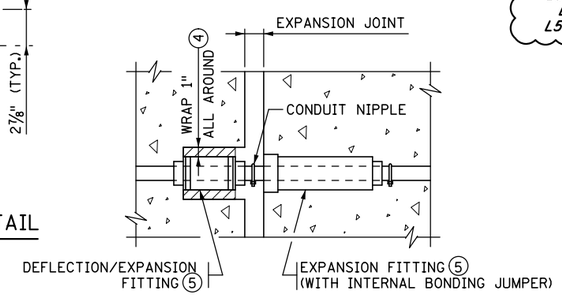

COMBINATION DEFLECTION/EXPANSION FITTING

IN BARRIER / SIDEWALK / CAST IN DECK

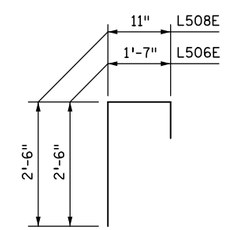

L506E, L508E

BILL OF REINFORCEMENT FOR BARRIER AT ONE LIGHT POLE ③

BAR	NO.	LENGTH	SHAPE	LOCATION
L501E	3			BARRIER DOWEL
L502E	3			BARRIER VERTICAL
L503E	1	9'-2"		LONGITUDINAL TIE
L504E	1	9'-4"		LONGITUDINAL TIE
L505E	3	9'-6"		LONGITUDINAL TIE
L506E	4	4'-11"		VERTICAL TIE
L507E	4	6'-0"		VERTICAL DOWEL
L508E	2	4'-3"		VERTICAL TIE

TOTAL REINFORCEMENT PER LIGHT POLE LOCATION IS 143 LBS.

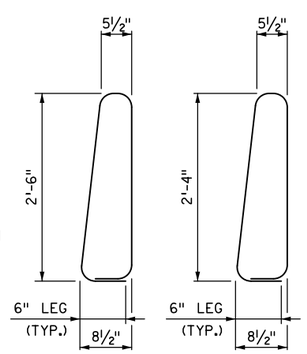

L502E WITH WEARING COURSE

L502E WITHOUT WEARING COURSE

TEXT IN ITALICS ARE DESIGNER NOTES. REMOVE PRIOR TO PLOTTING FINAL PLAN.

STRIKE OUT THE OPTION NOT USED ON L501E & L502E SHAPE.

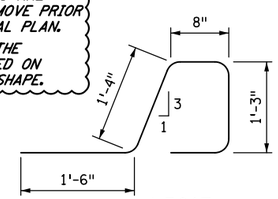

L501E WITH WEARING COURSE

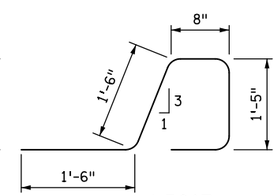

L501E WITHOUT WEARING COURSE

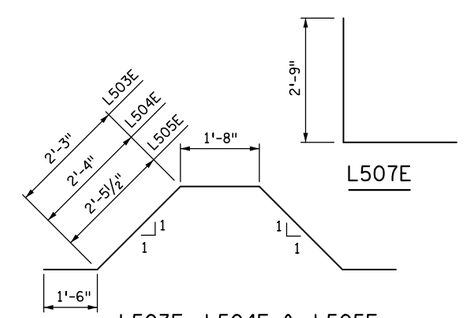

L503E, L504E & L505E

REVISED:

APPROVED: AUGUST 24, 2016
Kevin Western
STATE BRIDGE ENGINEER

CERTIFIED BY _____ LICENSED PROFESSIONAL ENGINEER _____ DATE

NAME: LIC. NO.

TITLE: CONDUIT SYSTEM (LIGHTING)
TYPE F CONCRETE BARRIER BLISTER, WITH OR WITHOUT WEARING COURSE

DES: DR: CHK: CHK:

SHEET NO. OF SHEETS

FIG. 5-397.406(A)

APPROVED:

BRIDGE NO.

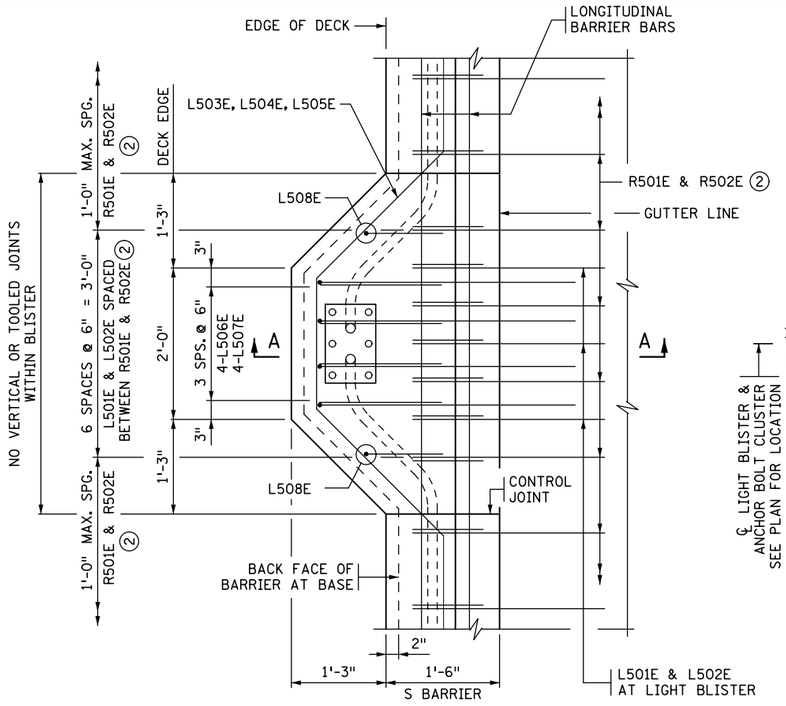

PLAN

LIGHT POLE ANCHORAGE ON TYPE S BARRIER ②

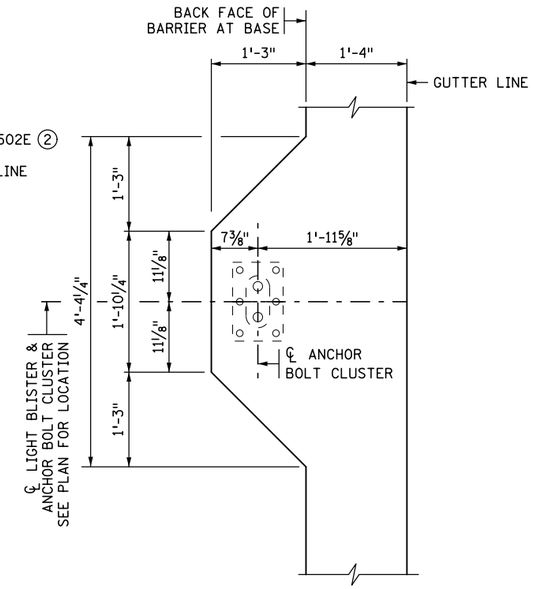

SECTION B-B

DECK NOT SHOWN FOR CLARITY

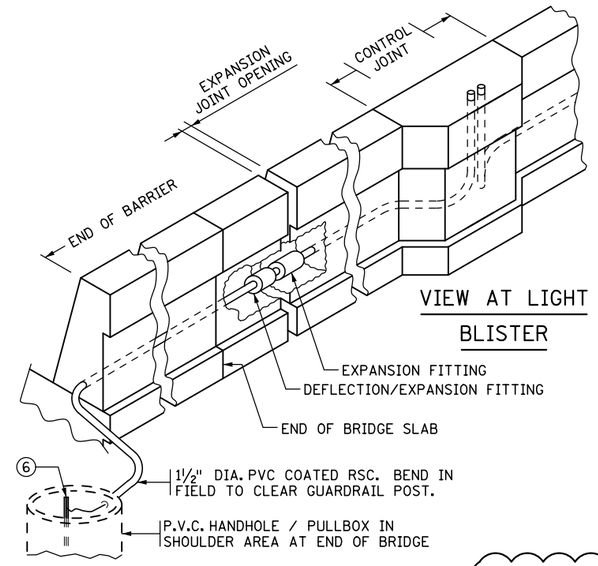

VIEW AT LIGHT BLISTER

VIEW AT END OF BRIDGE

APPROACH SLAB NOT SHOWN.
EXPANSION JOINT SHOWN.

GENERAL NOTES

BOND AND GROUND THE CONDUIT SYSTEM (LIGHTING) IN ACCORDANCE WITH THE APPLICABLE PORTIONS OF SPEC. 2545.3.R.

ADDITIONAL BARRIER AND DECK CONCRETE REQUIRED TO CONSTRUCT THE LIGHT POLE ANCHORAGE IS INCIDENTAL TO THE CONCRETE BARRIER AND DECK CONCRETE PAY ITEMS, RESPECTIVELY.

ANCHOR BOLT CLUSTER IS INCLUDED IN PRICE BID FOR "CONDUIT SYSTEM"

① EXTEND THE 1½" DIA. PVC COATED RIGID STEEL CONDUIT 3" ABOVE THE BARRIER AND INSTALL CAP.

② SEE CONCRETE BARRIER SHEETS FOR TYPICAL BARRIER REINFORCEMENT. WEIGHT OF REINFORCEMENT IS INCLUDED IN PRICE BID FOR "REINFORCEMENT BARS (EPOXY COATED)."

③ BARS SHOWN ARE FOR ONE LIGHT BLISTER.

④ WRAP PER SPEC. 2565.3.D.7.

⑤ PROVIDE COMBINATION DEFLECTION/EXPANSION FITTING PER SPEC. 3839.

⑥ PLACE GROUND ROD IN EACH HANDHOLE WITH EXOTHERMIC WELD FROM ROD TO WIRE.

TEXT IN ITALICS ARE DESIGNER NOTES. REMOVE PRIOR TO PLOTTING FINAL PLAN.

PER NOTE ②, BE SURE TO ADD THE WEIGHT OF ADDITIONAL REBAR TO THE REINFORCEMENT QUANTITY.

DON'T SHOW COMBINATION DEFLECTION/EXPANSION FITTING OR EXPANSION JOINT OPENING IN BARRIER FOR INTEGRAL OR SEMI-INTEGRAL ABUTMENT BRIDGES.

ADD THE FOLLOWING NOTE TO EACH OF THE CONCRETE BARRIER SHEETS IN THE PLAN.....REFER TO THE "CONDUIT SYSTEM SHEET" FOR DETAILS AND ADDITIONAL REINFORCING FOR LIGHT BLISTERS.

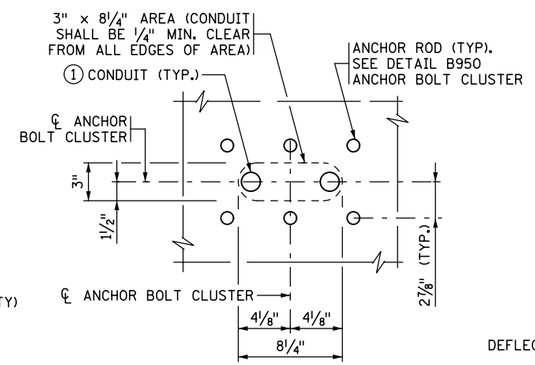

CONDUIT PLACEMENT DETAIL

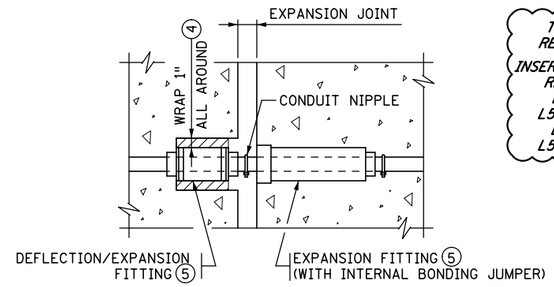

COMBINATION DEFLECTION/EXPANSION FITTING

IN BARRIER / SIDEWALK / CAST IN DECK

TEXT IN ITALICS ARE DESIGNER NOTES. REMOVE PRIOR TO PLOTTING FINAL PLAN.

INSERT THE REQUIRED LENGTH IN THE BILL OF REINFORCENENT FOR L501E AND L502E.
L501E WITH WEARING COURSE = 5'-4"
L501E WITH WEARING COURSE = 5'-7"
L502E WITH WEARING COURSE = 7'-5"
L502E WITH WEARING COURSE = 7'-1"

BILL OF REINFORCEMENT FOR BARRIER AT ONE LIGHT POLE ③

BAR	NO.	LENGTH	SHAPE	LOCATION
L501E	3			BARRIER DOWEL
L502E	3			BARRIER VERTICAL
L503E	1	9'-2"		LONGITUDINAL TIE
L504E	1	9'-8"		LONGITUDINAL TIE
L505E	3	10'-2"		LONGITUDINAL TIE
L506E	4	5'-2"		VERTICAL TIE
L507E	4	6'-8"		VERTICAL DOWEL
L508E	2	4'-4"		VERTICAL TIE

TOTAL REINFORCEMENT PER LIGHT POLE LOCATION IS 150 LBS.

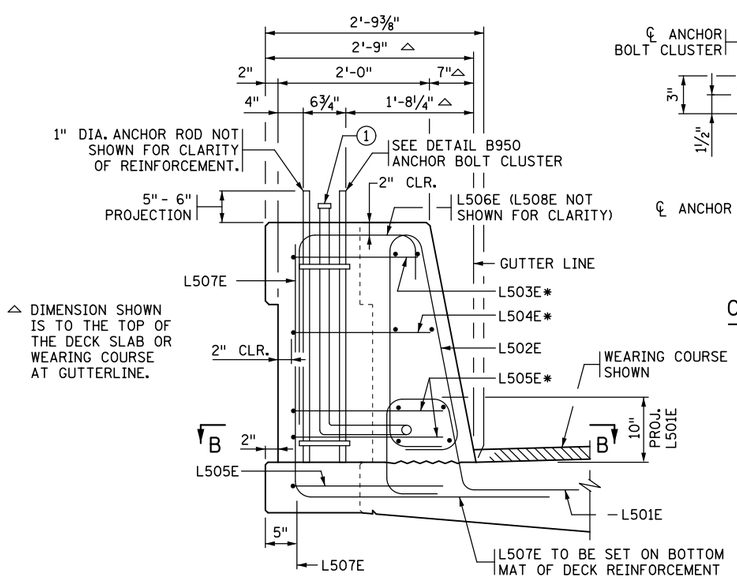

SECTION A-A ②

* L503E, L504E, L505E ARE SPACED WITH BARRIER LONGITUDINAL REINFORCEMENT. SEE CONCRETE BARRIER SHEET FOR SPACING.

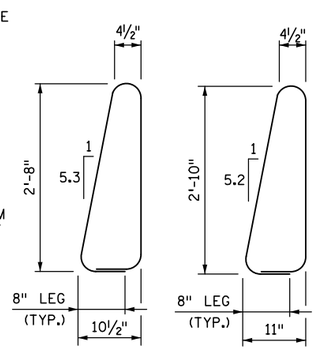

L502E
WITHOUT WEARING COURSE

L502E
WITH WEARING COURSE

TEXT IN ITALICS ARE DESIGNER NOTES. REMOVE PRIOR TO PLOTTING FINAL PLAN.

STRIKE OUT THE OPTION NOT USED ON L501E & L502E SHAPE.

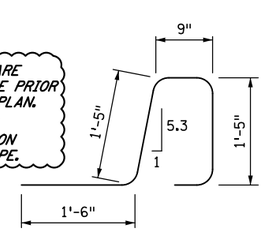

L501E
WITHOUT WEARING COURSE

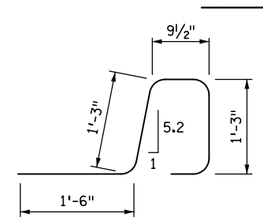

L501E
WITH WEARING COURSE

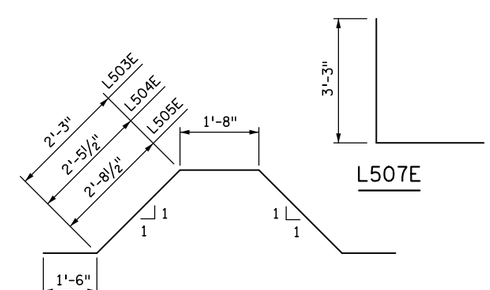

L503E, L504E & L505E

L507E

REVISION:

APPROVED: AUGUST 24, 2016
Kevin Western
STATE BRIDGE ENGINEER

CERTIFIED BY _____ LICENSED PROFESSIONAL ENGINEER _____ DATE
NAME: LICENSE NO.

TITLE: CONDUIT SYSTEM (LIGHTING)
36" TYPE S CONCRETE BARRIER BLISTER, WITH OR WITHOUT WEARING COURSE

DES: DR: CHK: CHK:

SHEET NO. OF SHEETS

APPROVED:

FIG. 5-397.406(B)

BRIDGE NO.

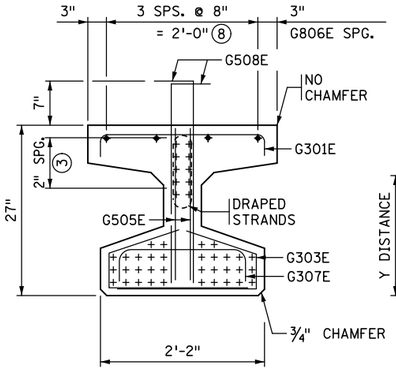

END VIEW

CUT STRANDS FLUSH WITH CONCRETE. COVER ENDS WITH SEALANT PER APPROVED PRODUCTS LIST "BRIDGE-PRESTRESSED BEAMS-CUT STRAND SEALANT."

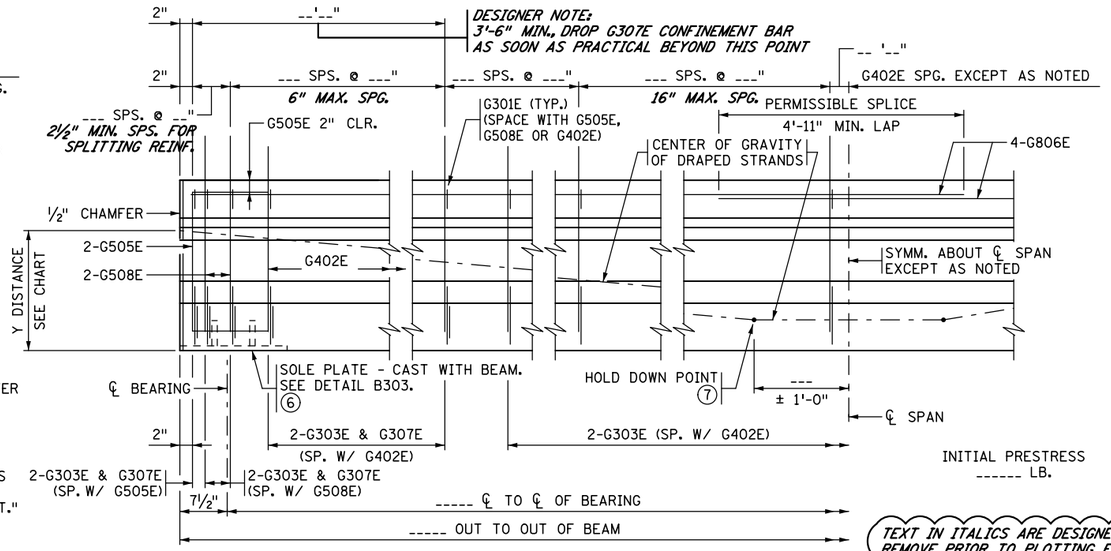

INITIAL PRESTRESS
------ LB.

BEAM ELEVATION

TEXT IN ITALICS ARE DESIGNER NOTES. REMOVE PRIOR TO PLOTTING FINAL PLAN.

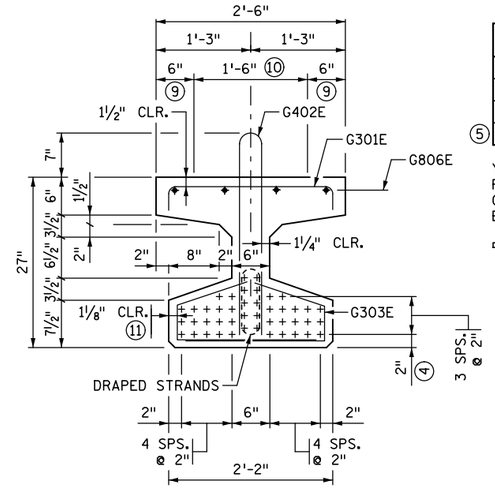

SECTION AT ℄ SPAN

Y DISTANCES (INCHES)	NO.	℄ SPAN	END
STRAIGHT STRANDS	----	----	
DRAPED STRANDS	----	----	---- ▫
(5) TOTAL STRANDS	----	----	

Y = DISTANCE TO CENTER OF GRAVITY OF STRANDS FROM BOTTOM OF BEAM. ALL STRANDS SPACED 2" CENTER TO CENTER, HORIZONTALLY AND VERTICALLY, EXCEPT AS NOTED.

▫ A TOLERANCE OF ± 1" WILL BE PERMITTED IN THIS DIMENSION.

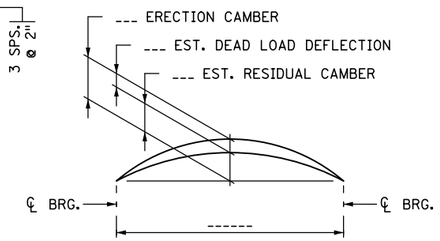

CAMBER DIAGRAM

DEAD LOAD DEFLECTION SHOWN IS FOR WEIGHT OF SLAB, WEARING COURSE, BARRIER, SIDEWALK AND MEDIAN WHERE APPLICABLE.

CONTRACTOR WILL TAKE ELEVATIONS AT TOP OF BEAMS AFTER ERECTION AND WILL ALLOW FOR DEFLECTION SHOWN TO ENABLE BUILDING FORMS TO CORRECT GRADE AND SPECIFIED SLAB THICKNESS. PROVIDE COPY OF ELEVATIONS TO THE ENGINEER.

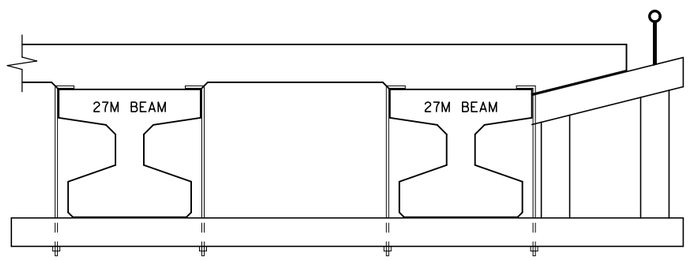

OVERHANG SUPPORT CONCEPT SKETCH

SEE THE "CONSTRUCTION NOTES" ON FRONT PORTION OF THE BRIDGE PLANS. THIS CONCEPT HAS BEEN USED SUCCESSFULLY ON PREVIOUS PROJECTS. CONTRACTORS MAY CONSIDER THIS OR ANOTHER SYSTEM AT THEIR DISCRETION.

DESIGNER NOTE: ADD STANDARD TEMPORARY BRACING NOTE FOR 27M PCB TO THE "CONSTRUCTION NOTES" ON THE FRONT PORTION OF THE PLANS.

CONTRACTOR SHALL VERIFY STABILITY OF FASCIA BEAMS FROM OVERTURNING (NO PERMANENT BEAM DIAPHRAGMS ARE PRESENT). CONTRACTOR SHALL PROVIDE TEMPORARY BRACING.

CALCULATED PRESTRESS LOSSES	
ELASTIC SHORTENING LOSS	---- KSI
LONG TERM LOSSES	---- KSI
TOTAL LOSSES	---- KSI

MINIMUM CONCRETE STRENGTH - K.S.I.	
(1) f'cI	(2) f'c
---- KSI	---- KSI

DESIGNER NOTE: INDICATE MIN. REQUIRED CONCRETE STRENGTH, ROUND CONCRETE STRENGTH TO ONE TENTH KSI.

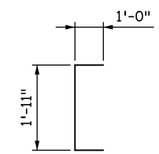

G505E

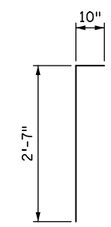

G508E

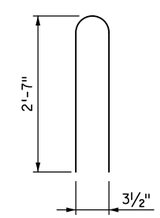

G402E

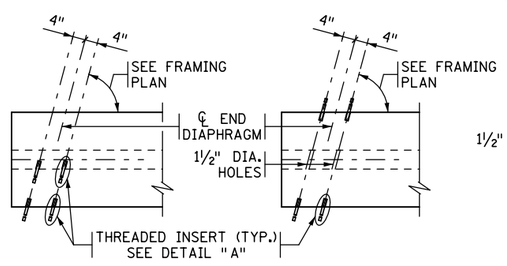

PLAN AT FASCIA BEAMS

PLAN AT INTERIOR BEAMS

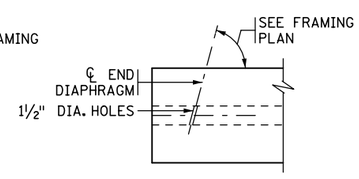

PLAN

DESIGNER NOTE: MIN. DISTANCE BETWEEN THREADED INSERT AND END OF BEAM IS 3".

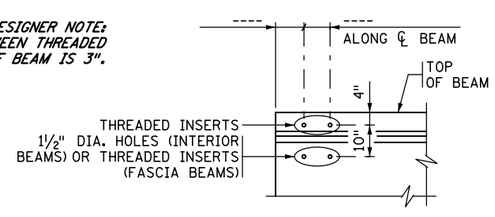

ELEVATION

CONCRETE END DIAPHRAGM

PARAPET ABUTMENT
(SEE DETAIL B814 FOR DIAPHRAGM DETAILS)

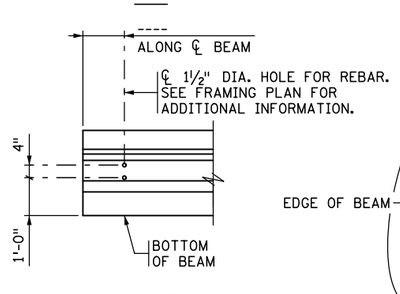

ELEVATION

CONCRETE END DIAPHRAGM

SEE SUPERSTRUCTURE DETAILS AND REINFORCEMENT FOR DIAPHRAGM DETAILS.

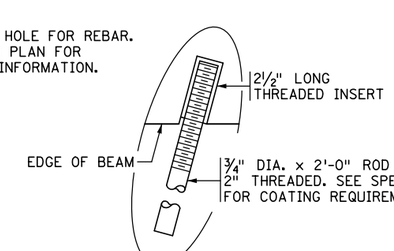

DETAIL "A"

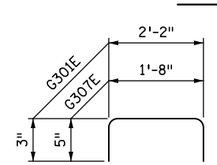

G301E & G307E

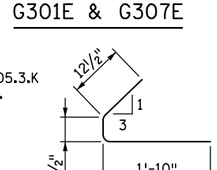

G303E

GENERAL NOTES

PROVIDE HANDLING HOOKS OR DEVICES AS REQUIRED BY CONTRACTOR.

MARK EACH BEAM SHOWING BRIDGE NUMBER, CASTING DATE, AND INDIVIDUAL IDENTIFICATION LETTERS AND NUMBERS ON THE FACE OF THE BEAM, NEAR THE END, SO LOCATED THAT THEY WILL BE EXPOSED AFTER THE END DIAPHRAGMS HAVE BEEN CAST. MARK FASCIA BEAMS ON THE INSIDE FACE. ENSURE ALL MARKINGS ARE STENCILLED AND CLEARLY LEGIBLE. FOR LOCATION OF BEAMS, SEE FRAMING PLAN.

ALL MATERIAL AND WORK SHOWN OR NOTED ON THIS SHEET IS INCLUDED IN UNIT PRICE BID FOR PRESTRESSED CONCRETE BEAMS. SEE SPEC. 2405.

SEE FRAMING PLAN FOR BEAM END MARKED "X".

AS AN ALTERNATE TO THE END DIAPHRAGM ANCHORAGES SHOWN, THE CONTRACTOR MAY SUBMIT DETAILS OF A CAST-IN-PLACE ANCHORAGE TO THE ENGINEER FOR APPROVAL. ANCHORAGE MUST PROVIDE AN ULTIMATE PULL OUT STRENGTH OF 15 KIPS PER ANCHORAGE.

APPLY AN APPROVED SEALER TO THE SIDES OF THE BEAM NEAR EACH END PER THE SPECIAL PROVISIONS.

(1) MINIMUM CONCRETE STRENGTH AT TIME OF PRESTRESS TRANSFER.

(2) MINIMUM CONCRETE STRENGTH WHEN BEAM CAN BE TRANSPORTED AND INSTALLED.

(3) DRAPED STRANDS.

(4) STRAIGHT STRANDS.

(5) USE 0.6" DIA. 7-WIRE LOW RELAXATION PRESTRESSING STRAND, CONFORMING TO ASTM A416, GRADE 270.

(6) FOR INTEGRAL ABUTMENT, SOLE PLATE CAN BE ELIMINATED OR REPLACED WITH AN APPROVED PROTECTION PLATE. BEAMS DETAILED TO INCLUDE A TAPERED PLATE PER STANDARD FIGURE B309 MUST INCLUDE SOLE PLATE.

(7) CENTER OF GRAVITY OF HOLD DOWNS WHEN MULTIPLE HOLD DOWNS ARE USED.

(8) TWO INSIDE BARS MAY BE PLACED ADJACENT TO VERTICAL STIRRUP FOR TYING CONVENIENCE.

(9) STEEL TROWEL TO SMOOTH FINISH AND APPLY BOND BREAKER PER APPROVED PRODUCTS LIST.

(10) ROUGH FLOAT AND BROOM TRANSVERSELY FOR BOND PER SPEC. 2405.3.D.

(11) TYP. CLR. FOR ENTIRE BOTTOM FLANGE.

REVISED: DECEMBER 02, 2015

APPROVED: JANUARY 13, 2015

Nancy Daubenberger
STATE BRIDGE ENGINEER

CERTIFIED BY _____ LICENSED PROFESSIONAL ENGINEER _____ DATE

NAME: LIC. NO.

TITLE: 27" PRESTRESSED CONCRETE BEAM (PRETENSIONED) 27M-

BEAMS

DES: DR:
CHK: CHK:
SHEET NO. OF SHEETS

APPROVED:

FIG. 5-397.504

BRIDGE NO.

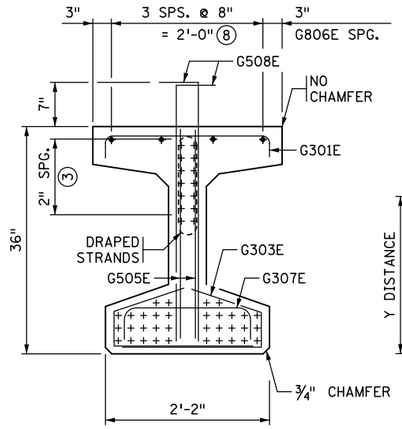

END VIEW

CUT STRANDS FLUSH WITH CONCRETE. COVER ENDS WITH SEALANT PER APPROVED PRODUCTS LIST "BRIDGE-PRESTRESSED BEAMS-CUT STRAND SEALANT."

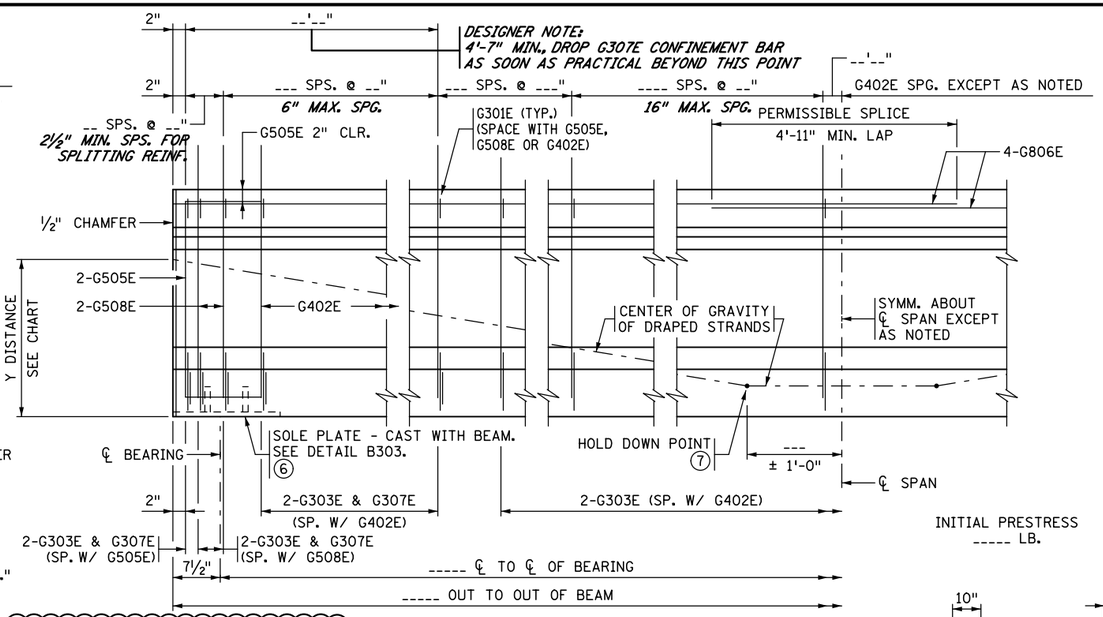

INITIAL PRESTRESS
----- LB.

BEAM ELEVATION

TEXT IN ITALICS ARE DESIGNER NOTES. REMOVE PRIOR TO PLOTTING FINAL PLAN.

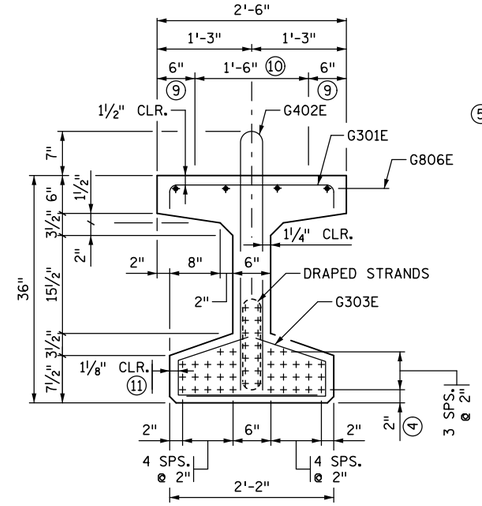

SECTION AT ℄ SPAN

Y DISTANCES (INCHES)			
	NO.	℄ SPAN	END
STRAIGHT STRANDS	----	----	╳
DRAPED STRANDS	----	----	---- ▫
(5) TOTAL STRANDS	----	----	╳

Y = DISTANCE TO CENTER OF GRAVITY OF STRANDS FROM BOTTOM OF BEAM. ALL STRANDS SPACED 2" CENTER TO CENTER, HORIZONTALLY AND VERTICALLY, EXCEPT AS NOTED.

▫ A TOLERANCE OF ± 1" WILL BE PERMITTED IN THIS DIMENSION.

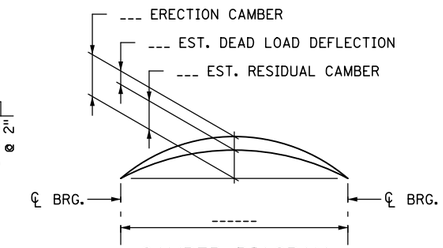

CAMBER DIAGRAM

ERECTION CAMBER SHOWN IS AFTER DIAPHRAGMS ARE IN PLACE.

DEAD LOAD DEFLECTION SHOWN IS FOR WEIGHT OF SLAB, WEARING COURSE, BARRIER, SIDEWALK AND MEDIAN WHERE APPLICABLE.

CONTRACTOR WILL TAKE ELEVATIONS AT TOP OF BEAMS AFTER ERECTION AND WILL ALLOW FOR DEFLECTION SHOWN TO ENABLE BUILDING FORMS TO CORRECT GRADE AND SPECIFIED SLAB THICKNESS. PROVIDE COPY OF ELEVATIONS TO THE ENGINEER.

CALCULATED PRESTRESS LOSSES	
ELASTIC SHORTENING LOSS	---- KSI
LONG TERM LOSSES	---- KSI
TOTAL LOSSES	---- KSI

MINIMUM CONCRETE STRENGTH - K.S.I.	
(1) f'ci	(2) f'c
--- KSI	--- KSI

DESIGNER NOTE: INDICATE MIN. REQUIRED CONCRETE STRENGTH, ROUND CONCRETE STRENGTH TO ONE TENTH KSI.

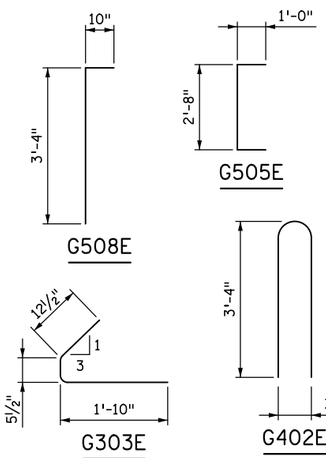

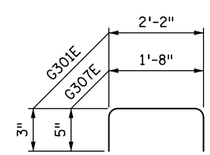

G301E & G307E

GENERAL NOTES

PROVIDE HANDLING HOOKS OR DEVICES AS REQUIRED BY CONTRACTOR.

MARK EACH BEAM SHOWING BRIDGE NUMBER, CASTING DATE, AND INDIVIDUAL IDENTIFICATION LETTERS AND NUMBERS ON THE FACE OF THE BEAM, NEAR THE END, SO LOCATED THAT THEY WILL BE EXPOSED AFTER THE END DIAPHRAGMS HAVE BEEN CAST. MARK FASCIA BEAMS ON THE INSIDE FACE. ENSURE ALL MARKINGS ARE STENCILLED AND CLEARLY LEGIBLE. FOR LOCATION OF BEAMS, SEE FRAMING PLAN.

ALL MATERIAL AND WORK SHOWN OR NOTED ON THIS SHEET IS INCLUDED IN UNIT PRICE BID FOR PRESTRESSED CONCRETE BEAMS. SEE SPEC. 2405.

SEE FRAMING PLAN FOR BEAM END MARKED "X" AND DIAPHRAGM SPACING.

AS AN ALTERNATE TO THE END DIAPHRAGM ANCHORAGES SHOWN, THE CONTRACTOR MAY SUBMIT DETAILS OF A CAST-IN-PLACE ANCHORAGE TO THE ENGINEER FOR APPROVAL. ANCHORAGE MUST PROVIDE AN ULTIMATE PULL OUT STRENGTH OF 15 KIPS PER ANCHORAGE.

APPLY AN APPROVED SEALER TO THE SIDES OF THE BEAM NEAR EACH END PER THE SPECIAL PROVISIONS.

(1) MINIMUM CONCRETE STRENGTH AT TIME OF PRESTRESS TRANSFER.

(2) MINIMUM CONCRETE STRENGTH WHEN BEAM CAN BE TRANSPORTED AND INSTALLED.

(3) DRAPED STRANDS.

(4) STRAIGHT STRANDS.

(5) USE 0.6" DIA. 7-WIRE LOW RELAXATION PRESTRESSING STRAND, CONFORMING TO ASTM A416, GRADE 270.

(6) FOR INTEGRAL ABUTMENT, SOLE PLATE CAN BE ELIMINATED OR REPLACED WITH AN APPROVED PROTECTION PLATE. BEAMS DETAILED TO INCLUDE A TAPERED PLATE PER STANDARD FIGURE B309 MUST INCLUDE SOLE PLATE.

(7) CENTER OF GRAVITY OF HOLD DOWNS WHEN MULTIPLE HOLD DOWNS ARE USED.

(8) TWO INSIDE BARS MAY BE PLACED ADJACENT TO VERTICAL STIRRUP FOR TYING CONVENIENCE.

(9) STEEL TROWEL TO SMOOTH FINISH AND APPLY BOND BREAKER PER APPROVED PRODUCTS LIST.

(10) ROUGH FLOAT AND BROOM TRANSVERSELY FOR BOND PER SPEC. 2405.3.D.

(11) TYP. CLR. FOR ENTIRE BOTTOM FLANGE.

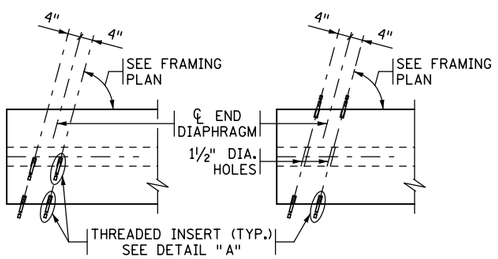

PLAN AT FASCIA BEAMS

PLAN AT INTERIOR BEAMS

DESIGNER NOTE: MIN. DISTANCE BETWEEN THREADED INSERT AND END OF BEAM IS 3".

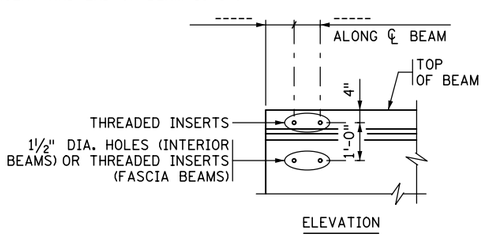

ELEVATION

CONCRETE END DIAPHRAGM

PARAPET ABUTMENT
(SEE DETAIL B814 FOR DIAPHRAGM DETAILS)

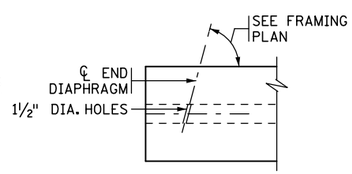

PLAN

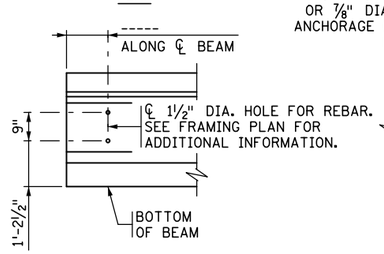

ELEVATION

CONCRETE END DIAPHRAGM

SEE SUPERSTRUCTURE DETAILS AND REINFORCEMENT FOR DIAPHRAGM DETAILS.

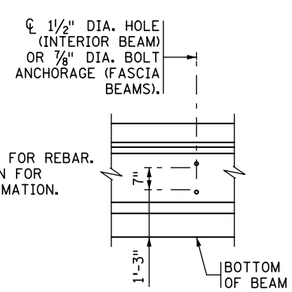

ELEVATION

STEEL INTERMEDIATE DIAPHRAGM

(SEE DETAIL B403 FOR DIAPHRAGM DETAILS)

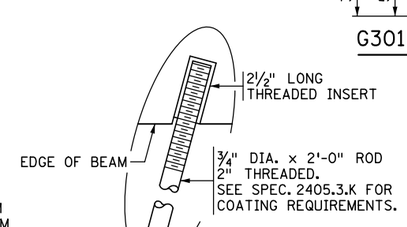

DETAIL "A"

REVISED: DECEMBER 02, 2015

APPROVED: JANUARY 13, 2015

Nancy Daubenberger
STATE BRIDGE ENGINEER

CERTIFIED BY _____ LICENSED PROFESSIONAL ENGINEER _____ DATE

NAME: LIC. NO.

TITLE: 36" PRESTRESSED CONCRETE BEAM (PRETENSIONED) 36M-

BEAMS

DES:	DR:	APPROVED:
CHK:	CHK:	

SHEET NO. OF SHEETS

FIG. 5-397.505

BRIDGE NO.

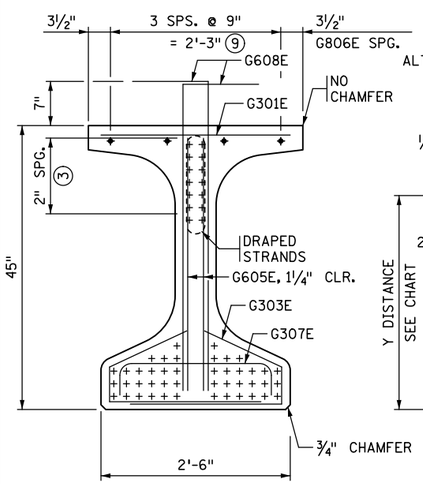

END VIEW

CUT STRANDS FLUSH WITH CONCRETE. COVER ENDS WITH SEALANT PER APPROVED PRODUCTS LIST "BRIDGE-PRESTRESSED BEAMS-CUT STRAND SEALANT."

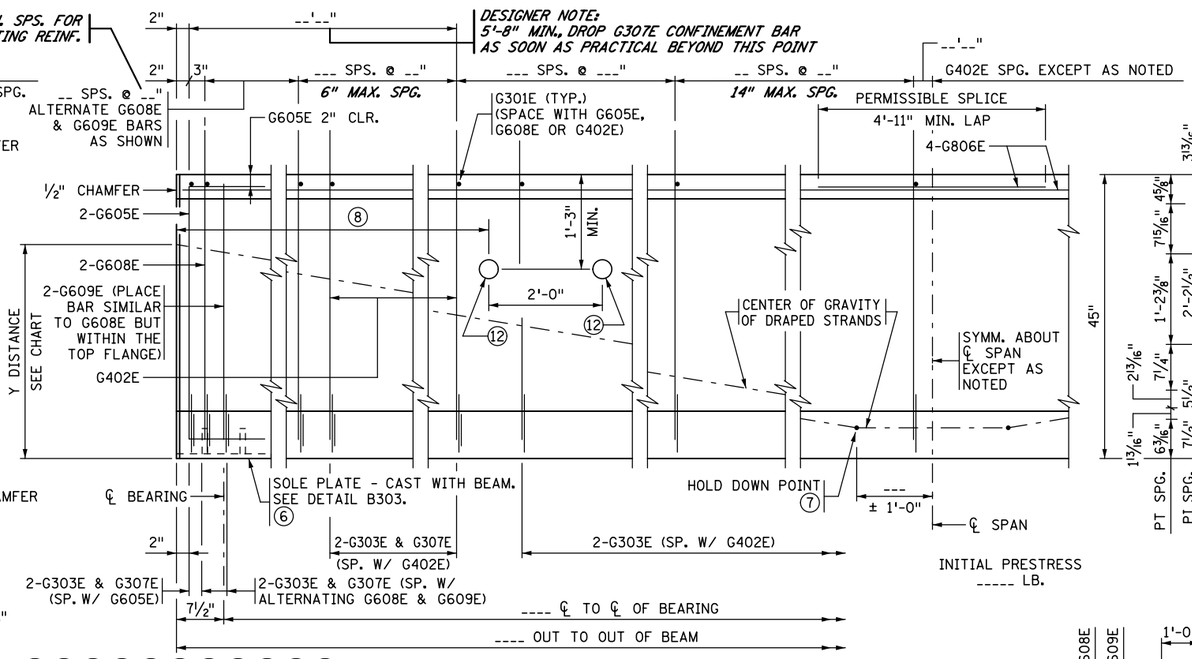

TEXT IN ITALICS ARE DESIGNER NOTES. REMOVE PRIOR TO PLOTTING FINAL PLAN.

BEAM ELEVATION

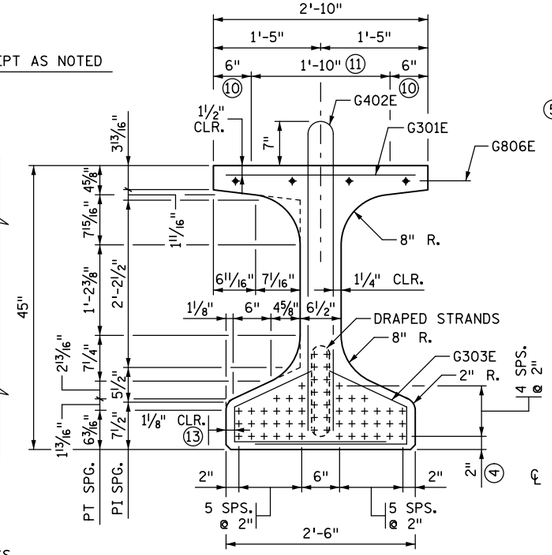

SECTION AT ℄ SPAN

Y DISTANCES (INCHES)			
	NO.	℄ SPAN	END
STRAIGHT STRANDS	----	----	
DRAPED STRANDS	----	----	---- ▫
(5) TOTAL STRANDS	----	----	

Y = DISTANCE TO CENTER OF GRAVITY OF STRANDS FROM BOTTOM OF BEAM. ALL STRANDS SPACED 2" CENTER TO CENTER, HORIZONTALLY AND VERTICALLY, EXCEPT AS NOTED.

▫ A TOLERANCE OF ± 1" WILL BE PERMITTED IN THIS DIMENSION.

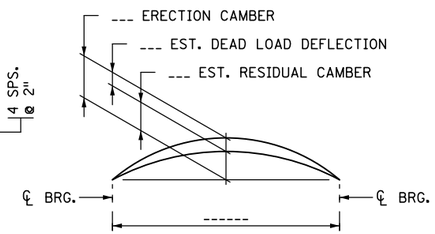

CAMBER DIAGRAM

ERECTION CAMBER SHOWN IS AFTER DIAPHRAGMS ARE IN PLACE.

DEAD LOAD DEFLECTION SHOWN IS FOR WEIGHT OF SLAB, WEARING COURSE, BARRIER, SIDEWALK AND MEDIAN WHERE APPLICABLE.

CONTRACTOR WILL TAKE ELEVATIONS AT TOP OF BEAMS AFTER ERECTION AND WILL ALLOW FOR DEFLECTION SHOWN TO ENABLE BUILDING FORMS TO CORRECT GRADE AND SPECIFIED SLAB THICKNESS. PROVIDE COPY OF ELEVATIONS TO THE ENGINEER.

CALCULATED PRESTRESS LOSSES	
ELASTIC SHORTENING LOSS	--- KSI
LONG TERM LOSSES	--- KSI
TOTAL LOSSES	--- KSI

MINIMUM CONCRETE STRENGTH - K.S.I.	
(1) f'ci	(2) f'c
--- KSI	--- KSI

DESIGNER NOTE: INDICATE MIN. REQUIRED CONCRETE STRENGTH, ROUND CONCRETE STRENGTH TO ONE TENTH KSI.

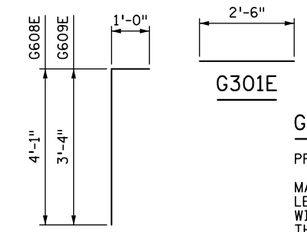

G608E & G609E

G301E

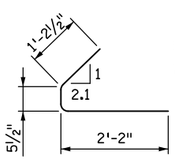

G303E

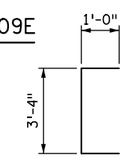

G605E

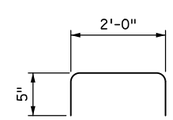

G307E

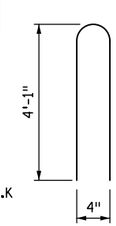

G402E

GENERAL NOTES

PROVIDE HANDLING HOOKS OR DEVICES AS REQUIRED BY CONTRACTOR.

MARK EACH BEAM SHOWING BRIDGE NUMBER, CASTING DATE, AND INDIVIDUAL IDENTIFICATION LETTERS AND NUMBERS ON THE FACE OF THE BEAM, NEAR THE END, SO LOCATED THAT THEY WILL BE EXPOSED AFTER THE END DIAPHRAGMS HAVE BEEN CAST. MARK FASCIA BEAMS ON THE INSIDE FACE. ENSURE ALL MARKINGS ARE STENCILLED AND CLEARLY LEGIBLE. FOR LOCATION OF BEAMS, SEE FRAMING PLAN.

ALL MATERIAL AND WORK SHOWN OR NOTED ON THIS SHEET IS INCLUDED IN UNIT PRICE BID FOR PRESTRESSED CONCRETE BEAMS. SEE SPEC. 2405.

SEE FRAMING PLAN FOR BEAM END MARKED "X" AND DIAPHRAGM SPACING.

AS AN ALTERNATE TO THE END DIAPHRAGM ANCHORAGES SHOWN, THE CONTRACTOR MAY SUBMIT DETAILS OF A CAST-IN-PLACE ANCHORAGE TO THE ENGINEER FOR APPROVAL. ANCHORAGE MUST PROVIDE AN ULTIMATE PULL OUT STRENGTH OF 15 KIPS PER ANCHORAGE.

APPLY AN APPROVED SEALER TO THE SIDES OF THE BEAM NEAR EACH END PER THE SPECIAL PROVISIONS.

(1) MINIMUM CONCRETE STRENGTH AT TIME OF PRESTRESS TRANSFER.

(2) MINIMUM CONCRETE STRENGTH WHEN BEAM CAN BE TRANSPORTED AND INSTALLED.

(3) DRAPED STRANDS.

(4) STRAIGHT STRANDS.

(5) USE 0.6" DIA. 7-WIRE LOW RELAXATION PRESTRESSING STRAND, CONFORMING TO ASTM A416, GRADE 270.

(6) FOR INTEGRAL ABUTMENT, SOLE PLATE CAN BE ELIMINATED OR REPLACED WITH AN APPROVED PROTECTION PLATE. BEAMS DETAILED TO INCLUDE A TAPERED PLATE PER STANDARD FIGURE B309 MUST INCLUDE SOLE PLATE.

(7) CENTER OF GRAVITY OF HOLD DOWNS WHEN MULTIPLE HOLD DOWNS ARE USED.

(8) DIMENSION DETERMINED BY CONTRACTOR. MAINTAIN 2" MINIMUM CLEAR FROM STRANDS.

(9) TWO INSIDE BARS MAY BE PLACED ADJACENT TO VERTICAL STIRRUP FOR TYING CONVENIENCE.

(10) STEEL TROWEL TO SMOOTH FINISH AND APPLY BOND BREAKER PER APPROVED PRODUCTS LIST.

(11) ROUGH FLOAT AND BROOM TRANSVERSELY FOR BOND PER SPEC. 2405.3.D.

(12) OPTIONAL: 3" MAX. DIA. SLEEVE FOR HAULING (AFTER INSTALLATION, COAT WITH APPROVED EPOXY BONDING AGENT & FILL WITH APPROVED NON-SHRINK GROUT).

(13) TYP. CLR. FOR ENTIRE BOTTOM FLANGE.

DESIGNER NOTE: MIN. DISTANCE BETWEEN THREADED INSERT AND END OF BEAM IS 3".

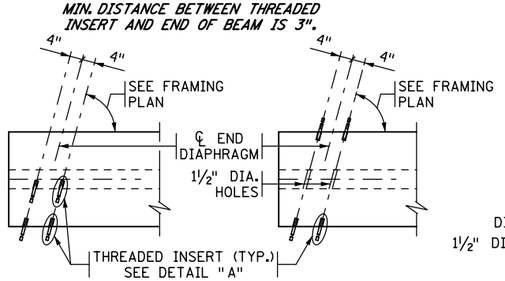

PLAN AT FASCIA BEAMS

PLAN AT INTERIOR BEAMS

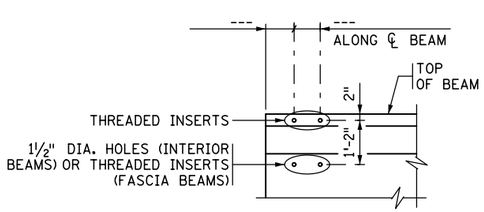

ELEVATION

CONCRETE END DIAPHRAGM

PARAPET ABUTMENT
(SEE DETAIL B814 FOR DIAPHRAGM DETAILS)

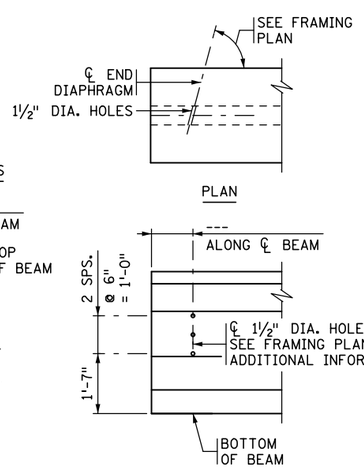

ELEVATION

CONCRETE END DIAPHRAGM

SEE SUPERSTRUCTURE DETAILS AND REINFORCEMENT FOR DIAPHRAGM DETAILS.

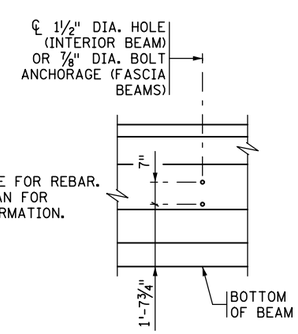

ELEVATION

STEEL INTERMEDIATE DIAPHRAGM

(SEE DETAIL B403 FOR DIAPHRAGM DETAILS)

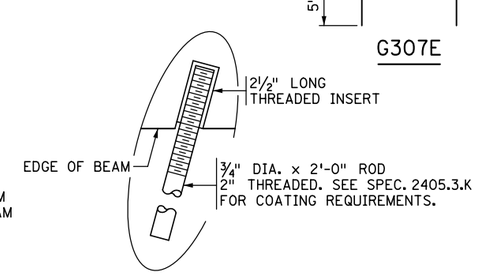

DETAIL "A"

REVISED: DECEMBER 02, 2015

APPROVED: JANUARY 13, 2015

Nancy Daubenberger
STATE BRIDGE ENGINEER

CERTIFIED BY _____ LICENSED PROFESSIONAL ENGINEER _____ DATE

NAME: LIC. NO.

TITLE: MN45" PRESTRESSED CONCRETE BEAM (PRETENSIONED) MN45-

BEAMS

FIG. 5-397.507

DES: DR: CHK: CHK: APPROVED:

SHEET NO. OF SHEETS

BRIDGE NO.

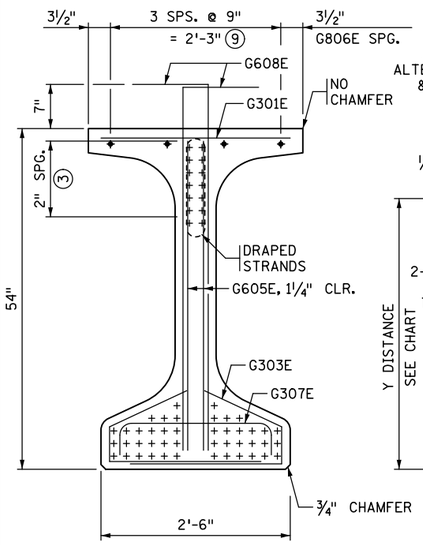

END VIEW

CUT STRANDS FLUSH WITH CONCRETE. COVER ENDS WITH SEALANT PER APPROVED PRODUCTS LIST "BRIDGE-PRESTRESSED BEAMS-CUT STRAND SEALANT."

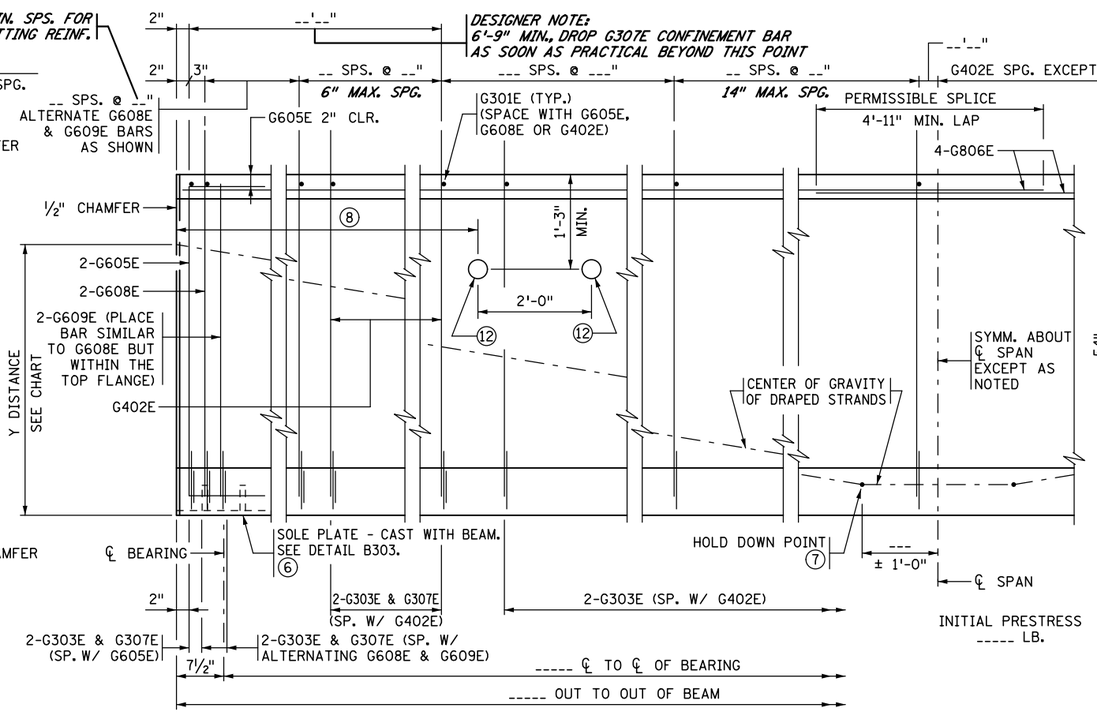

BEAM ELEVATION

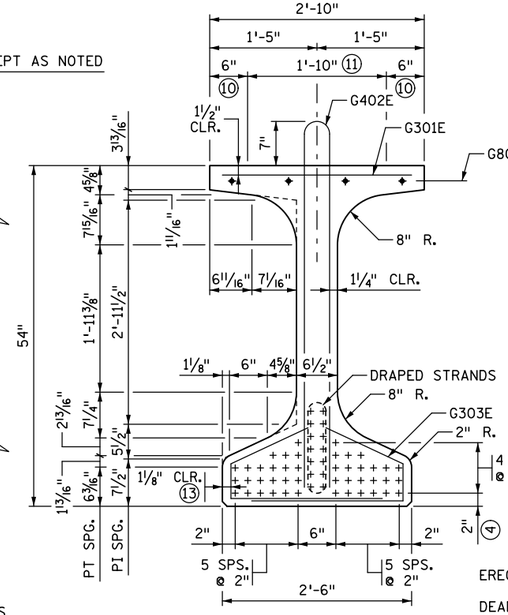

SECTION AT ℄ SPAN

Y DISTANCES (INCHES)			
	NO.	℄ SPAN	END
STRAIGHT STRANDS	---	---	
DRAPED STRANDS	---	---	--- ▫
⑤ TOTAL STRANDS	---	---	

Y = DISTANCE TO CENTER OF GRAVITY OF STRANDS FROM BOTTOM OF BEAM. ALL STRANDS SPACED 2" CENTER TO CENTER, HORIZONTALLY AND VERTICALLY, EXCEPT AS NOTED.

▫ A TOLERANCE OF ± 1" WILL BE PERMITTED IN THIS DIMENSION.

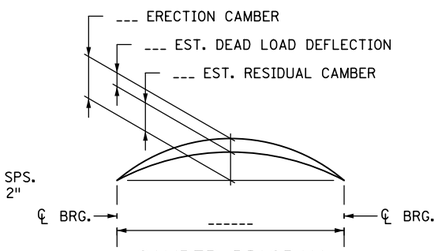

CAMBER DIAGRAM

ERECTION CAMBER SHOWN IS AFTER DIAPHRAGMS ARE IN PLACE.

DEAD LOAD DEFLECTION SHOWN IS FOR WEIGHT OF SLAB, WEARING COURSE, BARRIER, SIDEWALK AND MEDIAN WHERE APPLICABLE.

CONTRACTOR WILL TAKE ELEVATIONS AT TOP OF BEAMS AFTER ERECTION AND WILL ALLOW FOR DEFLECTION SHOWN TO ENABLE BUILDING FORMS TO CORRECT GRADE AND SPECIFIED SLAB THICKNESS. PROVIDE COPY OF ELEVATIONS TO THE ENGINEER.

TEXT IN ITALICS ARE DESIGNER NOTES. REMOVE PRIOR TO PLOTTING FINAL PLAN.

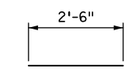

G301E

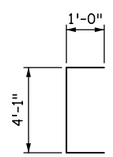

G605E

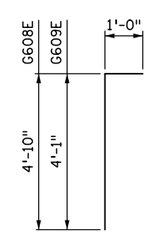

G608E & G609E

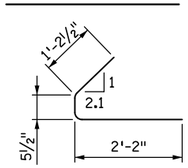

G303E

GENERAL NOTES

PROVIDE HANDLING HOOKS OR DEVICES AS REQUIRED BY CONTRACTOR.

MARK EACH BEAM SHOWING BRIDGE NUMBER, CASTING DATE, AND INDIVIDUAL IDENTIFICATION LETTERS AND NUMBERS ON THE FACE OF THE BEAM, NEAR THE END, SO LOCATED THAT THEY WILL BE EXPOSED AFTER THE END DIAPHRAGMS HAVE BEEN CAST. MARK FASCIA BEAMS ON THE INSIDE FACE. ENSURE ALL MARKINGS ARE STENCILLED AND CLEARLY LEGIBLE. FOR LOCATION OF BEAMS, SEE FRAMING PLAN.

ALL MATERIAL AND WORK SHOWN OR NOTED ON THIS SHEET IS INCLUDED IN UNIT PRICE BID FOR PRESTRESSED CONCRETE BEAMS. SEE SPEC. 2405.

SEE FRAMING PLAN FOR BEAM END MARKED "X" AND DIAPHRAGM SPACING.

AS AN ALTERNATE TO THE END DIAPHRAGM ANCHORAGES SHOWN, THE CONTRACTOR MAY SUBMIT DETAILS OF A CAST-IN-PLACE ANCHORAGE TO THE ENGINEER FOR APPROVAL. ANCHORAGE MUST PROVIDE AN ULTIMATE PULL OUT STRENGTH OF 15 KIPS PER ANCHORAGE.

APPLY AN APPROVED SEALER TO THE SIDES OF THE BEAM NEAR EACH END PER THE SPECIAL PROVISIONS.

① MINIMUM CONCRETE STRENGTH AT TIME OF PRESTRESS TRANSFER.

② MINIMUM CONCRETE STRENGTH WHEN BEAM CAN BE TRANSPORTED AND INSTALLED.

③ DRAPED STRANDS.

④ STRAIGHT STRANDS.

⑤ USE 0.6" DIA. 7-WIRE LOW RELAXATION PRESTRESSING STRAND, CONFORMING TO ASTM A416, GRADE 270.

⑥ FOR INTEGRAL ABUTMENT, SOLE PLATE CAN BE ELIMINATED OR REPLACED WITH AN APPROVED PROTECTION PLATE. BEAMS DETAILED TO INCLUDE A TAPERED PLATE PER STANDARD FIGURE B309 MUST INCLUDE SOLE PLATE.

⑦ CENTER OF GRAVITY OF HOLD DOWNS WHEN MULTIPLE HOLD DOWNS ARE USED.

⑧ DIMENSION DETERMINED BY CONTRACTOR. MAINTAIN 2" MINIMUM CLEAR FROM STRANDS.

⑨ TWO INSIDE BARS MAY BE PLACED ADJACENT TO VERTICAL STIRRUP FOR TYING CONVENIENCE.

⑩ STEEL TROWEL TO SMOOTH FINISH AND APPLY BOND BREAKER PER APPROVED PRODUCTS LIST.

⑪ ROUGH FLOAT AND BROOM TRANSVERSELY FOR BOND PER SPEC. 2405.3.D.

⑫ OPTIONAL: 3" MAX. DIA. SLEEVE FOR HAULING (AFTER INSTALLATION, COAT WITH APPROVED EPOXY BONDING AGENT & FILL WITH APPROVED NON-SHRINK GROUT).

⑬ TYP. CLR. FOR ENTIRE BOTTOM FLANGE.

DESIGNER NOTE:
MIN. DISTANCE BETWEEN THREADED INSERT AND END OF BEAM IS 3".

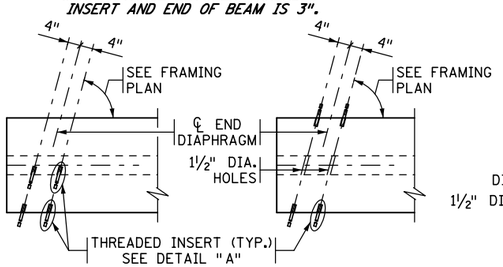

PLAN AT FASCIA BEAMS

PLAN AT INTERIOR BEAMS

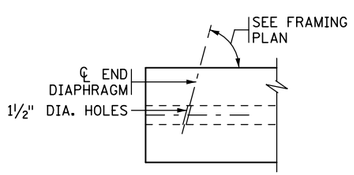

PLAN

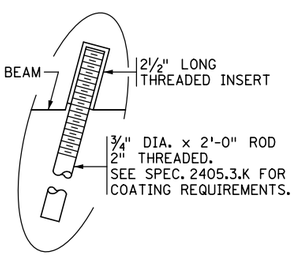

DETAIL "A"

CALCULATED PRESTRESS LOSSES	
ELASTIC SHORTENING LOSS	--- KSI
LONG TERM LOSSES	--- KSI
TOTAL LOSSES	--- KSI

MINIMUM CONCRETE STRENGTH - K.S.I.	
① f'cI	② f'c
--- KSI	--- KSI

DESIGNER NOTE:
INDICATE MIN. REQUIRED CONCRETE STRENGTH, ROUND CONCRETE STRENGTH TO ONE TENTH KSI.

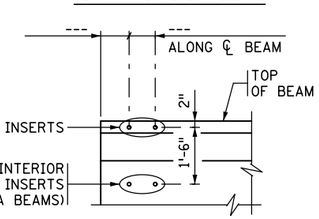

ELEVATION

CONCRETE END DIAPHRAGM

PARAPET ABUTMENT
(SEE DETAIL B814 FOR DIAPHRAGM DETAILS)

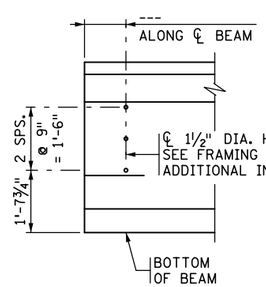

ELEVATION

CONCRETE END DIAPHRAGM

SEE SUPERSTRUCTURE DETAILS AND REINFORCEMENT FOR DIAPHRAGM DETAILS.

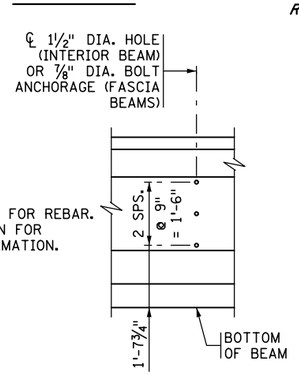

ELEVATION

STEEL INTERMEDIATE DIAPHRAGM

(SEE DETAIL B403 FOR DIAPHRAGM DETAILS)

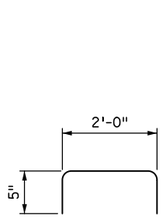

G307E

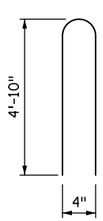

G402E

REVISED: DECEMBER 02, 2015

APPROVED: JANUARY 13, 2015

Nancy Daubenberger
STATE BRIDGE ENGINEER

CERTIFIED BY _____ LICENSED PROFESSIONAL ENGINEER _____ DATE

NAME: LIC. NO.

TITLE: MN54" PRESTRESSED CONCRETE BEAM (PRETENSIONED) MN54-

BEAMS

FIG. 5-397.508

DES:	DR:	APPROVED:	BRIDGE NO.
CHK:	CHK:		

SHEET NO. OF SHEETS

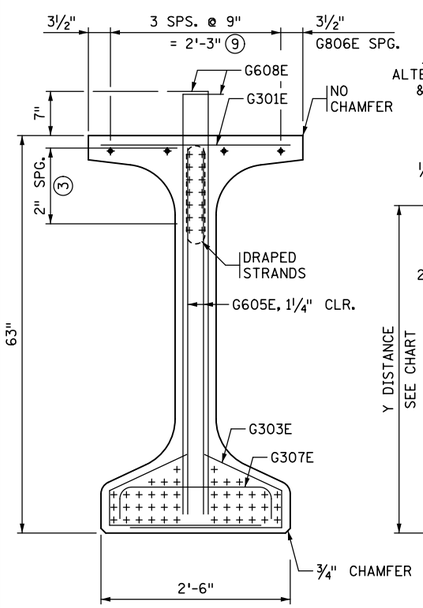

END VIEW

CUT STRANDS FLUSH WITH CONCRETE. COVER ENDS WITH SEALANT PER APPROVED PRODUCTS LIST "BRIDGE-PRESTRESSED BEAMS-CUT STRAND SEALANT."

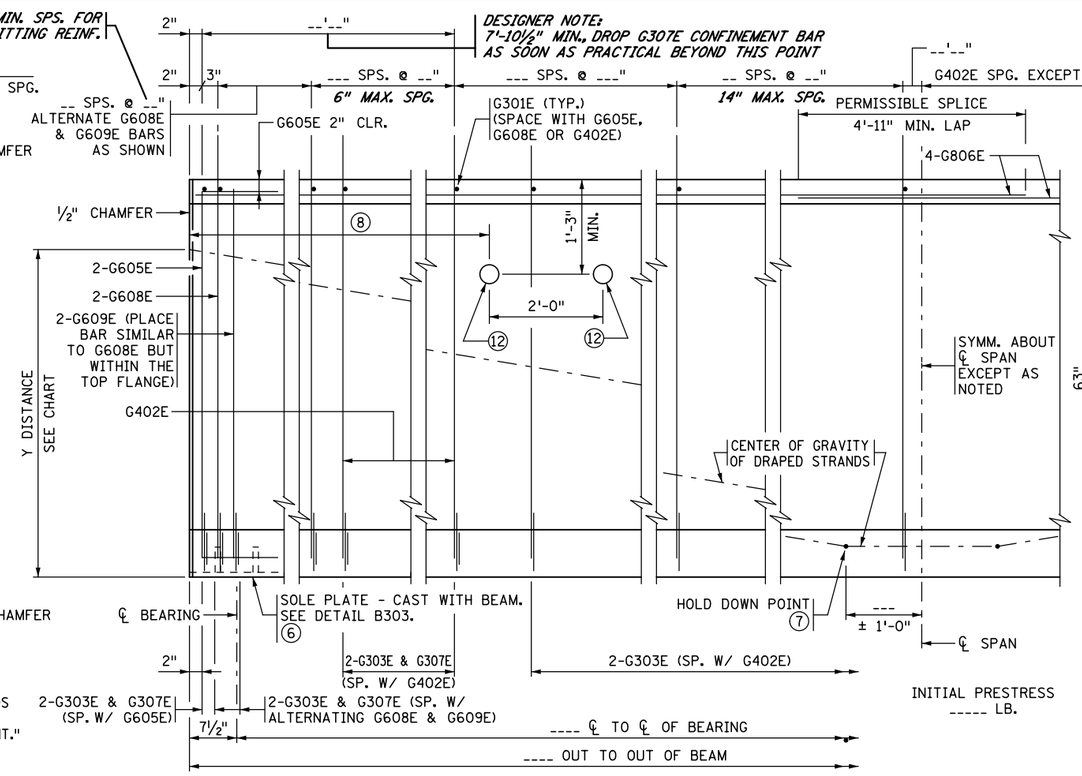

BEAM ELEVATION

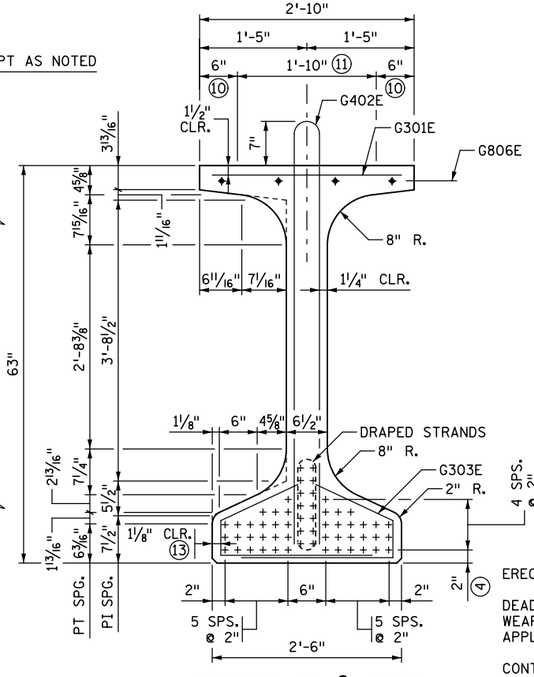

SECTION AT ℄ SPAN

Y DISTANCES (INCHES)			
	NO.	℄ SPAN	END
STRAIGHT STRANDS	---	---	
DRAPED STRANDS	---	---	--- ▫
⑤ TOTAL STRANDS	---	---	

Y = DISTANCE TO CENTER OF GRAVITY OF STRANDS FROM BOTTOM OF BEAM. ALL STRANDS SPACED 2" CENTER TO CENTER, HORIZONTALLY AND VERTICALLY, EXCEPT AS NOTED.

▫ A TOLERANCE OF ± 1" WILL BE PERMITTED IN THIS DIMENSION.

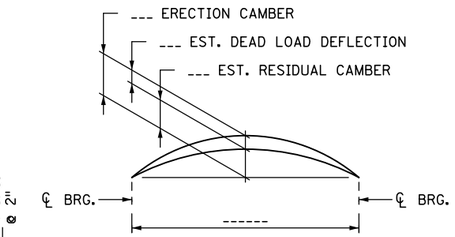

CAMBER DIAGRAM

ERECTION CAMBER SHOWN IS AFTER DIAPHRAGMS ARE IN PLACE.

DEAD LOAD DEFLECTION SHOWN IS FOR WEIGHT OF SLAB, WEARING COURSE, BARRIER, SIDEWALK AND MEDIAN WHERE APPLICABLE.

CONTRACTOR WILL TAKE ELEVATIONS AT TOP OF BEAMS AFTER ERECTION AND WILL ALLOW FOR DEFLECTION SHOWN TO ENABLE BUILDING FORMS TO CORRECT GRADE AND SPECIFIED SLAB THICKNESS. PROVIDE COPY OF ELEVATIONS TO THE ENGINEER.

GENERAL NOTES

PROVIDE HANDLING HOOKS OR DEVICES AS REQUIRED BY CONTRACTOR.

MARK EACH BEAM SHOWING BRIDGE NUMBER, CASTING DATE, AND INDIVIDUAL IDENTIFICATION LETTERS AND NUMBERS ON THE FACE OF THE BEAM, NEAR THE END, SO LOCATED THAT THEY WILL BE EXPOSED AFTER THE END DIAPHRAGMS HAVE BEEN CAST. MARK FASCIA BEAMS ON THE INSIDE FACE. ENSURE ALL MARKINGS ARE STENCILLED AND CLEARLY LEGIBLE. FOR LOCATION OF BEAMS, SEE FRAMING PLAN.

ALL MATERIAL AND WORK SHOWN OR NOTED ON THIS SHEET IS INCLUDED IN UNIT PRICE BID FOR PRESTRESSED CONCRETE BEAMS. SEE SPEC. 2405.

SEE FRAMING PLAN FOR BEAM END MARKED "X" AND DIAPHRAGM SPACING.

AS AN ALTERNATE TO THE END DIAPHRAGM ANCHORAGES SHOWN, THE CONTRACTOR MAY SUBMIT DETAILS OF A CAST-IN-PLACE ANCHORAGE TO THE ENGINEER FOR APPROVAL. ANCHORAGE MUST PROVIDE AN ULTIMATE PULL OUT STRENGTH OF 15 KIPS PER ANCHORAGE.

APPLY AN APPROVED SEALER TO THE SIDES OF THE BEAM NEAR EACH END PER THE SPECIAL PROVISIONS.

① MINIMUM CONCRETE STRENGTH AT TIME OF PRESTRESS TRANSFER.

② MINIMUM CONCRETE STRENGTH WHEN BEAM CAN BE TRANSPORTED AND INSTALLED.

③ DRAPED STRANDS.

④ STRAIGHT STRANDS.

⑤ USE 0.6" DIA. 7-WIRE LOW RELAXATION PRESTRESSING STRAND, CONFORMING TO ASTM A416, GRADE 270.

⑥ FOR INTEGRAL ABUTMENT, SOLE PLATE CAN BE ELIMINATED OR REPLACED WITH AN APPROVED PROTECTION PLATE. BEAMS DETAILED TO INCLUDE A TAPERED PLATE PER STANDARD FIGURE B309 MUST INCLUDE SOLE PLATE.

⑦ CENTER OF GRAVITY OF HOLD DOWNS WHEN MULTIPLE HOLD DOWNS ARE USED.

⑧ DIMENSION DETERMINED BY CONTRACTOR. MAINTAIN 2" MINIMUM CLEAR FROM STRANDS.

⑨ TWO INSIDE BARS MAY BE PLACED ADJACENT TO VERTICAL STIRRUP FOR TYING CONVENIENCE.

⑩ STEEL TROWEL TO SMOOTH FINISH AND APPLY BOND BREAKER PER APPROVED PRODUCTS LIST.

⑪ ROUGH FLOAT AND BROOM TRANSVERSELY FOR BOND PER SPEC. 2405.3.D.

⑫ OPTIONAL: 3" MAX. DIA. SLEEVE FOR HAULING (AFTER INSTALLATION, COAT WITH APPROVED EPOXY BONDING AGENT & FILL WITH APPROVED NON-SHRINK GROUT).

⑬ TYP. CLR. FOR ENTIRE BOTTOM FLANGE.

CALCULATED PRESTRESS LOSSES	
ELASTIC SHORTENING LOSS	--- KSI
LONG TERM LOSSES	--- KSI
TOTAL LOSSES	--- KSI

MINIMUM CONCRETE STRENGTH - K.S.I.	
① f'cI	② f'c
--- KSI	--- KSI

DESIGNER NOTE: INDICATE MIN. REQUIRED CONCRETE STRENGTH. ROUND CONCRETE STRENGTH TO ONE TENTH KSI.

DESIGNER NOTE: MIN. DISTANCE BETWEEN THREADED INSERT AND END OF BEAM IS 3".

TEXT IN ITALICS ARE DESIGNER NOTES. REMOVE PRIOR TO PLOTTING FINAL PLAN.

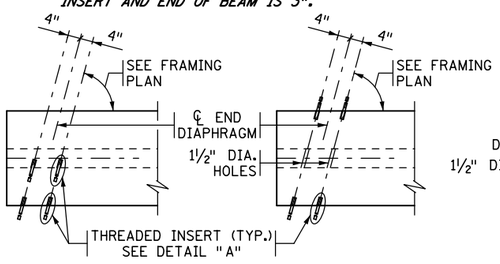

PLAN AT FASCIA BEAMS

PLAN AT INTERIOR BEAMS

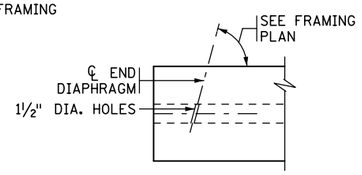

PLAN

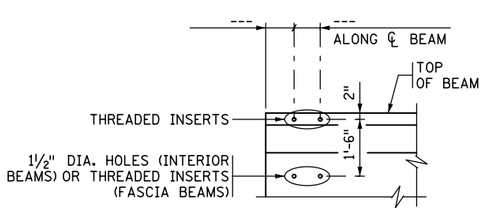

ELEVATION

CONCRETE END DIAPHRAGM

PARAPET ABUTMENT
(SEE DETAIL B814 FOR DIAPHRAGM DETAILS)

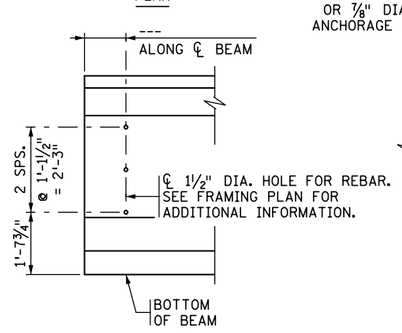

ELEVATION

CONCRETE END DIAPHRAGM

SEE SUPERSTRUCTURE DETAILS AND REINFORCEMENT FOR DIAPHRAGM DETAILS.

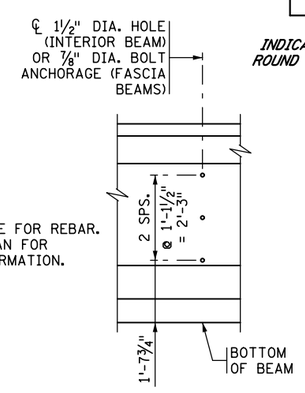

ELEVATION

STEEL INTERMEDIATE DIAPHRAGM

(SEE DETAIL B403 FOR DIAPHRAGM DETAILS)

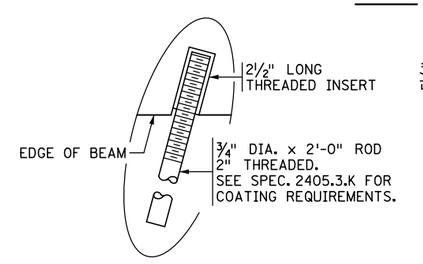

DETAIL "A"

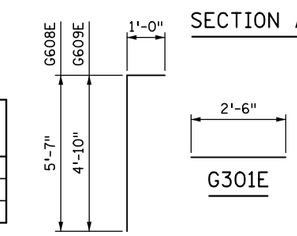

G608E & G609E

G301E

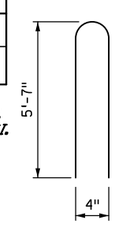

G402E

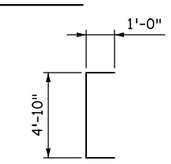

G605E

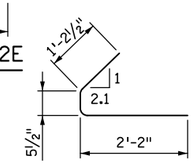

G303E

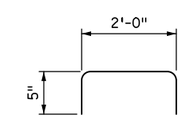

G307E

BEAMS

FIG. 5-397.509

REVISED: DECEMBER 02, 2015

APPROVED: JANUARY 13, 2015

Nancy Daubenberger
STATE BRIDGE ENGINEER

CERTIFIED BY _____ LICENSED PROFESSIONAL ENGINEER _____ DATE

NAME: LIC. NO.

TITLE: MN63" PRESTRESSED CONCRETE BEAM (PRETENSIONED) MN63-

DES:	DR:	APPROVED:	BRIDGE NO.
CHK:	CHK:		
SHEET NO.	OF	SHEETS	

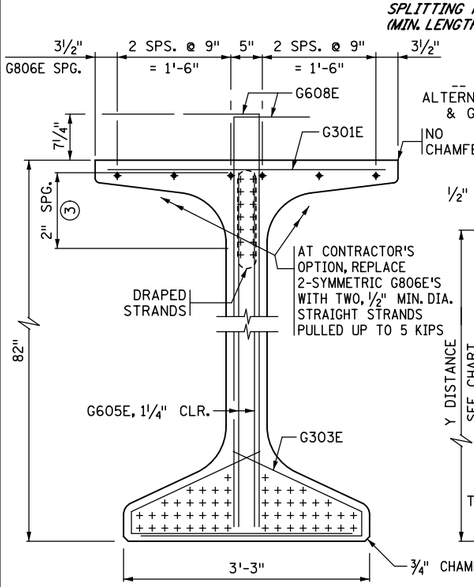

END VIEW

CUT STRANDS FLUSH WITH CONCRETE. COVER ENDS WITH SEALANT PER APPROVED PRODUCTS LIST "BRIDGE-PRESTRESSED BEAMS-CUT STRAND SEALANT."

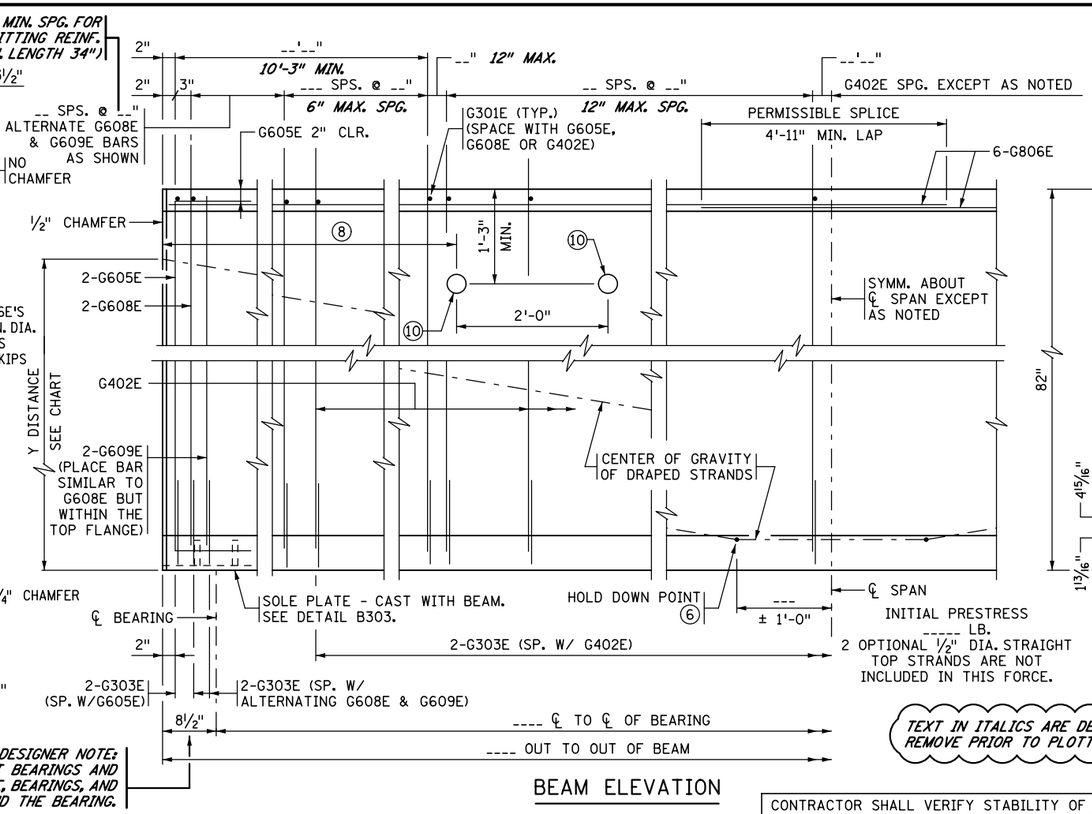

BEAM ELEVATION

DESIGNER NOTE: ADJUST THIS DIMENSION FOR LARGE MOVEMENT BEARINGS AND CONSIDER THE EFFECTS ON THE SOLE PLATE, BEARINGS, AND PORTION OF THE BEAM THAT CANTILEVERS BEYOND THE BEARING.

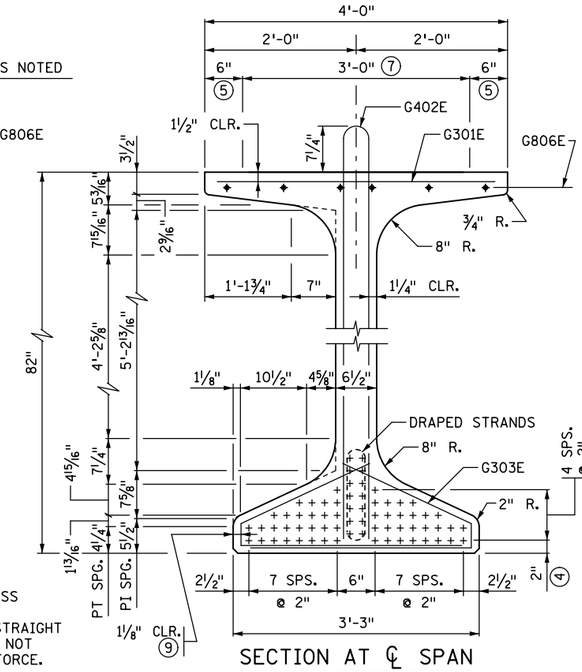

SECTION AT ℄ SPAN

Y DISTANCES (INCHES)			
	NO.	℄ SPAN	END
STRAIGHT STRANDS	---	---	
DRAPED STRANDS	---	---	--- ▫
TOTAL STRANDS	---	---	

Y = DISTANCE TO CENTER OF GRAVITY OF STRANDS FROM BOTTOM OF BEAM. ALL STRANDS SPACED 2" CENTER TO CENTER, HORIZONTALLY AND VERTICALLY, EXCEPT AS NOTED.

2 OPTIONAL ½" DIA. STRAIGHT STRANDS ARE NOT INCLUDED IN THIS TABLE.

▫ A TOLERANCE OF ± 1" WILL BE PERMITTED IN THIS DIMENSION.

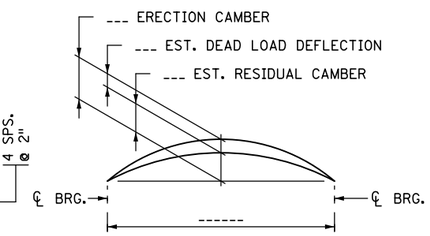

CAMBER DIAGRAM

ERECTION CAMBER SHOWN IS AFTER DIAPHRAGMS ARE IN PLACE.

DEAD LOAD DEFLECTION SHOWN IS FOR WEIGHT OF SLAB, WEARING COURSE, BARRIER, SIDEWALK AND MEDIAN WHERE APPLICABLE.

CONTRACTOR WILL TAKE ELEVATIONS AT TOP OF BEAMS AFTER ERECTION AND WILL ALLOW FOR DEFLECTION SHOWN TO ENABLE BUILDING FORMS TO CORRECT GRADE AND SPECIFIED SLAB THICKNESS. PROVIDE COPY OF ELEVATIONS TO THE ENGINEER.

TEXT IN ITALICS ARE DESIGNER NOTES. REMOVE PRIOR TO PLOTTING FINAL PLAN.

CONTRACTOR SHALL VERIFY STABILITY OF FASCIA BEAMS FROM OVERTURNING DUE TO DECK PLACEMENT OPERATIONS. CONTRACTOR SHALL PROVIDE TEMPORARY BRACING.

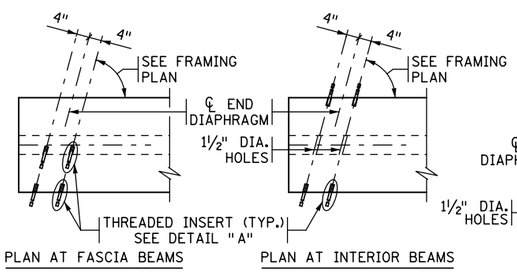

PLAN AT FASCIA BEAMS

PLAN AT INTERIOR BEAMS

DESIGNER NOTE: MIN. DISTANCE BETWEEN THREADED INSERT AND END OF BEAM IS 3".

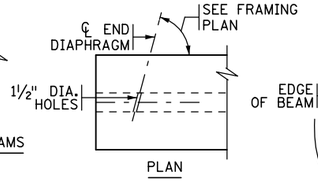

PLAN

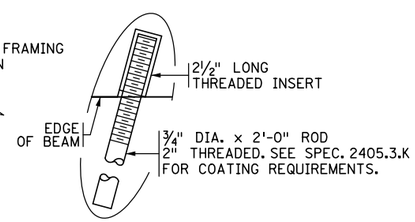

DETAIL "A"

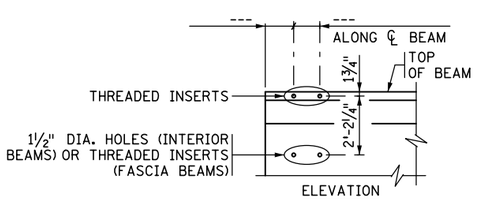

CONCRETE END DIAPHRAGM

PARAPET ABUTMENT
(SEE DETAIL B814 FOR DIAPHRAGM DETAILS)

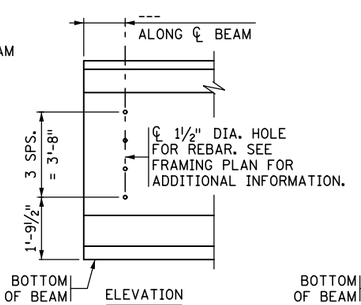

CONCRETE END DIAPHRAGM

SEMI-INTEGRAL ABUTMENT
SEE SUPERSTRUCTURE DETAILS AND REINFORCEMENT FOR DIAPHRAGM DETAILS.

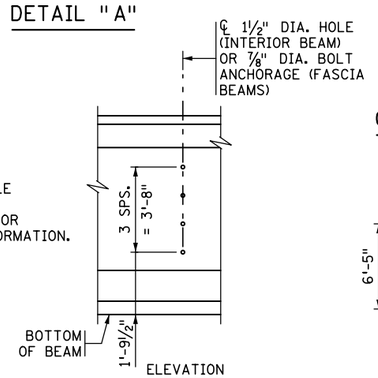

STEEL INTERMEDIATE DIAPHRAGM

(SEE DETAIL B412 FOR DIAPHRAGM DETAILS)

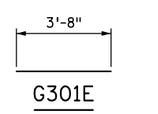

G301E

CALCULATED PRESTRESS LOSSES	
ELASTIC SHORTENING LOSS	--- KSI
LONG TERM LOSSES	--- KSI
TOTAL LOSSES	--- KSI

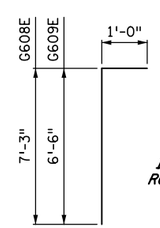

G608E & G609E

MINIMUM CONCRETE STRENGTH - K.S.I.	
① f'cI	② f'c
--- KSI	--- KSI

DESIGNER NOTE: INDICATE MIN. REQUIRED CONCRETE STRENGTH, ROUND CONCRETE STRENGTH TO ONE TENTH KSI.

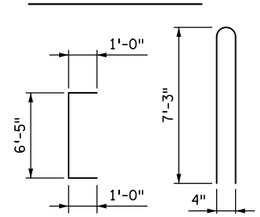

G605E

G402E

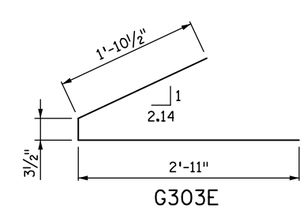

G303E

GENERAL NOTES

PROVIDE HANDLING HOOKS OR DEVICES AS REQUIRED BY CONTRACTOR.

MARK EACH BEAM SHOWING BRIDGE NUMBER, CASTING DATE, AND INDIVIDUAL IDENTIFICATION LETTERS AND NUMBERS ON THE FACE OF THE BEAM, NEAR THE END, SO LOCATED THAT THEY WILL BE EXPOSED AFTER THE END DIAPHRAGMS HAVE BEEN CAST. MARK FASCIA BEAMS ON THE INSIDE FACE. ENSURE ALL MARKINGS ARE STENCILLED AND CLEARLY LEGIBLE. FOR LOCATION OF BEAMS, SEE FRAMING PLAN.

ALL MATERIAL AND WORK SHOWN OR NOTED ON THIS SHEET IS INCLUDED IN UNIT PRICE BID FOR PRESTRESSED CONCRETE BEAMS. SEE SPEC. 2405.

SEE FRAMING PLAN FOR BEAM END MARKED "X" AND DIAPHRAGM SPACING.

AS AN ALTERNATE TO THE END DIAPHRAGM ANCHORAGES SHOWN, THE CONTRACTOR MAY SUBMIT DETAILS OF A CAST-IN-PLACE ANCHORAGE TO THE ENGINEER FOR APPROVAL. ANCHORAGE MUST PROVIDE AN ULTIMATE PULL OUT STRENGTH OF 24 KIPS PER ANCHORAGE.

USE 0.6" DIA. 7-WIRE LOW RELAXATION PRESTRESSING STRAND, CONFORMING TO ASTM A416, GRADE 270.

APPLY AN APPROVED SEALER TO THE SIDES OF THE BEAM NEAR EACH END PER THE SPECIAL PROVISIONS.

① MINIMUM CONCRETE STRENGTH AT TIME OF PRESTRESS TRANSFER.

② MINIMUM CONCRETE STRENGTH WHEN BEAM CAN BE TRANSPORTED AND INSTALLED.

③ DRAPED STRANDS.

④ STRAIGHT STRANDS.

⑤ STEEL TROWEL TO SMOOTH FINISH AND APPLY BOND BREAKER PER APPROVED PRODUCTS LIST.

⑥ CENTER OF GRAVITY OF HOLD DOWNS WHEN MULTIPLE HOLD DOWNS ARE USED.

⑦ ROUGH FLOAT AND BROOM TRANSVERSELY FOR BOND PER SPEC. 2405.3D.

⑧ DIMENSION DETERMINED BY CONTRACTOR. MAINTAIN 2" MINIMUM CLEAR FROM STRANDS.

⑨ TYP. CLR. FOR ENTIRE BOTTOM FLANGE.

⑩ OPTIONAL: 3" MAX. DIA. SLEEVE FOR HAULING (AFTER INSTALLATION, COAT WITH APPROVED EPOXY BONDING AGENT & FILL WITH APPROVED NON-SHRINK GROUT).

REVISED: DECEMBER 02, 2015

APPROVED: JANUARY 13, 2015

Nancy Daubenberger
STATE BRIDGE ENGINEER

CERTIFIED BY _____ LICENSED PROFESSIONAL ENGINEER _____ DATE

NAME: LIC. NO.

TITLE: 82MW PRESTRESSED CONCRETE BEAM (PRETENSIONED) 82MW-

BEAMS

DES: DR: CHK: CHK:

SHEET NO. OF SHEETS

APPROVED:

FIG. 5-397.531

BRIDGE NO.

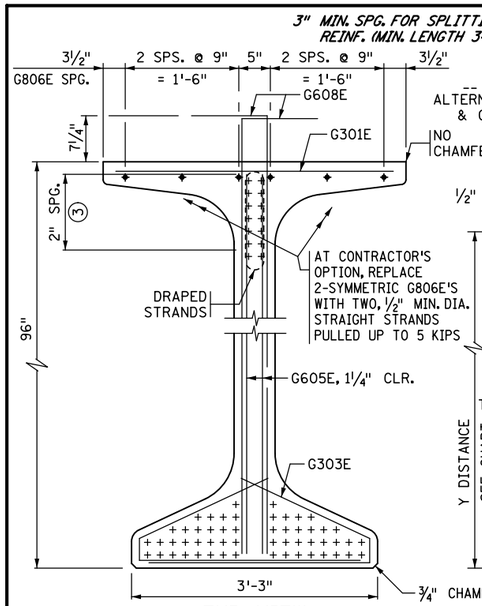

END VIEW

CUT STRANDS FLUSH WITH CONCRETE. COVER ENDS WITH SEALANT PER APPROVED PRODUCTS LIST "BRIDGE-PRESTRESSED BEAMS-CUT STRAND SEALANT."

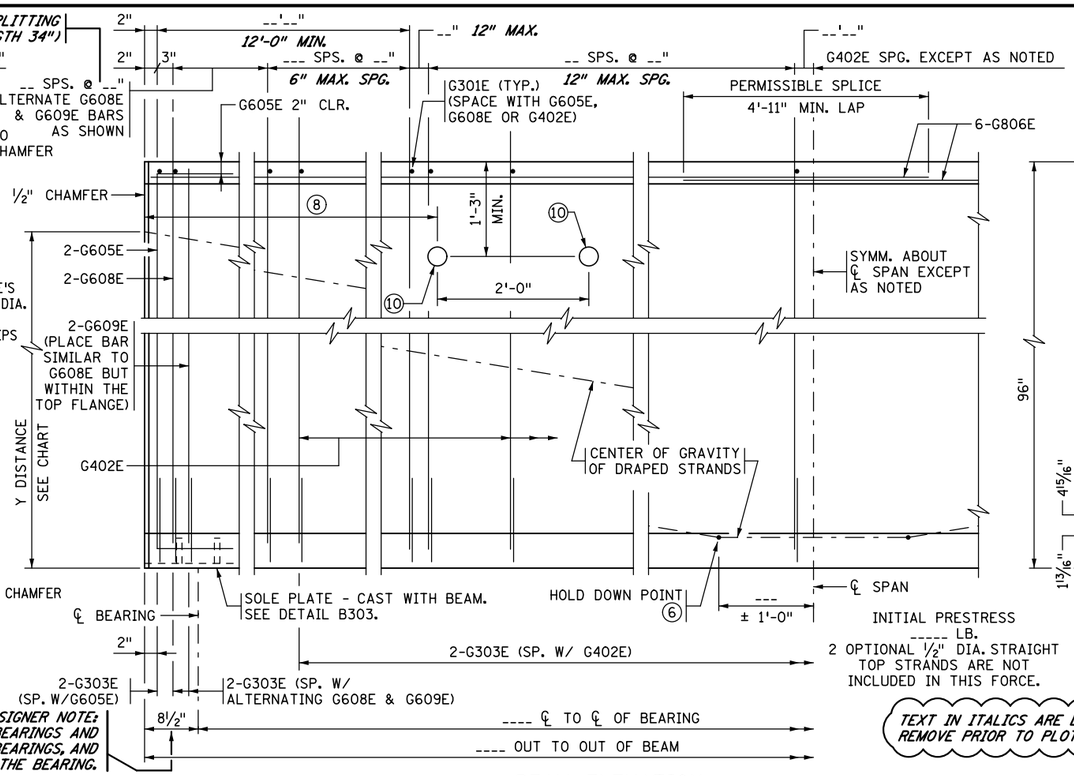

BEAM ELEVATION

DESIGNER NOTE:
ADJUST THIS DIMENSION FOR LARGE MOVEMENT BEARINGS AND CONSIDER THE EFFECTS ON THE SOLE PLATE, BEARINGS, AND PORTION OF THE BEAM THAT CANTILEVERS BEYOND THE BEARING.

INITIAL PRESTRESS
----- LB.
2 OPTIONAL ½" DIA. STRAIGHT TOP STRANDS ARE NOT INCLUDED IN THIS FORCE.

TEXT IN ITALICS ARE DESIGNER NOTES. REMOVE PRIOR TO PLOTTING FINAL PLAN.

CONTRACTOR SHALL VERIFY STABILITY OF FASCIA BEAMS FROM OVERTURNING DUE TO DECK PLACEMENT OPERATIONS. CONTRACTOR SHALL PROVIDE TEMPORARY BRACING.

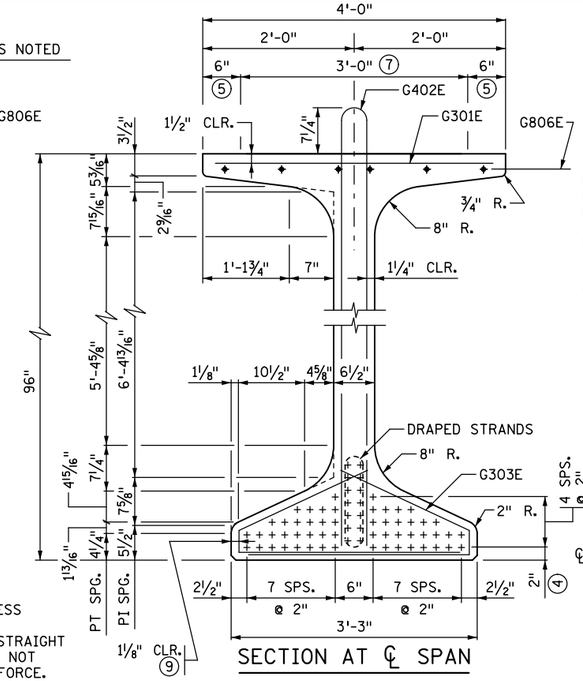

SECTION AT ℄ SPAN

Y DISTANCES (INCHES)			
	NO.	℄ SPAN	END
STRAIGHT STRANDS	---	---	
DRAPED STRANDS	---	---	--- ▫
TOTAL STRANDS	---	---	

Y = DISTANCE TO CENTER OF GRAVITY OF STRANDS FROM BOTTOM OF BEAM. ALL STRANDS SPACED 2" CENTER TO CENTER, HORIZONTALLY AND VERTICALLY, EXCEPT AS NOTED.

2 OPTIONAL ½" DIA. STRAIGHT STRANDS ARE NOT INCLUDED IN THIS TABLE.

▫ A TOLERANCE OF ± 1" WILL BE PERMITTED IN THIS DIMENSION.

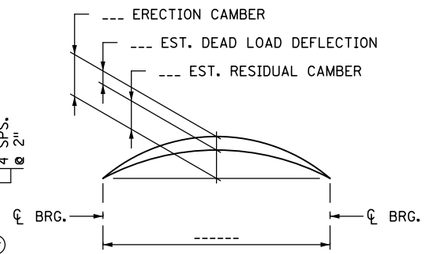

CAMBER DIAGRAM

ERECTION CAMBER SHOWN IS AFTER DIAPHRAGMS ARE IN PLACE.

DEAD LOAD DEFLECTION SHOWN IS FOR WEIGHT OF SLAB, WEARING COURSE, BARRIER, SIDEWALK AND MEDIAN WHERE APPLICABLE.

CONTRACTOR WILL TAKE ELEVATIONS AT TOP OF BEAMS AFTER ERECTION AND WILL ALLOW FOR DEFLECTION SHOWN TO ENABLE BUILDING FORMS TO CORRECT GRADE AND SPECIFIED SLAB THICKNESS. PROVIDE COPY OF ELEVATIONS TO THE ENGINEER.

DESIGNER NOTE:
MIN. DISTANCE BETWEEN THREADED INSERT AND END OF BEAM IS 3".

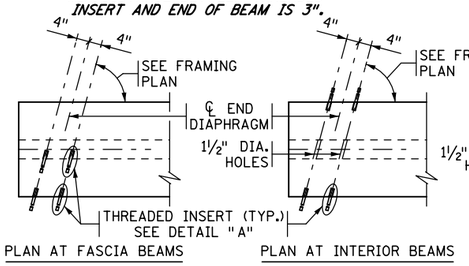

PLAN AT FASCIA BEAMS

PLAN AT INTERIOR BEAMS

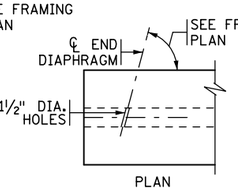

PLAN

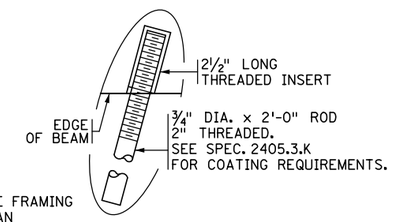

DETAIL "A"

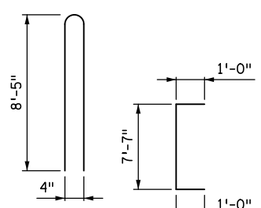

G402E

G605E

CALCULATED PRESTRESS LOSSES	
ELASTIC SHORTENING LOSS	--- KSI
LONG TERM LOSSES	--- KSI
TOTAL LOSSES	--- KSI

MINIMUM CONCRETE STRENGTH - K.S.I.	
① f'cI	② f'c
--- KSI	--- KSI

DESIGNER NOTE:
INDICATE MIN. REQUIRED CONCRETE STRENGTH, ROUND CONCRETE STRENGTH TO ONE TENTH KSI.

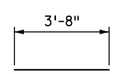

G301E

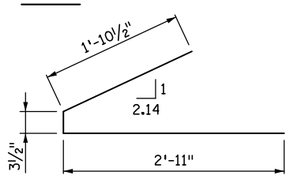

G303E

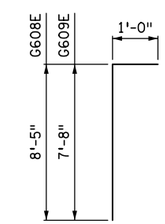

G608E & G609E

GENERAL NOTES

PROVIDE HANDLING HOOKS OR DEVICES AS REQUIRED BY CONTRACTOR.

MARK EACH BEAM SHOWING BRIDGE NUMBER, CASTING DATE, AND INDIVIDUAL IDENTIFICATION LETTERS AND NUMBERS ON THE FACE OF THE BEAM, NEAR THE END, SO LOCATED THAT THEY WILL BE EXPOSED AFTER THE END DIAPHRAGMS HAVE BEEN CAST. MARK FASCIA BEAMS ON THE INSIDE FACE. INSURE ALL MARKINGS ARE STENCILLED AND CLEARLY LEGIBLE. FOR LOCATION OF BEAMS, SEE FRAMING PLAN.

ALL MATERIAL AND WORK SHOWN OR NOTED ON THIS SHEET IS INCLUDED IN UNIT PRICE BID FOR PRESTRESSED CONCRETE BEAMS. SEE SPEC. 2405.

SEE FRAMING PLAN FOR BEAM END MARKED "X" AND DIAPHRAGM SPACING.

AS AN ALTERNATE TO THE DIAPHRAGM ANCHORAGES SHOWN, THE CONTRACTOR MAY SUBMIT DETAILS OF A CAST-IN-PLACE ANCHORAGE TO THE ENGINEER FOR APPROVAL. ANCHORAGE MUST PROVIDE AN ULTIMATE PULL OUT STRENGTH OF 24 KIPS PER ANCHORAGE.

USE 0.6" DIA. 7-WIRE LOW RELAXATION PRESTRESSING STRAND, CONFORMING TO ASTM A416, GRADE 270.

APPLY AN APPROVED SEALER TO THE SIDES OF THE BEAM NEAR EACH END PER THE SPECIAL PROVISIONS.

① MINIMUM CONCRETE STRENGTH AT TIME OF PRESTRESS TRANSFER.

② MINIMUM CONCRETE STRENGTH WHEN BEAM CAN BE TRANSPORTED AND INSTALLED.

③ DRAPED STRANDS.

④ STRAIGHT STRANDS.

⑤ STEEL TROWEL TO SMOOTH FINISH AND APPLY BOND BREAKER PER APPROVED PRODUCTS LIST.

⑥ CENTER OF GRAVITY OF HOLD DOWNS WHEN MULTIPLE HOLD DOWNS ARE USED.

⑦ ROUGH FLOAT AND BROOM TRANSVERSELY FOR BOND PER SPEC. 2405.3D.

⑧ DIMENSIONS DETERMINED BY CONTRACTOR. MAINTAIN 2" MINIMUM CLEAR FROM STRANDS.

⑨ TYP. CLR. FOR ENTIRE BOTTOM FLANGE.

⑩ OPTIONAL: 3" MAX. DIA. SLEEVE FOR HAULING (AFTER INSTALLATION, COAT WITH APPROVED EPOXY BONDING AGENT & FILL WITH APPROVED NON-SHRINK GROUT).

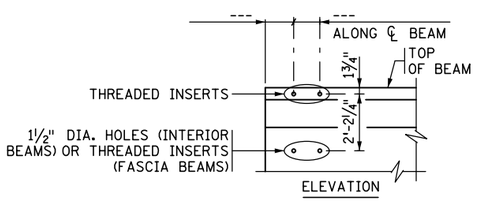

CONCRETE END DIAPHRAGM

PARAPET ABUTMENT
(SEE DETAIL B814 FOR DIAPHRAGM DETAILS)

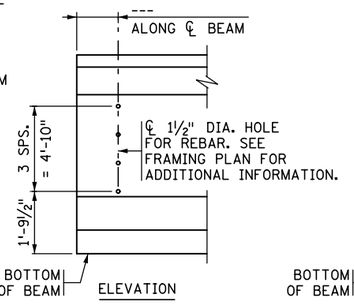

CONCRETE END DIAPHRAGM

SEMI-INTEGRAL ABUTMENT
SEE SUPERSTRUCTURE DETAILS AND REINFORCEMENT FOR DIAPHRAGM DETAILS.

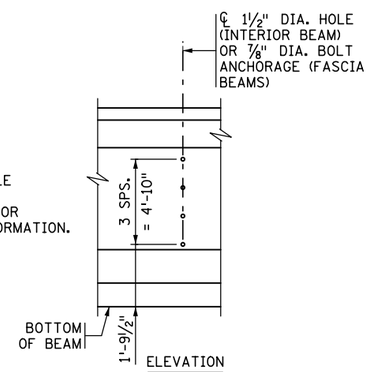

STEEL INTERMEDIATE DIAPHRAGM

(SEE DETAIL B412 FOR DIAPHRAGM DETAILS)

REVISED: DECEMBER 02, 2015

APPROVED: JANUARY 13, 2015

Nancy Daubenberger
STATE BRIDGE ENGINEER

CERTIFIED BY _____ LICENSED PROFESSIONAL ENGINEER _____ DATE

NAME: LIC. NO.

TITLE: 96MW PRESTRESSED CONCRETE BEAM (PRETENSIONED) 96MW-

BEAMS

FIG. 5-397.532

DES: DR: CHK: CHK:

APPROVED:

BRIDGE NO.

SHEET NO. OF SHEETS

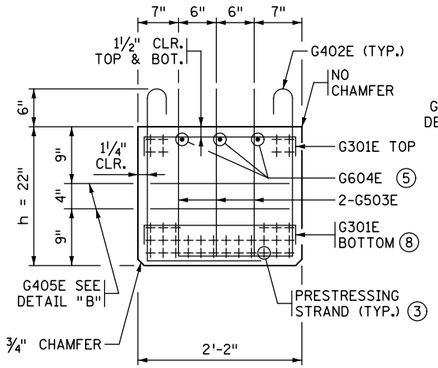

END VIEW - 22" RB

CUT STRANDS FLUSH WITH CONCRETE.
COVER ENDS WITH ONE COMPONENT POLYURETHANE SEALANT PER APPROVED PRODUCT LIST.

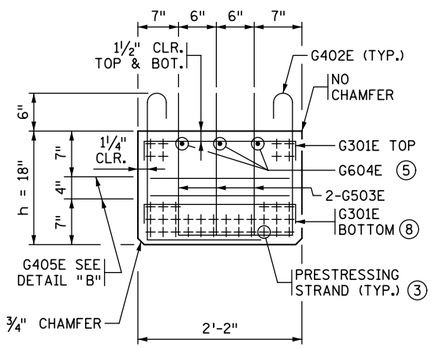

END VIEW - 18" RB

CUT STRANDS FLUSH WITH CONCRETE.
COVER ENDS WITH ONE COMPONENT POLYURETHANE SEALANT PER APPROVED PRODUCT LIST.

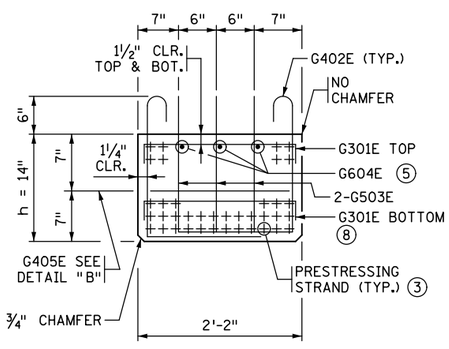

END VIEW - 14" RB

CUT STRANDS FLUSH WITH CONCRETE.
COVER ENDS WITH ONE COMPONENT POLYURETHANE SEALANT PER APPROVED PRODUCT LIST.

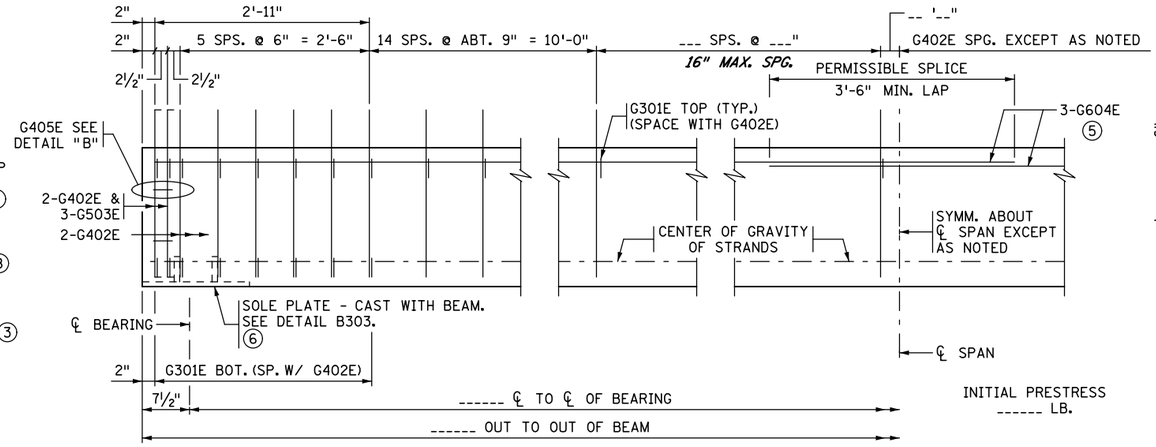

BEAM ELEVATION

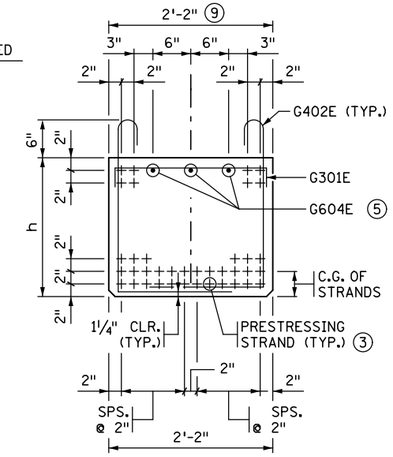

SECTION AT ℄ SPAN

STRAND ARRANGEMENT	
LOCATION	NO. OF STRANDS
TOP ROW	----
2ND ROW FROM TOP	----
3RD ROW FROM BOTTOM	----
2ND ROW FROM BOTTOM	----
BOTTOM ROW	----
TOTAL	----
C.G. OF STRANDS = ---- INCHES	

C.G. = DISTANCE TO CENTER OF GRAVITY OF ALL STRANDS FROM BOTTOM OF BEAM. ALL STRANDS SPACED 2" CENTER TO CENTER, HORIZONTALLY AND VERTICALLY, EXCEPT AS NOTED.

ALL STRAIGHT STRAND.

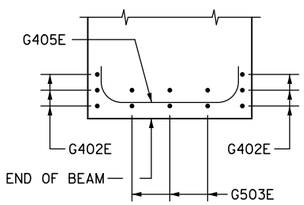

DETAIL "B"

PLAN VIEW SHOWING PLACEMENT OF G405E BAR

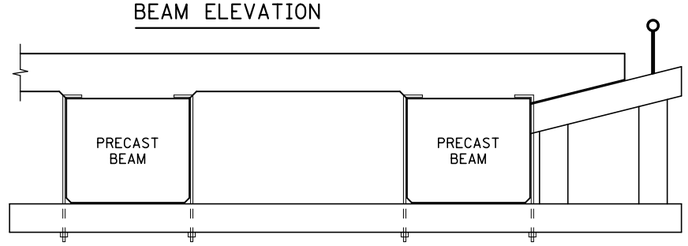

OVERHANG SUPPORT CONCEPT SKETCH

SEE THE "CONSTRUCTION NOTES" ON FRONT PORTION OF THE BRIDGE PLANS.
THIS CONCEPT HAS BEEN USED SUCCESSFULLY ON PREVIOUS PROJECTS.
CONTRACTORS MAY CONSIDER THIS OR ANOTHER SYSTEM AT THEIR DISCRETION.

TEXT IN ITALICS ARE DESIGNER NOTES. REMOVE PRIOR TO PLOTTING FINAL PLAN.

DESIGNER NOTE: ADD STANDARD TEMPORARY BRACING NOTE FOR RECTANGULAR PCB TO THE "CONSTRUCTION NOTES" ON THE FRONT PORTION OF THE PLANS.

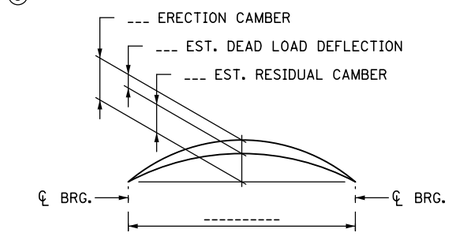

CAMBER DIAGRAM

DEAD LOAD DEFLECTION SHOWN IS FOR WEIGHT OF SLAB, WEARING COURSE, BARRIER, SIDEWALK AND MEDIAN WHERE APPLICABLE.

CONTRACTOR WILL TAKE ELEVATIONS AT TOP OF BEAMS AFTER ERECTION AND WILL ALLOW FOR DEFLECTION SHOWN TO ENABLE BUILDING FORMS TO CORRECT GRADE AND SPECIFIED SLAB THICKNESS. PROVIDE COPY OF ELEVATIONS TO THE ENGINEER.

GENERAL NOTES

PROVIDE HANDLING HOOKS OR DEVICES AS REQUIRED BY CONTRACTOR.

MARK EACH BEAM SHOWING BRIDGE NUMBER, CASTING DATE, AND INDIVIDUAL IDENTIFICATION LETTERS AND NUMBERS ON THE FACE OF THE BEAM, NEAR THE END, SO LOCATED THAT THEY WILL BE EXPOSED AFTER THE END DIAPHRAGMS HAVE BEEN CAST. MARK FASCIA BEAMS ON THE INSIDE FACE. ENSURE ALL MARKINGS ARE STENCILLED AND CLEARLY LEGIBLE. FOR LOCATION OF BEAMS, SEE FRAMING PLAN.

ALL MATERIAL AND WORK SHOWN OR NOTED ON THIS SHEET IS INCLUDED IN UNIT PRICE BID FOR PRESTRESSED CONCRETE BEAMS. SEE SPEC. 2405.

SEE FRAMING PLAN FOR BEAM END MARKED "X".

APPROXIMATE WEIGHT OF BEAM IS ---- TONS.

AS AN ALTERNATE TO THE END DIAPHRAGM ANCHORAGES SHOWN, THE CONTRACTOR MAY SUBMIT DETAILS OF A CAST-IN-PLACE ANCHORAGE TO THE ENGINEER FOR APPROVAL. ANCHORAGE MUST PROVIDE AN ULTIMATE PULL OUT STRENGTH OF 15 KIPS PER ANCHORAGE.

① MINIMUM CONCRETE STRENGTH AT TIME OF PRESTRESS TRANSFER.

② MINIMUM CONCRETE STRENGTH WHEN BEAM CAN BE TRANSPORTED AND INSTALLED.

③ USE 7-WIRE LOW RELAXATION PRESTRESSING STRAND, CONFORMING TO ASTM A416, GRADE 270.

④ MAY STAGGER BARS TO AVOID INTERFERENCE.

⑤ PROVIDE 2" CLEARANCE AT ENDS OF BEAM.

⑥ FOR INTEGRAL ABUTMENT, SOLE PLATE CAN BE ELIMINATED OR REPLACED WITH AN APPROVED PROTECTION PLATE. BEAMS DETAILED TO INCLUDE A TAPERED PLATE PER STANDARD FIGURE B309 MUST INCLUDE SOLE PLATE.

⑦ FOR INSERTS IN THE OUTSIDE OF FASCIA BEAM, ADJUST THE ROD LENGTH ACCORDING TO THE OVERHANG DIMENSION.

⑧ PLACE G301E BAR ON TOP OF THE TOP ROW OF PRESTRESSING STRANDS IN THE BOTTOM OF THE BEAM.

⑨ ROUGH FLOAT AND BROOM TRANSVERSELY FOR BOND PER SPEC. 2405.3.D.

CONTRACTOR SHALL VERIFY STABILITY OF FASCIA BEAMS FROM OVERTURNING (NO PERMANENT BEAM DIAPHRAGMS ARE PRESENT). CONTRACTOR SHALL PROVIDE TEMPORARY BRACING.

DESIGNER NOTE:
FOR BRIDGES WITH SEMI-INTEGRAL OR PARAPET ABUTMENTS, DESIGN THE CONCRETE END DIAPHRAGM TO ACCOMMODATE THE SHALLOW BEAM DEPTH, AS NO STANDARD END DIAPHRAGM DETAILS EXIST.

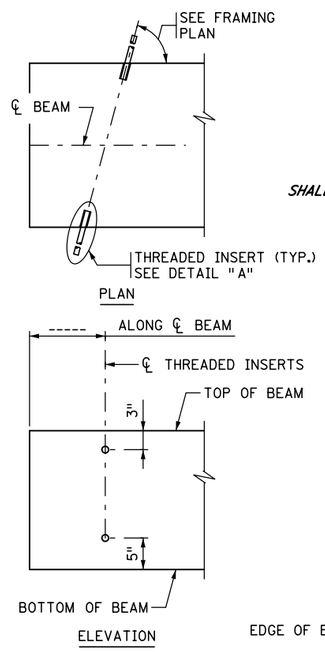

CONCRETE END DIAPHRAGM ANCHORAGES

INTEGRAL ABUTMENT
(SEE DETAIL B816 FOR CONCRETE END DIAPHRAGM DETAILS)

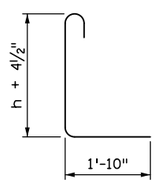

G402E

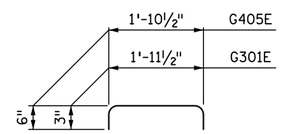

G301E, G405E

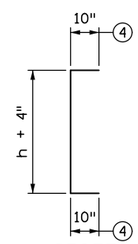

G503E

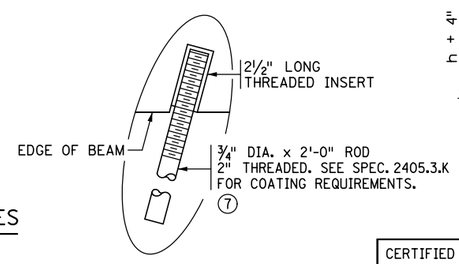

DETAIL "A"

SECTION HEIGHT "h"		
14" ☐	18" ☐	22" ☐

AN "X" IN THE BOX INDICATES THE SECTION HEIGHT.

CALCULATED PRESTRESS LOSSES	
ELASTIC SHORTENING LOSS	--- KSI
LONG TERM LOSSES	--- KSI
TOTAL LOSSES	--- KSI

MINIMUM CONCRETE STRENGTH - K.S.I.	
① f'cI	② f'c
----- KSI	----- KSI

PRESTRESSING STRAND DIAMETER	
③	½" ☐
③	0.60" ☐

DESIGNER NOTE: PLACE AN "X" IN THE APPROPRIATE BOX TO INDICATE THE STRAND DIAMETER USED FOR THE DESIGN. ROUND CONCRETE STRENGTH TO ONE TENTH KSI.

REVISED:

APPROVED: JANUARY 13, 2015
Nancy Daubenberger
STATE BRIDGE ENGINEER

CERTIFIED BY _____ LICENSED PROFESSIONAL ENGINEER _____ DATE
NAME: LIC. NO.

TITLE: 14", 18" & 22" RECTANGULAR PRESTRESSED CONCRETE BEAM (PRETENSIONED) RB-

DES: DR: CHK: CHK: APPROVED:

SHEET NO. OF SHEETS

BEAMS -----

FIG. 5-397.550

BRIDGE NO.

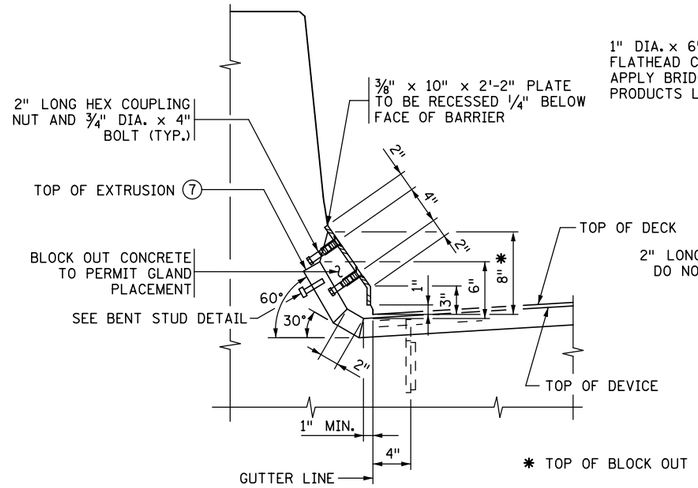

SECTION THROUGH BARRIER

TYPE F BARRIER

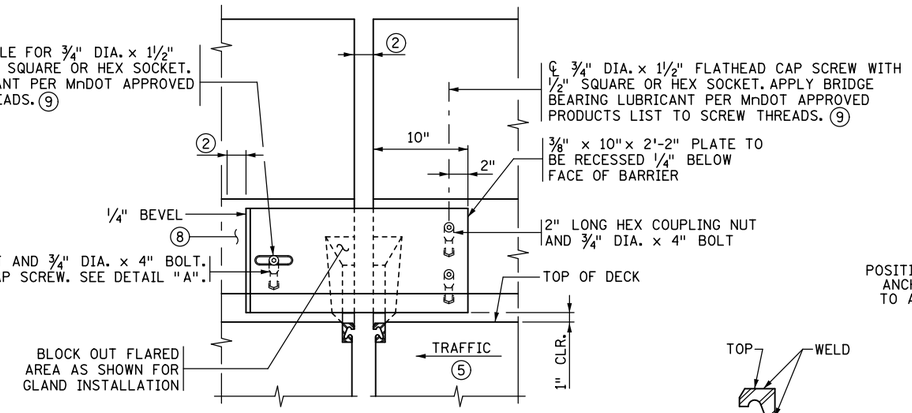

BARRIER ELEVATION

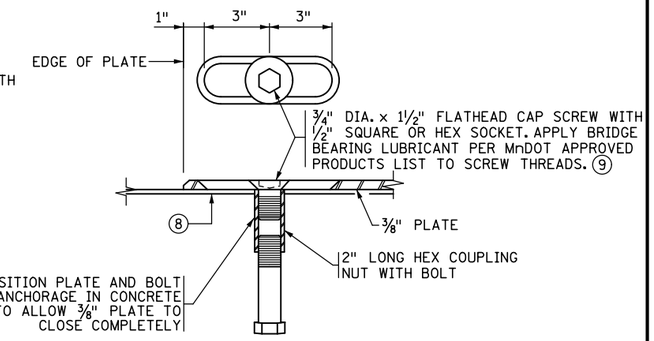

DETAIL "A"

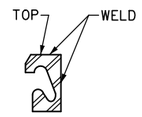

SECTION C-C

GENERAL NOTES

GALVANIZE STRUCTURAL STEEL AFTER FABRICATION PER SPEC. 3394. GALVANIZE FASTENERS PER SPEC. 3392.

LOCATE JOINTS IN EXTRUSION AT BREAKS IN TRANSVERSE PROFILE AND AS OTHERWISE REQUIRED, WITH CLOSE FIT, WELDED JOINTS. REPAIR AFTER WELDING PER SPEC. 2471.3.L.

PROVIDE STRUCTURAL STEEL PER SPEC. 3306 OR SPEC. 3309.

STRAIGHTEN EXPANSION DEVICE TO A TOLERANCE OF ⅛" IN 10 FT.

¾" DIA. X 1½" FLATHEAD CAP SCREW WITH ½" SQUARE OR HEX SOCKET PER SPEC 3391. COUNTERSINK CAP SCREWS 1/16" BELOW TOP OF PLATE. APPLY BRIDGE BEARING LUBRICANT PER MnDOT APPROVED PRODUCTS LIST TO SCREW THREADS. ⑨

PAYMENT LENGTH IS BASED ON THE HORIZONTAL DISTANCE BETWEEN THE OUTSIDE EDGES OF THE DECK MEASURED ALONG THE CENTERLINE OF JOINT.

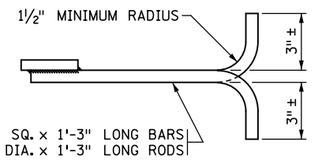

BAR-ROD DETAIL

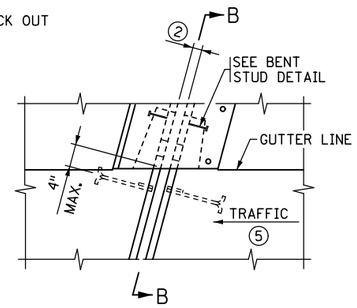

PLAN VIEW @ EXPANSION DEVICE

MEDIAN OR SIDEWALK ALTERNATE

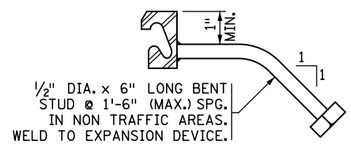

BENT STUD DETAIL

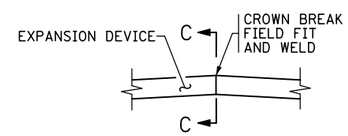

DETAIL "B"

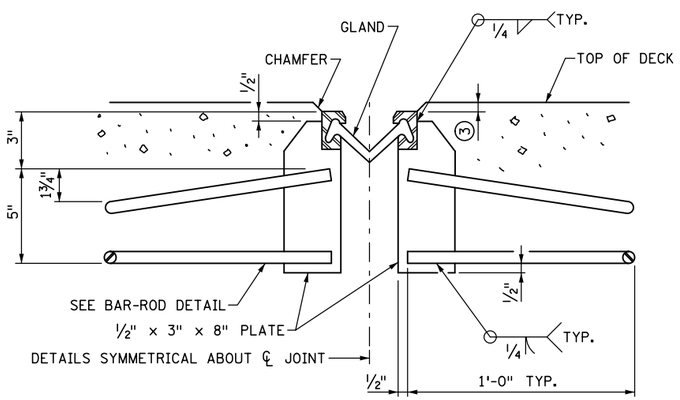

SECTION A-A

DESIGNER NOTE: CHOOSE ONE JOINT OPENING NOTE AND DELETE OTHER.

① DIMENSIONS ARE ALONG CENTERLINE OF JOINT.

② __AT 45° F; __ AT 90° F. 2" AT ALL TEMPS.

③ ⅛" (¼" MAX.). ½" (⅝" MAX.) WHEN SNOWPLOW FINGERS ARE USED. SNOWPLOW FINGERS ARE REQUIRED FOR SKEWS OVER 15° AND LESS THAN 50°.

④ SEE SUPERSTRUCTURE DETAILS FOR RADIUS.

⑤ SEE SHEET NO. __ FOR DIRECTION OF TRAFFIC.

⑥ PLACE BAR-ROD NORMAL TO JOINT ON NEW BRIDGES AND JOINT REPLACEMENTS. ON JOINT REPLACEMENTS WHEN SKEW IS OVER 15° AND LESS THAN 50° BEND RODS PARALLEL TO ℄ ROADWAY.

⑦ EXTEND GLAND 1" MIN. BEYOND THE TOP OF THE EXTRUSION.

⑧ PROVIDE SMOOTH CONCRETE FINISH BENEATH PLATE WITH 0" MIN. TO ⅛" MAX. GAP BETWEEN CONCRETE AND UNDERSIDE OF PLATE. PROVIDE BOND BREAKER (DUCT TAPE, ETC.) TO UNDERSIDE OF COVER PLATE.

⑨ LUBRICANT PER MnDOT APPROVED/QUALIFIED PRODUCTS LIST: BRIDGE GREASE.

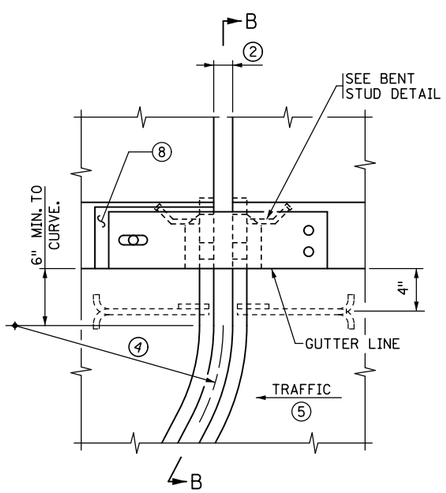

PLAN VIEW @ EXPANSION DEVICE

WITH CURVED DEVICE ALTERNATE

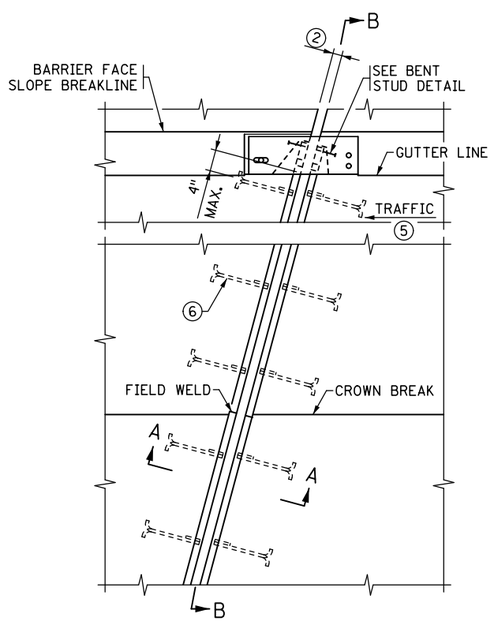

PLAN VIEW @ EXPANSION DEVICE

WITH STRAIGHT DEVICE

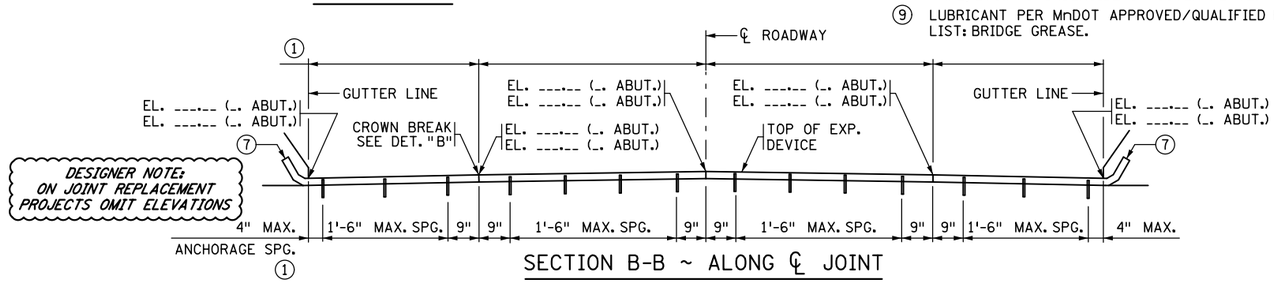

SECTION B-B ~ ALONG ℄ JOINT

ELEVATIONS SHOWN ARE ⅛" BELOW TOP OF SLAB @ ℄ JOINT
ELEVATIONS SHOWN ARE ½" BELOW TOP OF SLAB @ ℄ JOINT

REVISION: 01-05-2017

APPROVED: AUGUST 24, 2016
Kevin Western
STATE BRIDGE ENGINEER

CERTIFIED BY _____ LICENSED PROFESSIONAL ENGINEER _____ DATE
NAME: LIC. NO.

TITLE: WATERPROOF EXPANSION DEVICE (WITH TYPE F BARRIER)

DES:	DR:	APPROVED:
CHK:	CHK:	
SHEET NO. OF SHEETS		

FIG. 5-397.627(A)

BRIDGE NO.

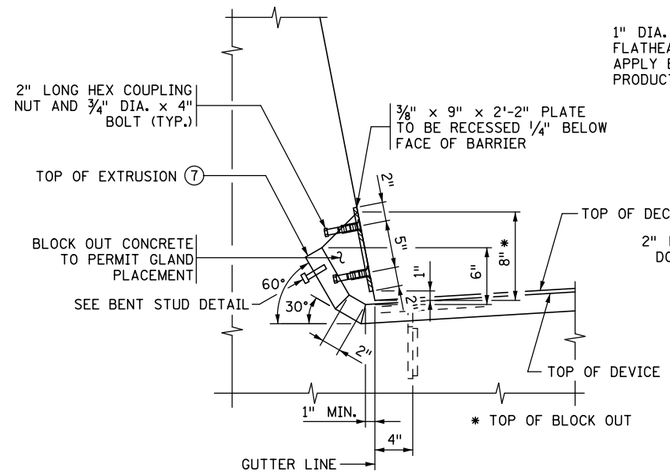

SECTION THROUGH BARRIER

TYPE S BARRIER

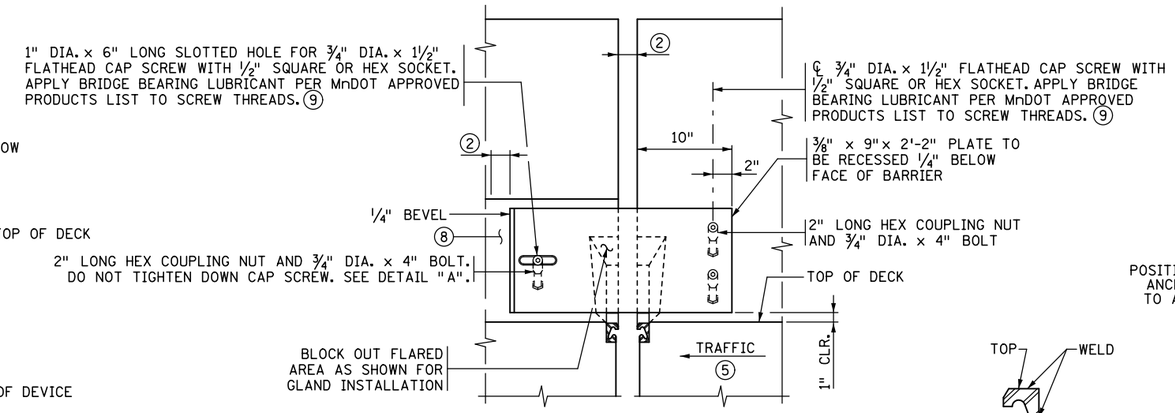

BARRIER ELEVATION

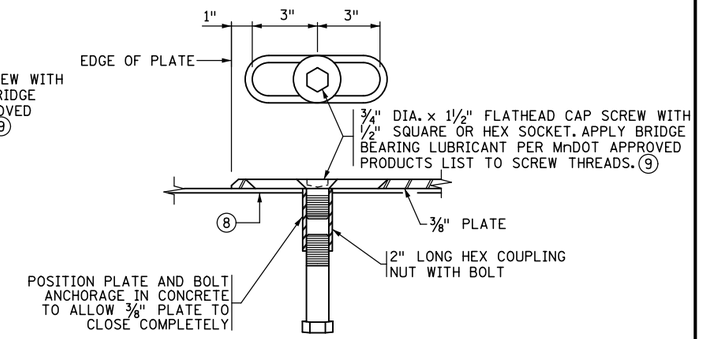

DETAIL "A"

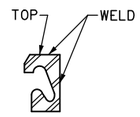

SECTION C-C

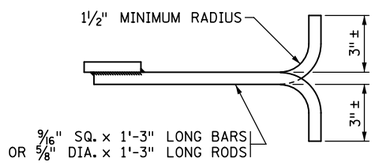

BAR-ROD DETAIL

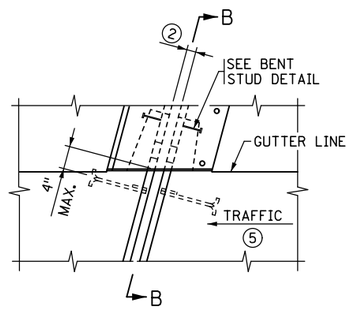

PLAN VIEW @ EXPANSION DEVICE

MEDIAN OR SIDEWALK ALTERNATE

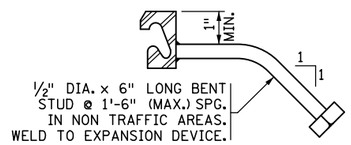

BENT STUD DETAIL

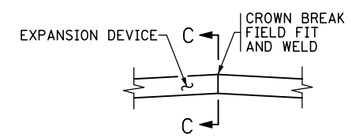

DETAIL "B"

GENERAL NOTES

GALVANIZE STRUCTURAL STEEL AFTER FABRICATION PER SPEC. 3394. GALVANIZE FASTENERS PER SPEC. 3392.

LOCATE JOINTS IN EXTRUSION AT BREAKS IN TRANSVERSE PROFILE AND AS OTHERWISE REQUIRED, WITH CLOSE FIT, WELDED JOINTS. REPAIR AFTER WELDING PER SPEC. 2471.3.L.

PROVIDE STRUCTURAL STEEL PER SPEC. 3306 OR SPEC. 3309.

STRAIGHTEN EXPANSION DEVICE TO A TOLERANCE OF ⅛" IN 10 FT.

¾" DIA. X 1½" FLATHEAD CAP SCREW WITH ½" SQUARE OR HEX SOCKET PER SPEC 3391. COUNTERSINK CAP SCREWS 1/16" BELOW TOP OF PLATE. APPLY BRIDGE BEARING LUBRICANT PER MnDOT APPROVED PRODUCTS LIST TO SCREW THREADS. ⑨

PAYMENT LENGTH IS BASED ON THE HORIZONTAL DISTANCE BETWEEN THE OUTSIDE EDGES OF THE DECK MEASURED ALONG THE CENTERLINE OF JOINT.

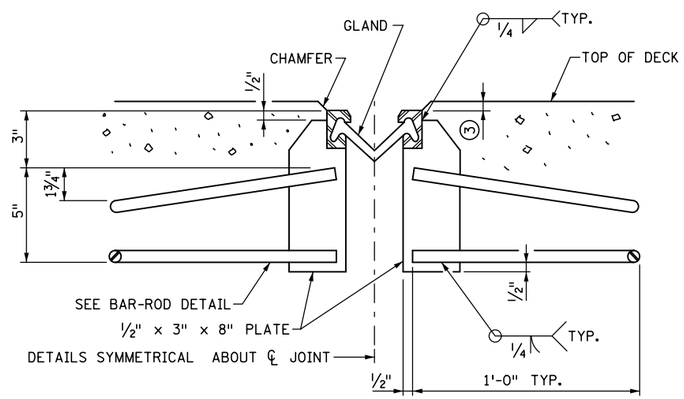

SECTION A-A

DESIGNER NOTE: CHOOSE ONE JOINT OPENING NOTE AND DELETE OTHER.

① DIMENSIONS ARE ALONG CENTERLINE OF JOINT.

② __AT 45° F; __ AT 90° F. 2" AT ALL TEMPS.

③ ⅛" (¼" MAX.). ½" (⅝" MAX.) WHEN SNOWPLOW FINGERS ARE USED. SNOWPLOW FINGERS ARE REQUIRED FOR SKEWS OVER 15° AND LESS THAN 50°.

④ SEE SUPERSTRUCTURE DETAILS FOR RADIUS.

⑤ SEE SHEET NO. __ FOR DIRECTION OF TRAFFIC.

⑥ PLACE BAR-ROD NORMAL TO JOINT ON NEW BRIDGES AND JOINT REPLACEMENTS. ON JOINT REPLACEMENTS WHEN SKEW IS OVER 15° AND LESS THAN 50° BEND RODS PARALLEL TO ℄ ROADWAY.

⑦ EXTEND GLAND 1" MIN. BEYOND THE TOP OF THE EXTRUSION.

⑧ PROVIDE SMOOTH CONCRETE FINISH BENEATH PLATE WITH 0" MIN. TO ⅛" MAX. GAP BETWEEN CONCRETE AND UNDERSIDE OF PLATE. PROVIDE BOND BREAKER (DUCT TAPE, ETC.) TO UNDERSIDE OF COVER PLATE.

⑨ LUBRICANT PER MnDOT APPROVED/QUALIFIED PRODUCTS LIST: BRIDGE GREASE.

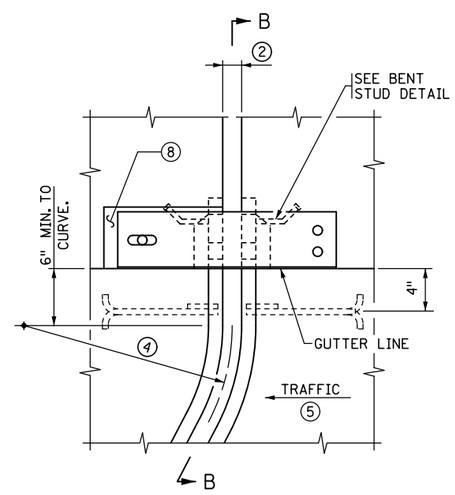

PLAN VIEW @ EXPANSION DEVICE

WITH CURVED DEVICE ALTERNATE

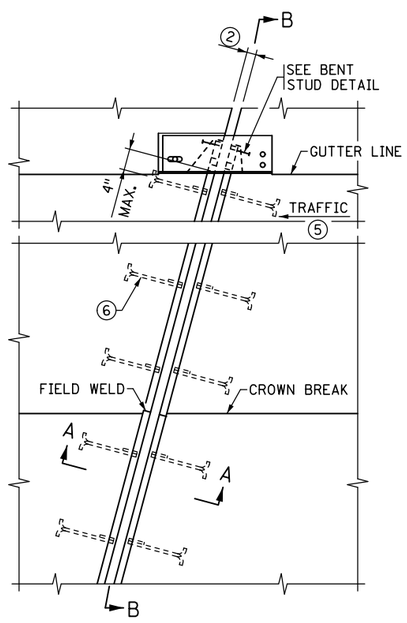

PLAN VIEW @ EXPANSION DEVICE

WITH STRAIGHT DEVICE

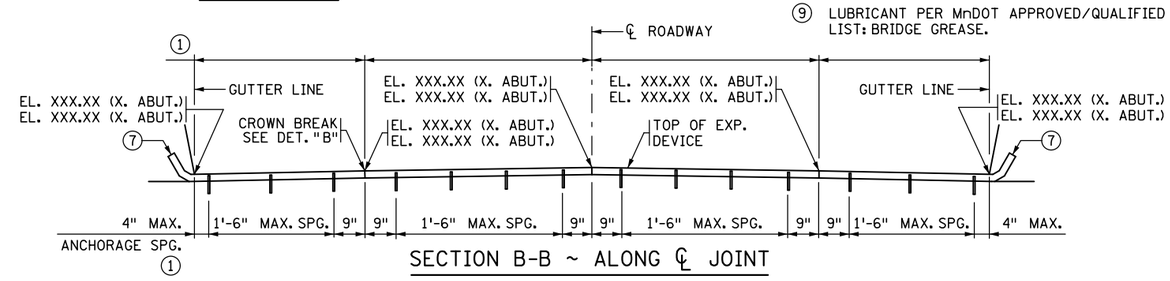

SECTION B-B ~ ALONG ℄ JOINT

ELEVATIONS SHOWN ARE ⅛" BELOW TOP OF SLAB @ ℄ JOINT
ELEVATIONS SHOWN ARE ½" BELOW TOP OF SLAB @ ℄ JOINT

REVISION:

APPROVED: AUGUST 24, 2016
Kevin Western
STATE BRIDGE ENGINEER

CERTIFIED BY _____ LICENSED PROFESSIONAL ENGINEER _____ DATE
NAME: LIC. NO.

TITLE: WATERPROOF EXPANSION DEVICE (WITH TYPE S BARRIER)

DES:	DR:	APPROVED:
CHK:	CHK:	
SHEET NO. OF SHEETS		

FIG. 5-397.627(B)

BRIDGE NO.

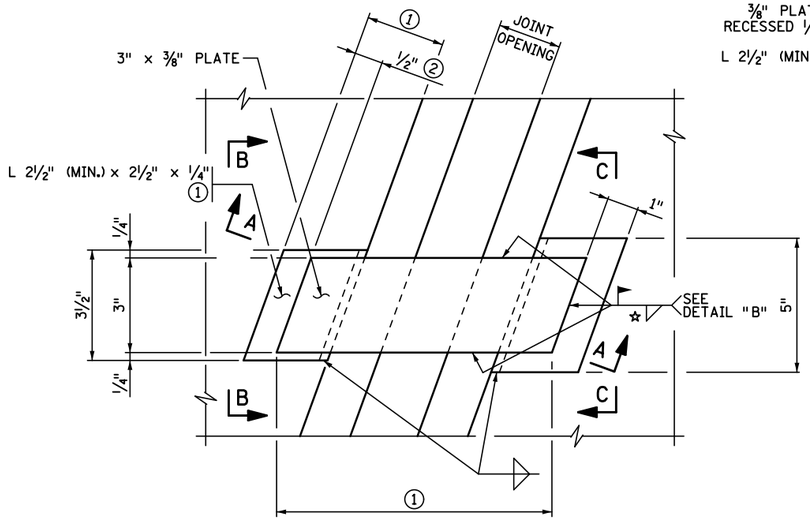

DETAIL "A"

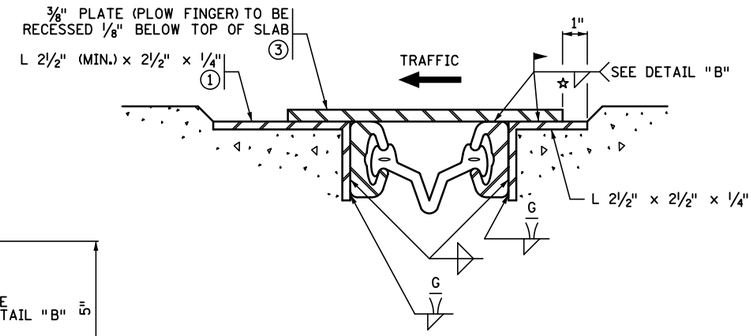

SECTION A-A

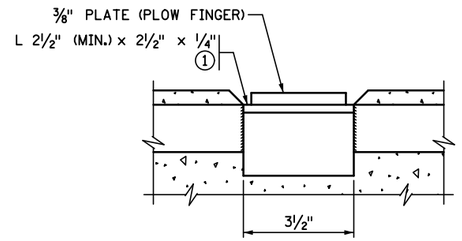

VIEW B-B

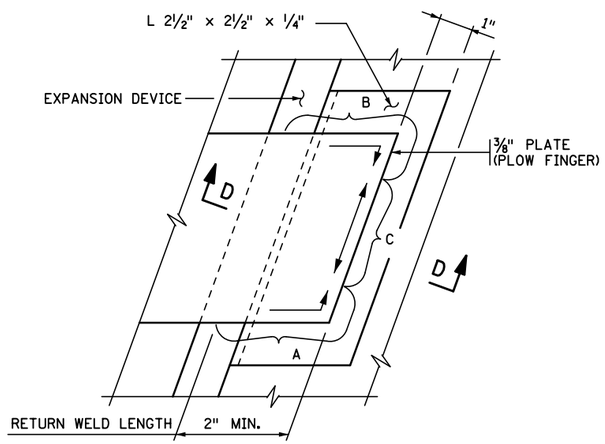

DETAIL "B"

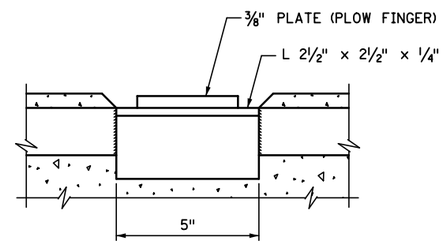

VIEW C-C

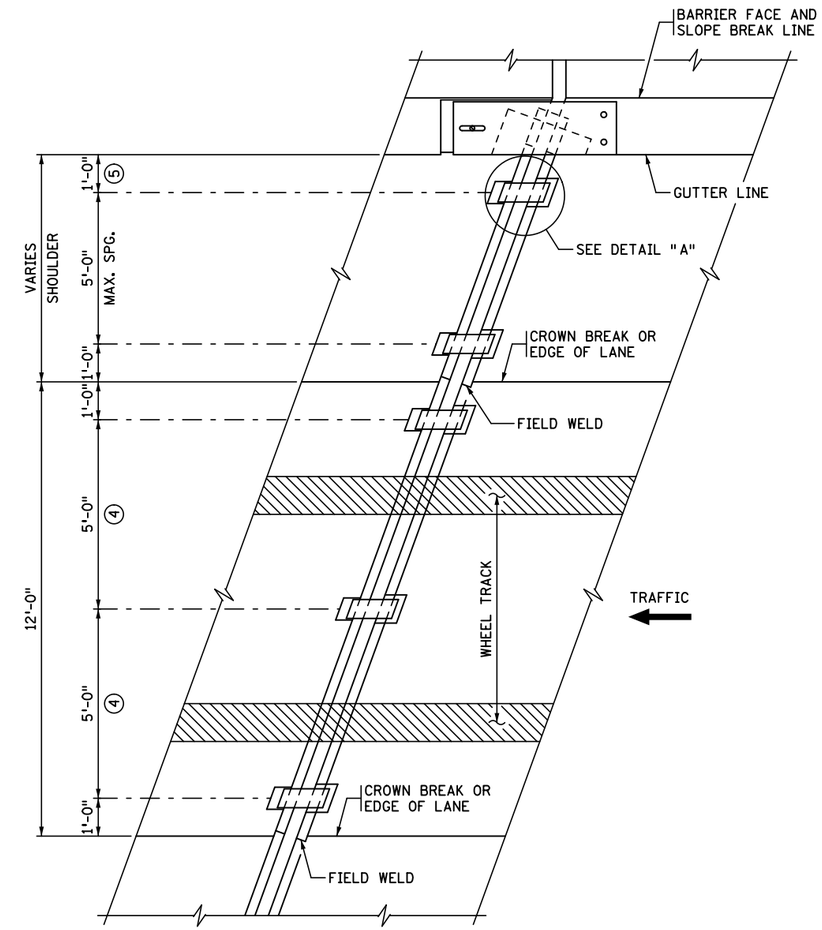

PLAN VIEW AT EXPANSION DEVICE

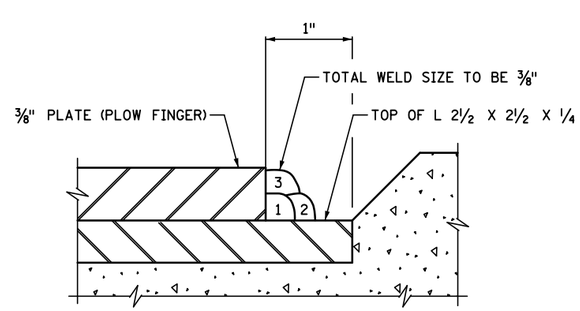

SECTION D-D

☆ WELDING PROCEDURE FOR PLOW FINGERS

I. ALL WELDING SHALL BE DONE WITH 1/8" DIAMETER LOW HYDROGEN SMAW ELECTRODES TYPE E7016 OR E7018.

II. PRIOR TO WELDING, REMOVE THE GALVANIZED COATING IN THE WELD AREA BY GRINDING.

III. WELD PASS ONE IN AREAS A AND B FIRST, THEN AREA C, FOLLOW WITH PASSES TWO AND THREE IN SAME ORDER, AS SHOWN IN DETAIL "B".

IV. REMOVE ALL WELD SLAG AND OTHER RESIDUE BETWEEN PASSES.

V. ALLOW AT LEAST 5 MINUTES COOLING TIME BETWEEN EACH OF THE NINE WELDING PASSES.

GENERAL NOTES

DO NOT GALVANIZE PLOW FINGERS.

① VARIES WITH SKEW AND EXPANSION OPENING.

② MINIMUM IN CLOSED POSITION.

③ EVERY SNOW PLOW FINGER SHALL HAVE FULL AND DIRECT BEARING ON THE PLATE THAT IS LOCATED UNDER THE MOVEMENT SIDE OF THE FINGER. NO CLICKING NOISE WILL BE ALLOWED.

④ MODIFY IF LANE WIDTH DIFFERS FROM 12 FT.

⑤ OMIT LAST PLOW FINGER ON DEVICE WITH CURVED END.

REVISION: 11-06-2013

APPROVED: SEPTEMBER 26, 2003

STATE BRIDGE ENGINEER

CERTIFIED BY _____ LICENSED PROFESSIONAL ENGINEER _____ DATE

NAME: LIC. NO.

TITLE: WATERPROOF EXPANSION DEVICE SNOW PLOW PROTECTION (USE ON SKEWS OVER 15° AND LESS THAN 50°)

DES: DR: CHK: CHK:

SHEET NO. OF SHEETS

FIG. 5-397.628

APPROVED:

BRIDGE NO.

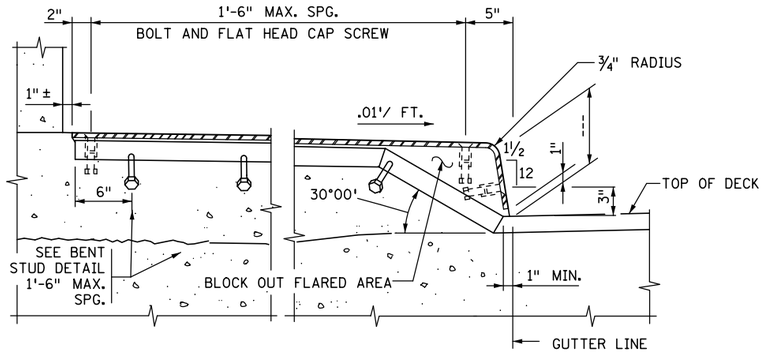

SECTION THROUGH RAISED SIDEWALK - OPTION 1

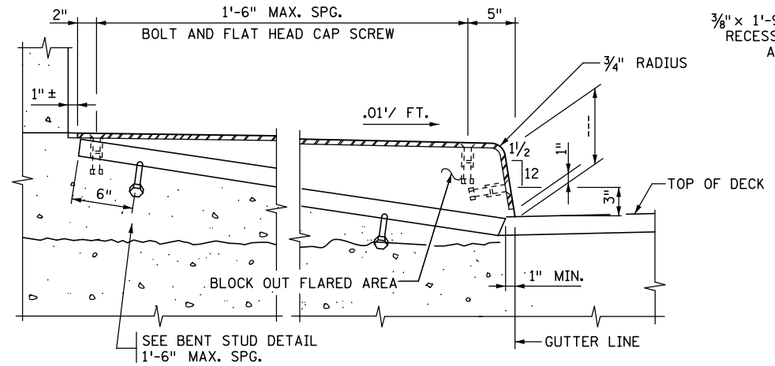

SECTION THROUGH RAISED SIDEWALK - OPTION 2

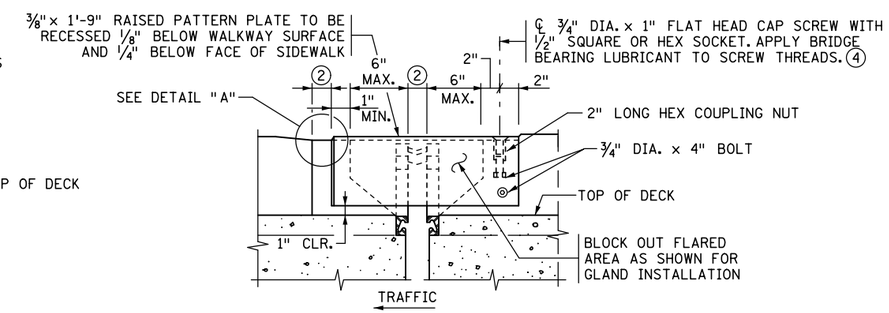

ELEVATION

RAISED SIDEWALK DETAILS

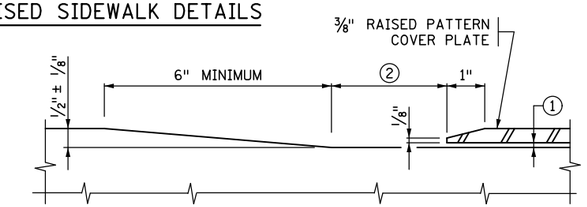

DETAIL "A" 3

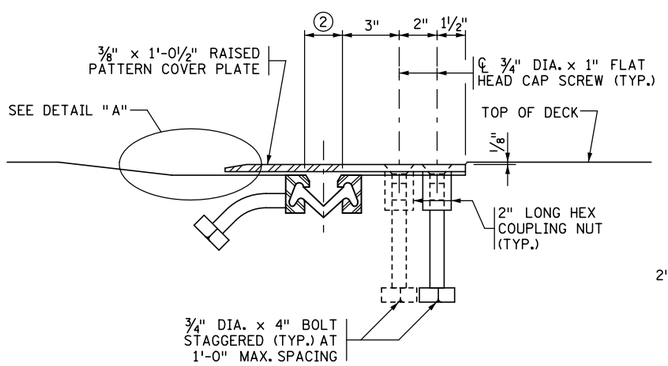

SECTION D-D 3

(INTEGRAL SIDEWALK)

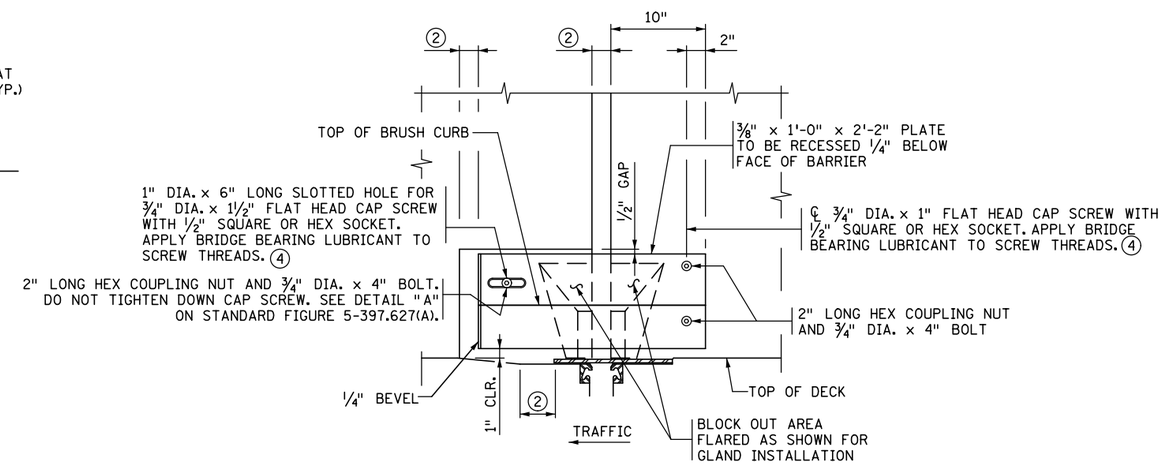

ELEVATION

(CONCRETE PARAPET AND BACK OF TYPE F BARRIER)

GENERAL NOTES

SEE STANDARD FIGURE 5-397.627(A) FOR ADDITIONAL DETAILS AND NOTES.

TRANSVERSE DECK REINFORCEMENT MAY BE SHIFTED THE MINIMUM DISTANCE REQUIRED FOR EXPANSION DEVICE PLACEMENT.

3/4" DIA. X 1 " FLATHEAD CAP SCREW WITH 1/2" SQUARE OR HEX SOCKET PER SPEC 3391. COUNTERSINK CAP SCREWS 1/16" BELOW TOP OF PLATE. APPLY BRIDGE BEARING LUBRICANT PER MnDOT APPROVED PRODUCTS LIST TO SCREW THREADS. 4

1 PROVIDE SMOOTH CONCRETE FINISH BENEATH PLATE WITH 0" MIN. TO 1/8" MAX. GAP BETWEEN CONCRETE AND UNDERSIDE OF PLATE. PROVIDE BOND BREAKER (DUCT TAPE, ETC.) TO UNDERSIDE OF COVER PLATE.

2 SEE NOTE 2 ON STANDARD FIGURE 5-397.627(A).

3 DIMENSIONS SHOWN ARE REQUIRED TO COMPLY WITH A.D.A. STANDARDS.

4 LUBRICANT PER MnDOT APPROVED/QUALIFIED PRODUCTS LIST: BRIDGE GREASE.

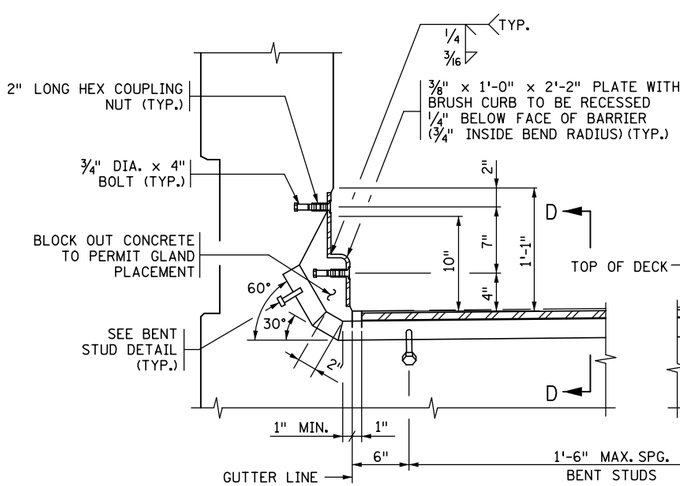

CONCRETE PARAPET BARRIER

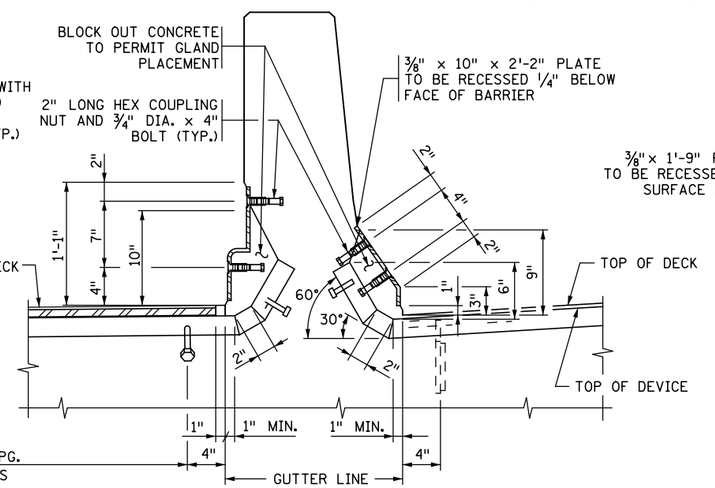

TYPE F BARRIER

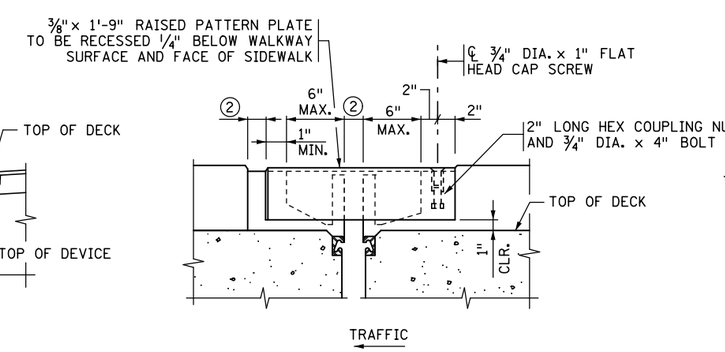

MEDIAN ELEVATION

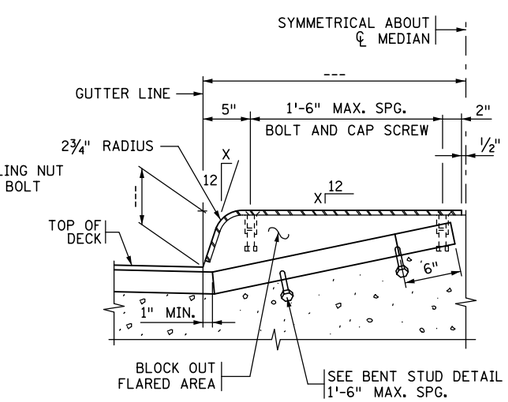

MEDIAN SECTION

SECTION THROUGH BARRIERS - INTEGRAL SIDEWALK

REVISION:

APPROVED: AUGUST 24, 2016

Kevin Western

STATE BRIDGE ENGINEER

CERTIFIED BY _____ LICENSED PROFESSIONAL ENGINEER _____ DATE

NAME: LIC. NO.

TITLE: WATERPROOF EXPANSION DEVICE (RAISED MEDIAN OR SIDEWALK WITH F BARRIER AND PARAPET)

DES: DR: CHK: CHK:

SHEET NO. OF SHEETS

APPROVED:

FIG. 5-397.630(A)

BRIDGE NO.

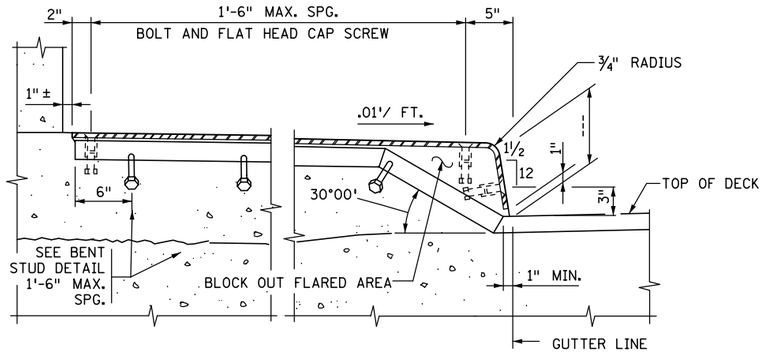

SECTION THROUGH RAISED SIDEWALK - OPTION 1

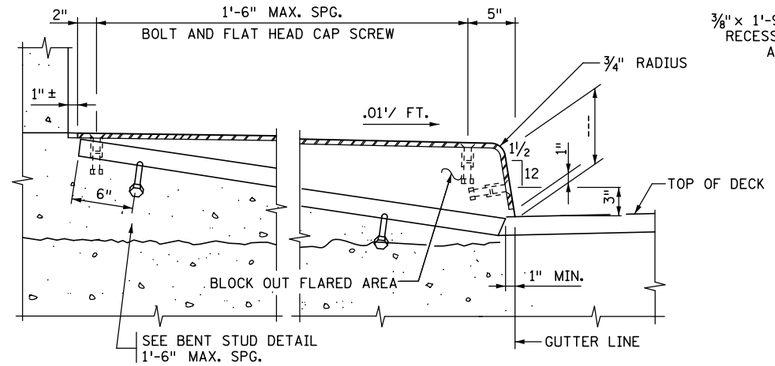

SECTION THROUGH RAISED SIDEWALK - OPTION 2

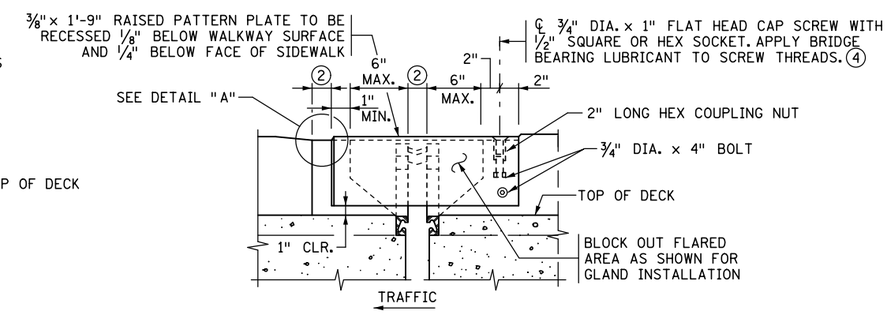

ELEVATION

RAISED SIDEWALK DETAILS

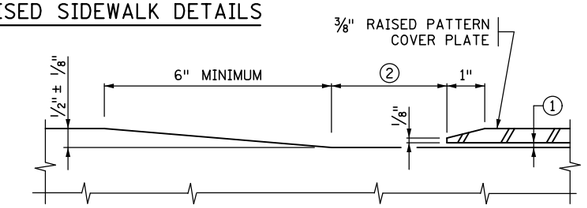

DETAIL "A" 3

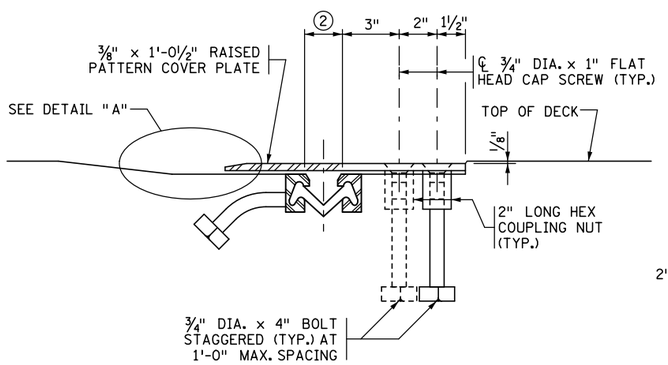

SECTION D-D 3

(INTEGRAL SIDEWALK)

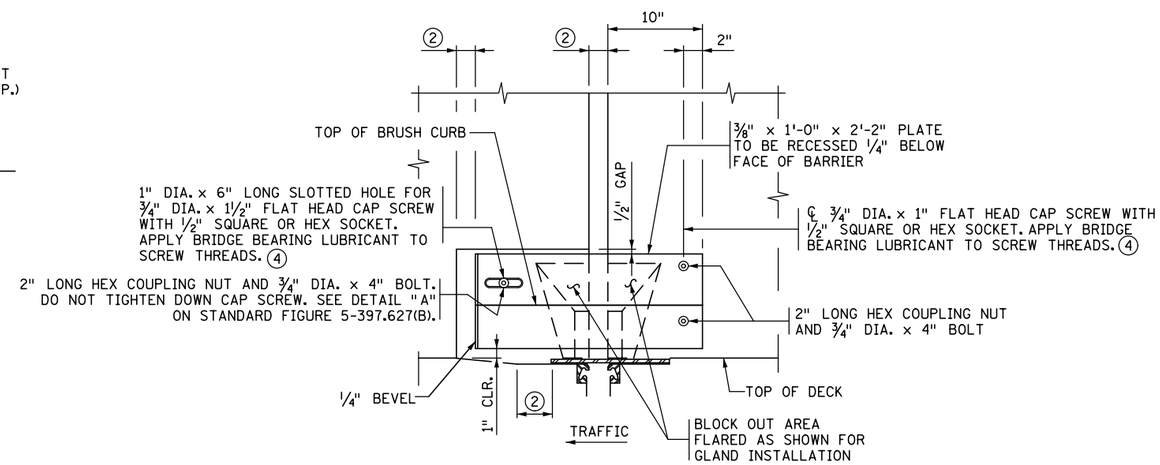

ELEVATION

(CONCRETE PARAPET AND BACK OF TYPE S BARRIER)

GENERAL NOTES

SEE STANDARD FIGURE 5-397.627(B) FOR ADDITIONAL DETAILS AND NOTES.

TRANSVERSE DECK REINFORCEMENT MAY BE SHIFTED THE MINIMUM DISTANCE REQUIRED FOR EXPANSION DEVICE PLACEMENT.

3/4" DIA. X 1 " FLATHEAD CAP SCREW WITH 1/2" SQUARE OR HEX SOCKET PER SPEC 3391. COUNTERSINK CAP SCREWS 1/16" BELOW TOP OF PLATE. APPLY BRIDGE BEARING LUBRICANT PER MnDOT APPROVED PRODUCTS LIST TO SCREW THREADS. 4

1 PROVIDE SMOOTH CONCRETE FINISH BENEATH PLATE WITH 0" MIN. TO 1/8" MAX. GAP BETWEEN CONCRETE AND UNDERSIDE OF PLATE. PROVIDE BOND BREAKER (DUCT TAPE, ETC.) TO UNDERSIDE OF COVER PLATE.

2 SEE NOTE 2 ON STANDARD FIGURE 5-397.627(B).

3 DIMENSIONS SHOWN ARE REQUIRED TO COMPLY WITH A.D.A. STANDARDS.

4 LUBRICANT PER MnDOT APPROVED/QUALIFIED PRODUCTS LIST: BRIDGE GREASE.

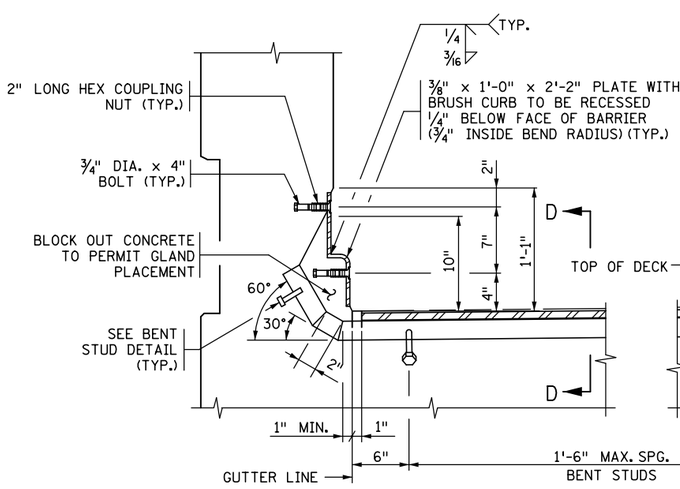

CONCRETE PARAPET BARRIER

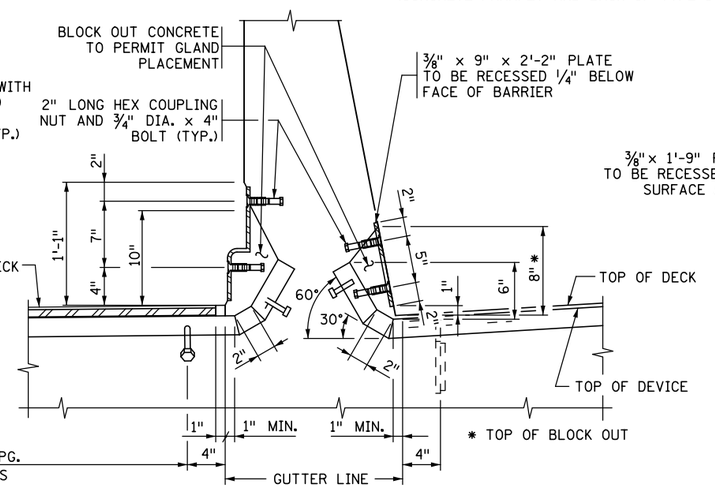

TYPE S BARRIER

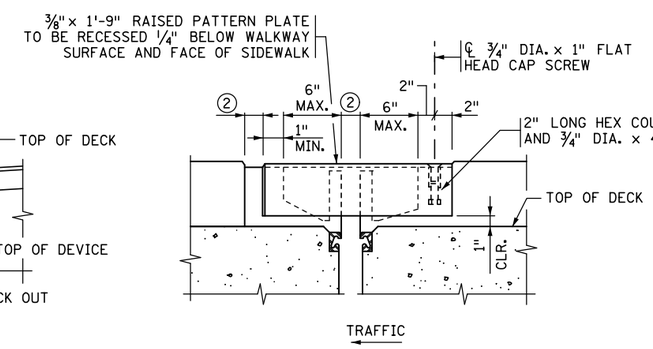

MEDIAN ELEVATION

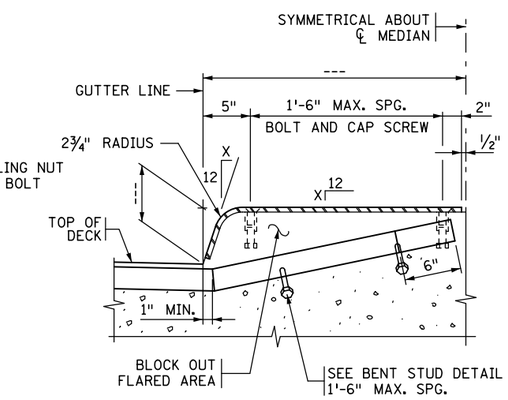

MEDIAN SECTION

SECTION THROUGH BARRIERS - INTEGRAL SIDEWALK

REVISION:

APPROVED: AUGUST 24, 2016

Kevin Western

STATE BRIDGE ENGINEER

CERTIFIED BY _____ LICENSED PROFESSIONAL ENGINEER _____ DATE

NAME: LIC. NO.

TITLE: WATERPROOF EXPANSION DEVICE (RAISED MEDIAN OR SIDEWALK WITH S BARRIER AND PARAPET)

DES: DR: CHK: CHK:

SHEET NO. OF SHEETS

FIG. 5-397.630(B)

APPROVED:

BRIDGE NO.

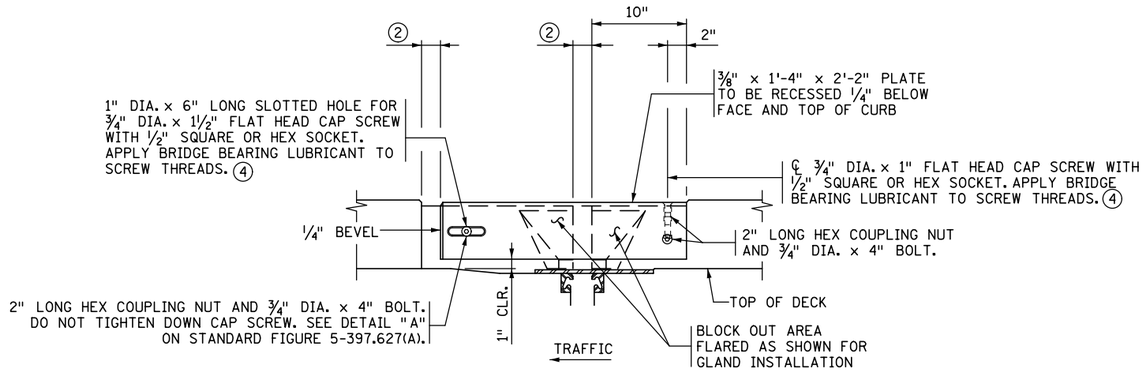

INSIDE ELEVATION OF CONCRETE CURB

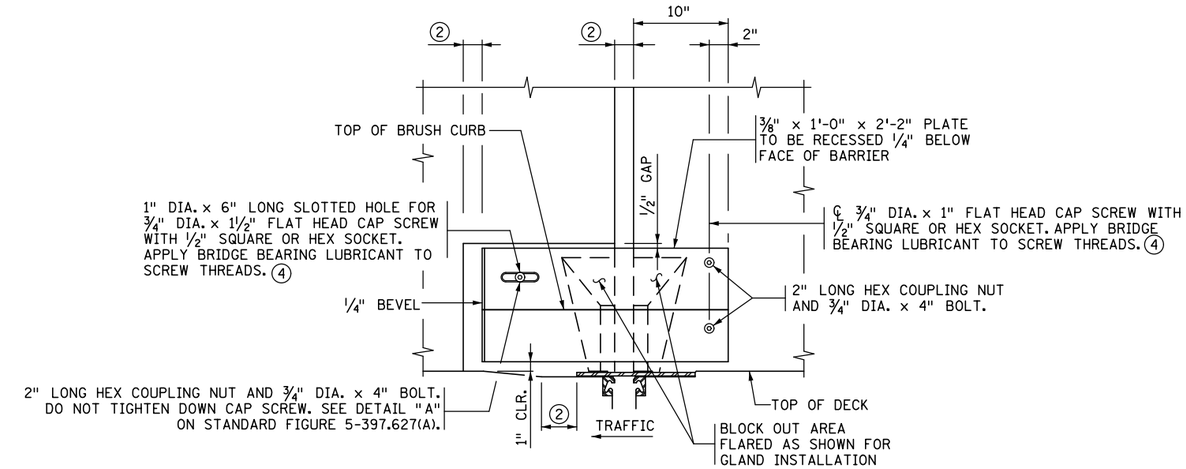

OUTSIDE ELEVATION OF F BARRIER

(BACK OF TYPE F BARRIER)

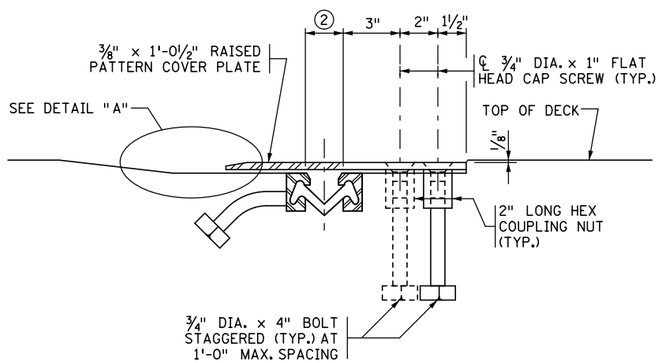

SECTION D-D 3

(INTEGRAL SIDEWALK)

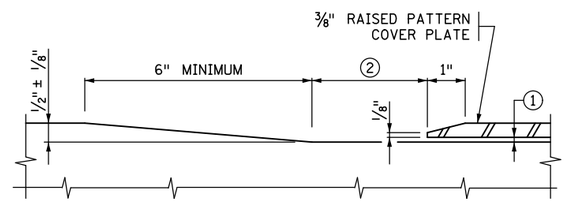

DETAIL "A" 3

GENERAL NOTES

SEE STANDARD FIGURE 5-397.627(A) FOR ADDITIONAL DETAILS AND NOTES.

TRANSVERSE DECK REINFORCEMENT MAY BE SHIFTED THE MINIMUM DISTANCE REQUIRED FOR EXPANSION DEVICE PLACEMENT.

3/4" DIA. X 1" FLAT HEAD CAP SCREW WITH 1/2" SQUARE OR HEX SOCKET PER SPEC 3391. COUNTERSINK CAP SCREWS 1/16" BELOW TOP OF PLATE. APPLY BRIDGE BEARING LUBRICANT TO SCREW THREADS. 4

1 PROVIDE SMOOTH CONCRETE FINISH BENEATH PLATE WITH 0" MIN. TO 1/8" MAX. GAP BETWEEN CONCRETE AND UNDERSIDE OF PLATE. PROVIDE BOND BREAKER (DUCT TAPE, ETC.) TO UNDERSIDE OF COVER PLATE.

2 SEE NOTE 2 ON STANDARD FIGURE 5-397.627(A).

3 DIMENSIONS SHOWN ARE REQUIRED TO COMPLY WITH A.D.A. STANDARDS.

4 LUBRICANT PER MnDOT APPROVED/QUALIFIED PRODUCTS LIST: BRIDGE GREASE.

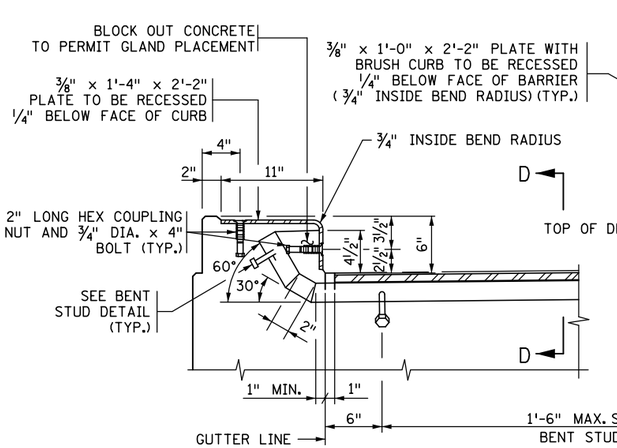

CONCRETE CURB

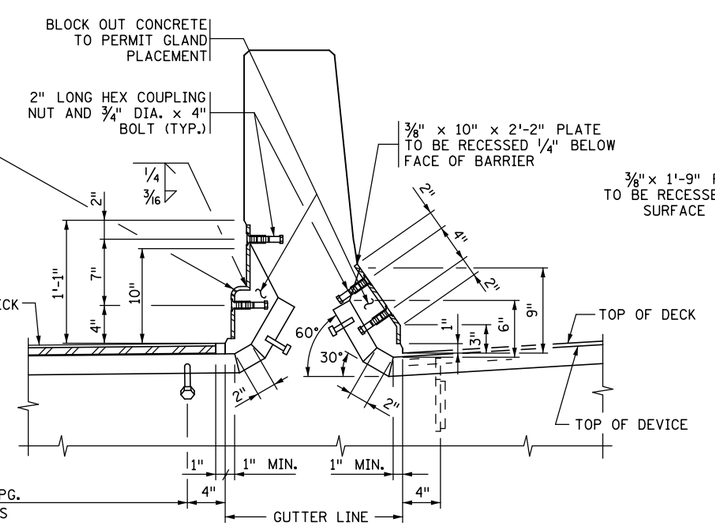

TYPE F BARRIER

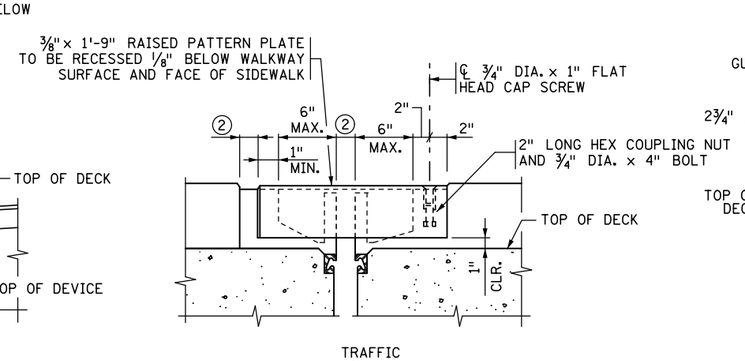

MEDIAN ELEVATION

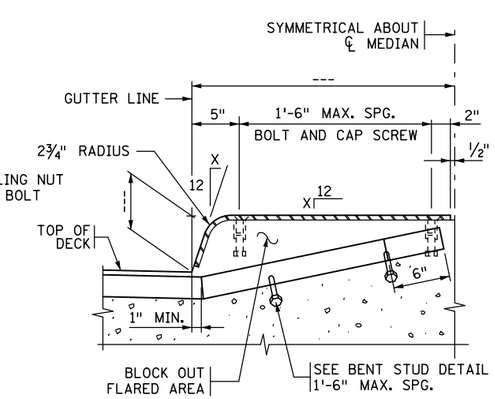

MEDIAN SECTION

SECTION THROUGH BARRIER AND CURB - INTEGRAL SIDEWALK

REVISION:	CERTIFIED BY _____ LICENSED PROFESSIONAL ENGINEER DATE	TITLE: WATERPROOF EXPANSION DEVICE (RAISED MEDIAN OR INTEGRAL SIDEWALK WITH F BARRIER AND CURB)	DES: DR: CHK: CHK:	FIG. 5-397.632(A)
APPROVED: AUGUST 24, 2016 Kevin Western STATE BRIDGE ENGINEER	NAME: LIC. NO.		SHEET NO. OF SHEETS	APPROVED: BRIDGE NO.

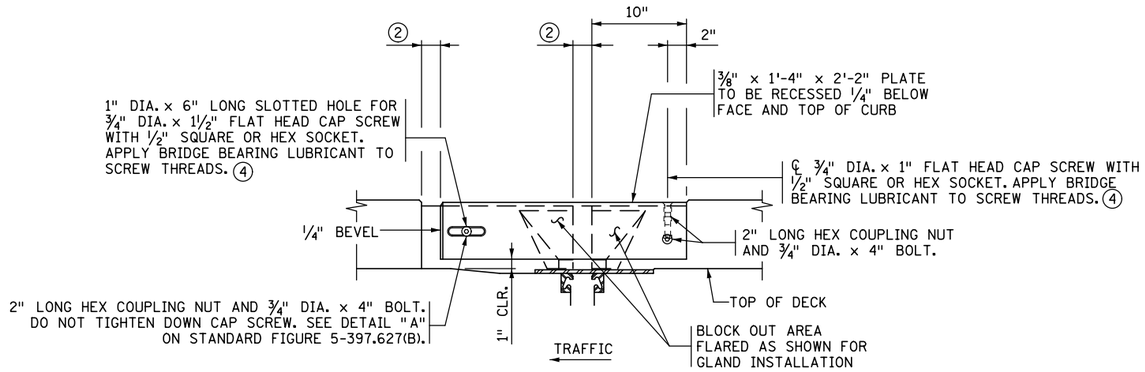

INSIDE ELEVATION OF CONCRETE CURB

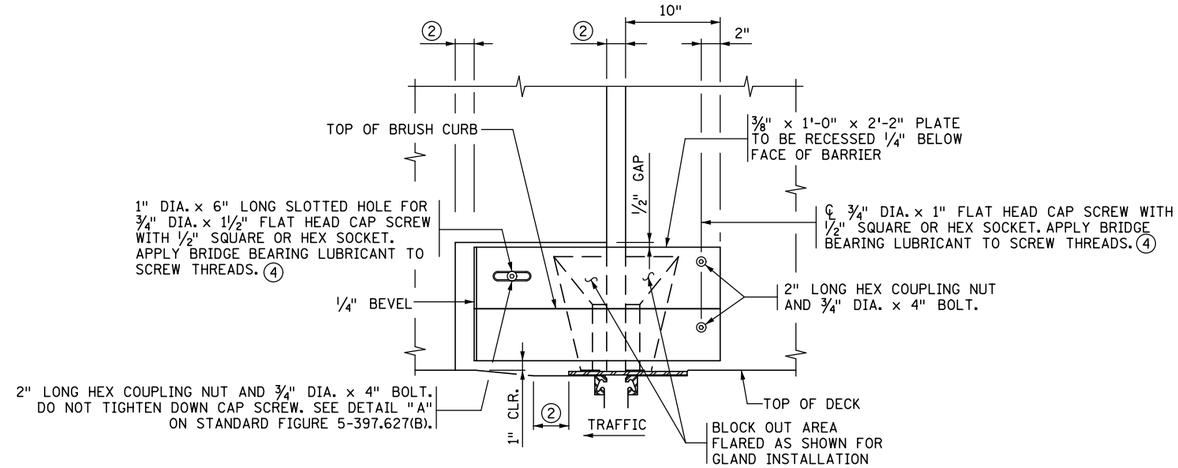

OUTSIDE ELEVATION OF S BARRIER

(BACK OF TYPE S BARRIER)

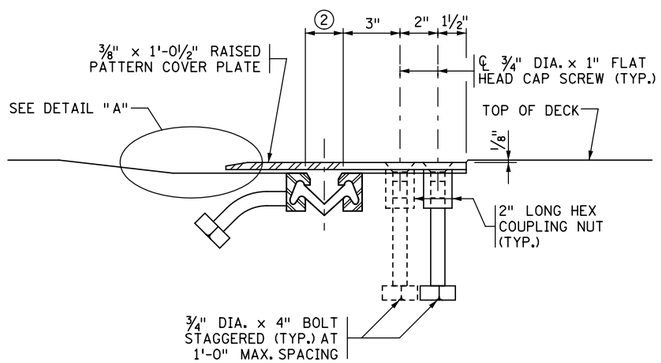

SECTION D-D 3

(INTEGRAL SIDEWALK)

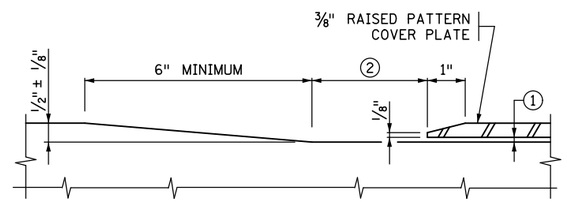

DETAIL "A" 3

GENERAL NOTES

SEE STANDARD FIGURE 5-397.627(B) FOR ADDITIONAL DETAILS AND NOTES.

TRANSVERSE DECK REINFORCEMENT MAY BE SHIFTED THE MINIMUM DISTANCE REQUIRED FOR EXPANSION DEVICE PLACEMENT.

3/4" DIA. X 1" FLAT HEAD CAP SCREW WITH 1/2" SQUARE OR HEX SOCKET PER SPEC 3391. COUNTERSINK CAP SCREWS 1/16" BELOW TOP OF PLATE. APPLY BRIDGE BEARING LUBRICANT TO SCREW THREADS. 4

1 PROVIDE SMOOTH CONCRETE FINISH BENEATH PLATE WITH 0" MIN. TO 1/8" MAX. GAP BETWEEN CONCRETE AND UNDERSIDE OF PLATE. PROVIDE BOND BREAKER (DUCT TAPE, ETC.) TO UNDERSIDE OF COVER PLATE.

2 SEE NOTE 2 ON STANDARD FIGURE 5-397.627(B).

3 DIMENSIONS SHOWN ARE REQUIRED TO COMPLY WITH A.D.A. STANDARDS.

4 LUBRICANT PER MnDOT APPROVED/QUALIFIED PRODUCTS LIST: BRIDGE GREASE.

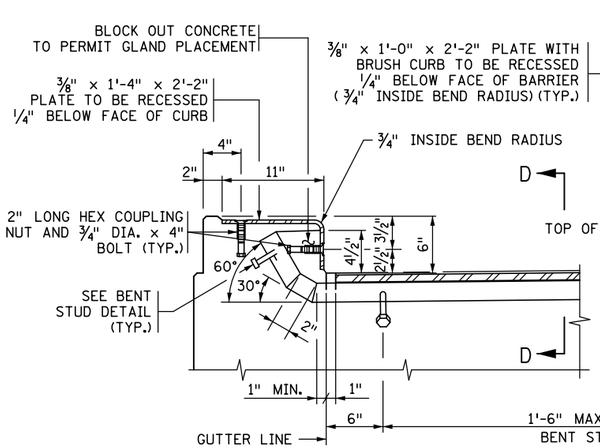

CONCRETE CURB

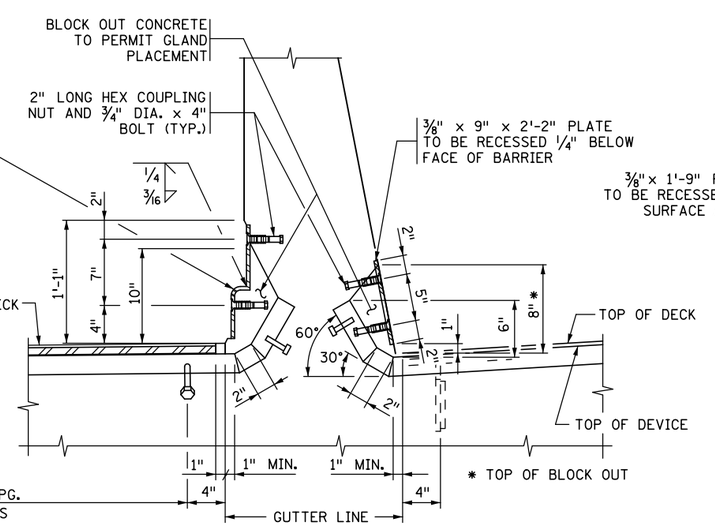

TYPE S BARRIER

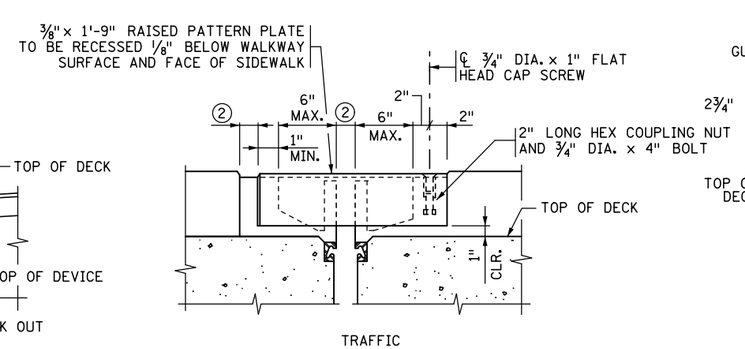

MEDIAN ELEVATION

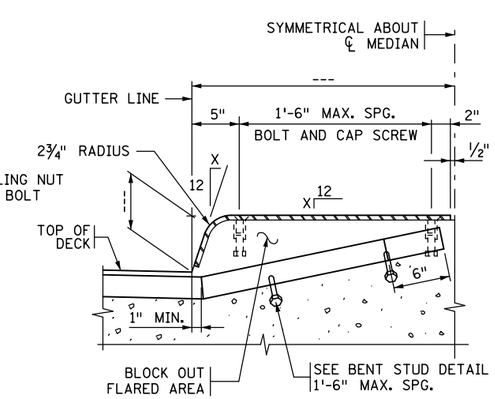

MEDIAN SECTION

SECTION THROUGH BARRIER AND CURB - INTEGRAL SIDEWALK

REVISION:	CERTIFIED BY _____ LICENSED PROFESSIONAL ENGINEER DATE	TITLE: WATERPROOF EXPANSION DEVICE (RAISED MEDIAN OR INTEGRAL SIDEWALK WITH S BARRIER AND CURB)	DES: DR: CHK: CHK:	FIG. 5-397.632(B)
APPROVED: AUGUST 24, 2016 Kevin Western STATE BRIDGE ENGINEER	NAME: LIC. NO.		SHEET NO. OF SHEETS	APPROVED: BRIDGE NO.

CONCRETE WEARING COURSE

☐ LOW SLUMP

☐ OTHER _____
TYPE OR MANUFACTURER

EXPANSION JOINTS

JOINT MANUFACTURER

MANUFACTURER'S IDENTIFICATION _____
MFR'S No. AND/OR LETTER DESIGNATION FOR JOINT USED

GLAND MANUFACTURER _____
NAME AND ADDRESS (CITY, STATE)

SIZE OF GLAND _____

MANUFACTURER'S IDENTIFICATION _____
MFR'S No. AND/OR LETTER DESIGNATION FOR GLAND USED

ELASTOMERIC BEARING PADS

PAD MANUFACTURER _____
NAME AND ADDRESS (CITY, STATE)

SPECIAL SURFACE FINISH

SYSTEM: _____ COLOR: _____

FINISHING ROADWAY FACES OF BARRIER RAILING

TYPE: _____ COLOR: _____

ANTI-GRAFFITI COATING

MANUFACTURER _____
NAME AND ADDRESS (CITY, STATE)

PRODUCT NAME: _____ LOCATION: _____

PAINT SYSTEM

Mn/DOT SPECIFICATION NUMBER _____
2478 OR 2479 OR OTHER

MANUFACTURER _____
NAME AND ADDRESS (CITY, STATE)

PRIME COAT _____
Mn/DOT MATERIAL SPECIFICATION NUMBER

INTERMEDIATE COAT _____
Mn/DOT MATERIAL SPECIFICATION NUMBER

FINISH COAT _____ _____
Mn/DOT MATERIAL SPECIFICATION NUMBER COLOR

PLAN QUALITY

RATE 1 (AGREE), 2 (NEUTRAL), OR 3 (DISAGREE, PLEASE COMMENT BELOW)

DIMENSIONING AND DETAILING ADEQUATELY DESCRIBED REQUIRED CONSTRUCTION. _____

BAR LISTS AND QUANTITIES WERE TYPICALLY COMPLETE AND FREE OF ERRORS. _____

SCALE OF DRAWINGS AND OVERALL LEGIBILITY OF LINES AND TEXT WAS GOOD. _____

(SB) SPECIAL PROVISIONS ADEQUATELY DESCRIBED SPECIAL WORK AND PAYMENT. _____

COMMENTS: _____

NUMBER OF BRIDGE SUPPLEMENTAL AGREEMENTS: _____ COST: $ _____

LIST SIGNIFICANT ERRORS OR OMISSIONS IN PLAN DETAILS OR PAY QUANTITIES IN THE SPACE PROVIDED AT RIGHT.

BRIDGE REMOVAL / BRIDGE OPENING

NUMBER OF AND DATE OLD BRIDGE WAS REMOVED (IF APPLICABLE):

BRIDGE NUMBER _____ DATE REMOVED _____

DATE NEW BRIDGE WAS OPENED TO TRAFFIC _____

NOTIFY THE BRIDGE OFFICE BRIDGE MANAGEMENT UNIT WITH THIS INFORMATION AS SOON AS POSSIBLE. (651) 366-4557

OTHER ITEMS ①

① UTILITIES ADDED DURING CONSTRUCTION AND SPECIALTY ITEMS.

FINAL QUANTITIES ENTERED ON SCHEDULE OF QUANTITIES: YES ☐ NO ☐

SUMMARY OF SIGNIFICANT AS-BUILT CHANGES

THE AS-BUILT INFORMATION WAS ADDED TO THE PLAN BY:

_____ _____
INSPECTOR(S) SIGNATURE DATE

CHECKED BY: _____ _____
PROJECT ENGINEER/SUPERVISOR SIGNATURE DATE

AT THE TIME OF THE FINAL, THIS COMPLETED AS-BUILT BRIDGE DATA SHEET MUST BE SUBMITTED TO THE BRIDGE OFFICE - ATTN: REGIONAL CONSTRUCTION ENGINEER (MS610).

REVISION: 10-28-2008

APPROVED: SEPTEMBER 26, 2003
STATE BRIDGE ENGINEER

AS-BUILT DETAILS
(AS NEEDED)

FIG. 5-397.900

TITLE: AS-BUILT BRIDGE DATA

DES: ------ DR: ------ APPROVED:
CHK: ------ CHK: ------

SHEET NO. __ OF __ SHEETS

BRIDGE NO. -----