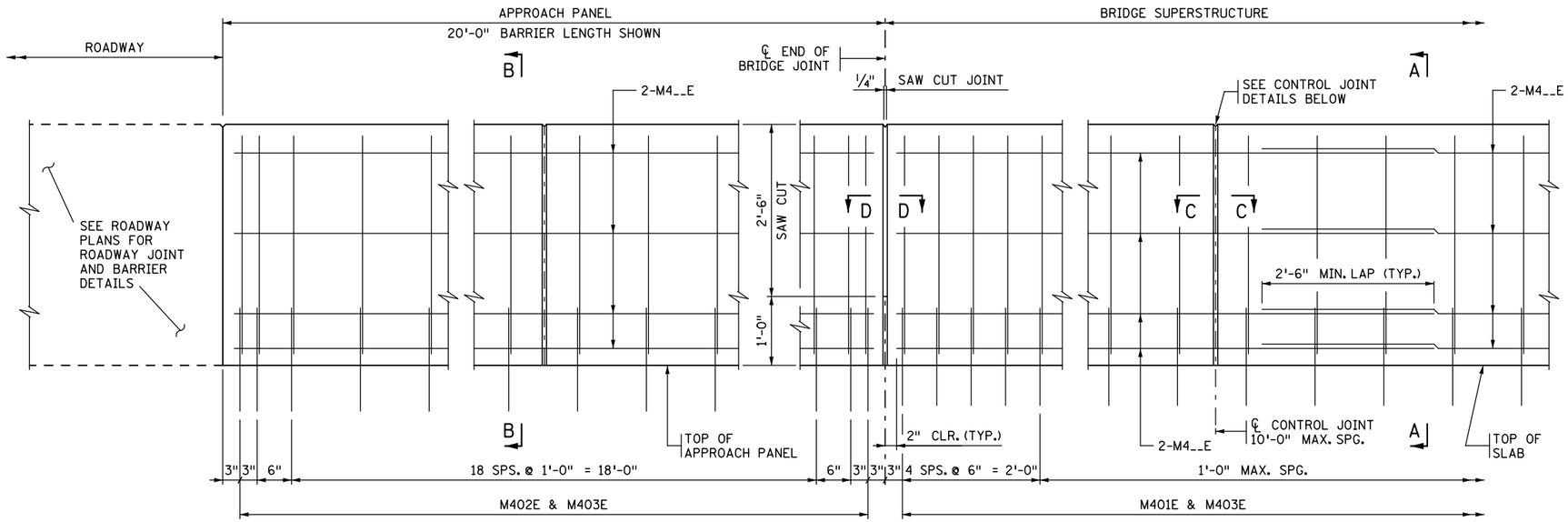

JOINT AT ABUTMENT

(INTEGRAL OR SEMI-INTEGRAL ABUTMENT)

CONTROL JOINT

INSIDE ELEVATION OF BARRIER

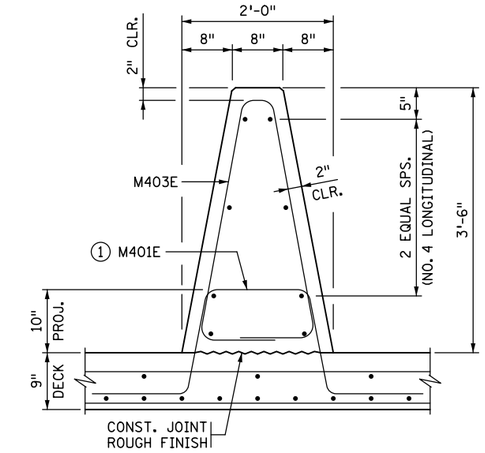

SECTION A-A

DESIGNER NOTE
(REMOVE PRIOR TO PLOTTING FINAL PLAN):
VERIFY LENGTH OF BARRIER ON APPROACH PANEL WITH ROADWAY DESIGNER. REFER TO MEMO TO DESIGNERS (2016-01) FOR ADDITIONAL REQUIREMENTS REGARDING BARRIER PLACEMENT.

BARRIER MEETS NCHRP 350 TL-4 REQUIREMENTS ON BRIDGE DECK AND TL-3 ON APPROACH PANEL.

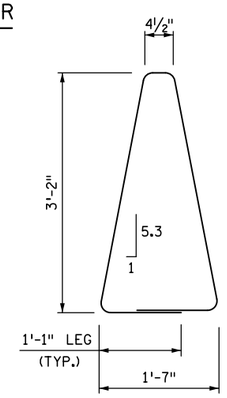

M403E

BILL OF REINFORCEMENT FOR BARRIER				
BAR	NO.	LENGTH	SHAPE	LOCATION
M401E		6'-9"		BARRIER DOWEL
M402E		6'-10"		BARRIER DOWEL
M403E		8'-11"		BARRIER VERTICAL
M4__E				BARRIER LONGITUDINAL
M4__E				BARRIER LONGITUDINAL
M4__E				BARRIER LONGITUDINAL
M4__E				BARRIER LONGITUDINAL
M4__E				BARRIER LONGITUDINAL

GENERAL NOTES

MEASURE PAYMENT LENGTH BETWEEN THE OUTSIDE ENDS OF THE BARRIER FROM THE E8 JOINT.

CONCRETE BARRIER = 700 LBS./FT. (0.173 CU. YDS/FT.)

FINISH ALL EDGES OF BARRIER WITH 1/2" CHAMFER EXCEPT WHERE OTHERWISE NOTED.

SPACE CONTROL JOINTS AT 10 FT. MAXIMUM. REFER TO SUPERSTRUCTURE SHEET FOR SPECIFIC SPACING INFORMATION.

BARRIER QUANTITIES ARE LISTED IN SUMMARY OF QUANTITIES FOR SUPERSTRUCTURE.

1 PLACE BAR ON TOP OF BOTTOM REINFORCEMENT MAT IN DECK.

2 JOINT SEALANT PER MnDOT APPROVED/QUALIFIED PRODUCTS LIST - CRACK AND JOINT MATERIALS - SILICONE JOINT SEALERS.

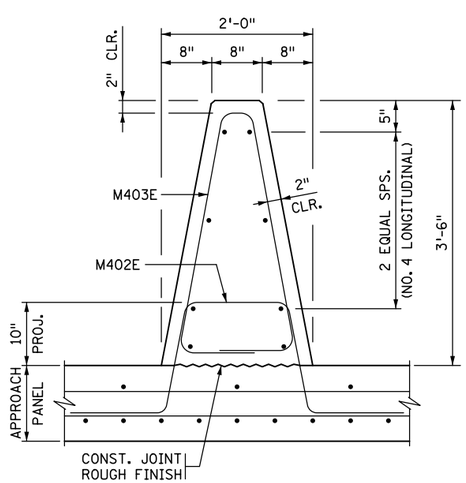

SECTION B-B

CONCRETE APPROACH PANEL

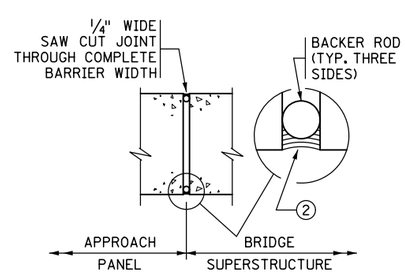

SECTION D-D

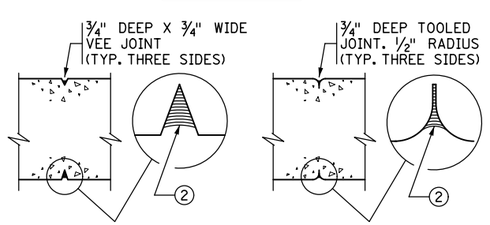

SECTION C-C

CONTRACTOR OPTION 1

SECTION C-C

CONTRACTOR OPTION 2

CONTROL JOINT DETAILS

WHEN USING SLIP FORM METHOD TO PLACE THE CONCRETE, CUT JOINT 3 INCHES DEEP USING MARGIN TROWEL OR SIMILAR MEANS IMMEDIATELY AFTER CONCRETE PLACEMENT (TYP. THREE SIDES).

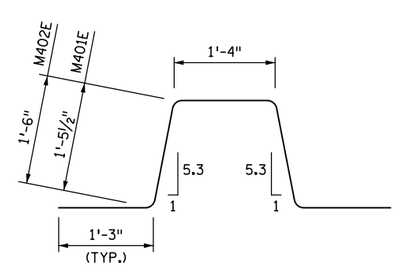

M401E & M402E

REVISION:

APPROVED: AUGUST 24, 2016

Kevin Western

STATE BRIDGE ENGINEER

CERTIFIED BY _____ LICENSED PROFESSIONAL ENGINEER _____ DATE

NAME: LIC. NO.

TITLE: SOLID MEDIAN BARRIER 42" (TYPE S, TL-4)

INTEGRAL OR SEMI-INTEGRAL ABUTMENT (WITHOUT CONCRETE WEARING COURSE)

DES: DR: CHK: CHK:

SHEET NO. OF SHEETS

APPROVED:

FIG. 5-397.148(A)

BRIDGE NO.