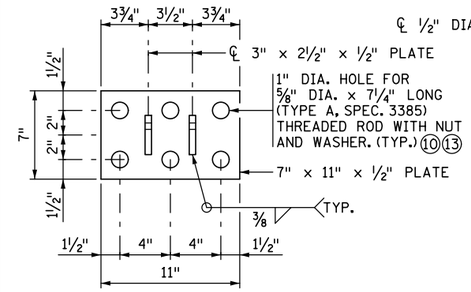

CABLE ANCHOR PLATE DETAIL

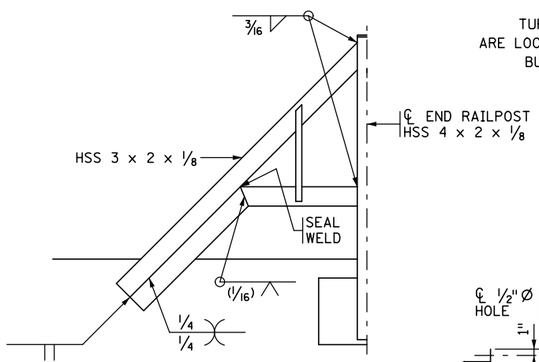

WELDS AT END PANEL

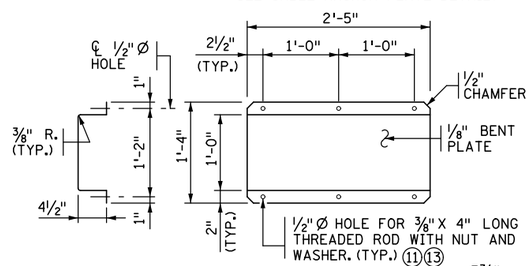

COVER PLATE DETAIL

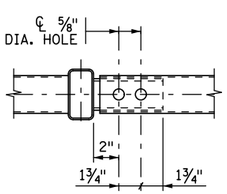

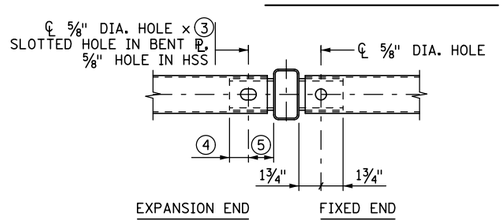

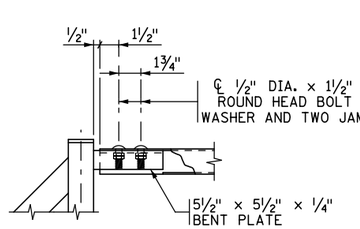

END RAILPOST DETAIL

TOP AND BOTTOM RAIL CONNECTIONS ARE SIMILAR

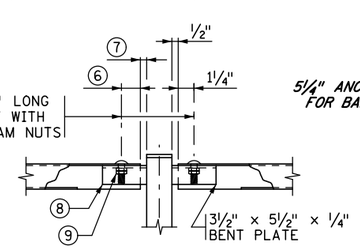

INTERMEDIATE RAILPOST DETAIL

TOP AND BOTTOM RAIL CONNECTIONS ARE SIMILAR

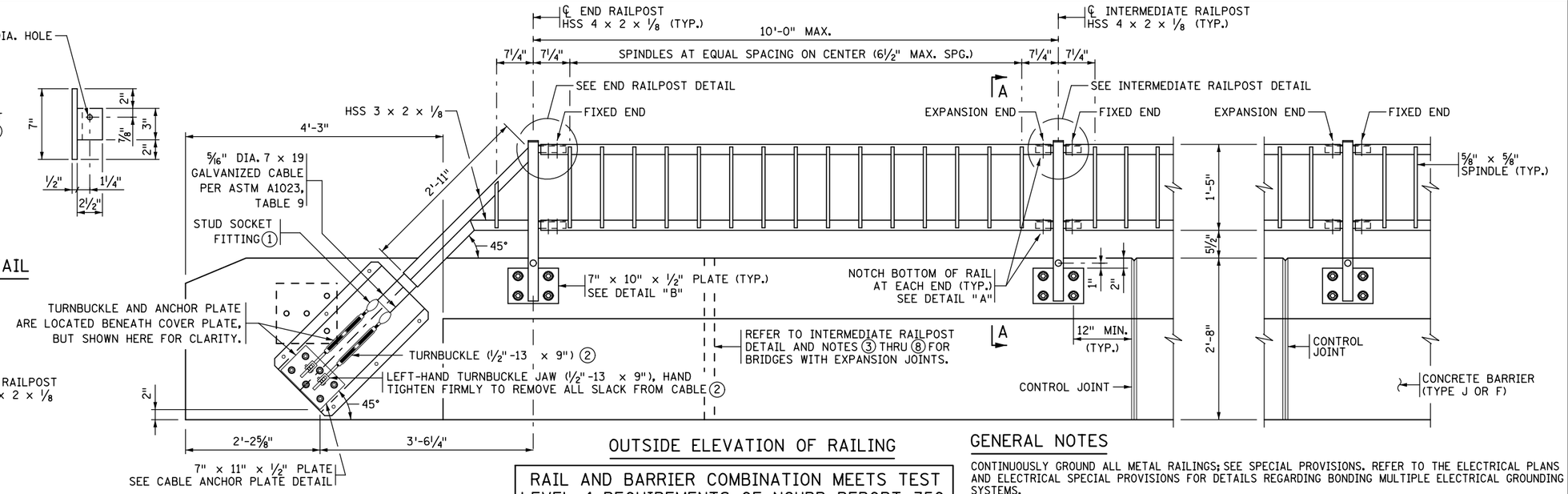

OUTSIDE ELEVATION OF RAILING

RAIL AND BARRIER COMBINATION MEETS TEST LEVEL 4 REQUIREMENTS OF NCHRP REPORT 350.

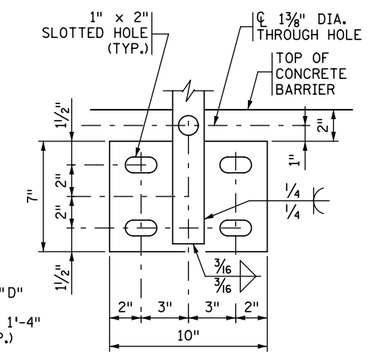

DETAIL "B"

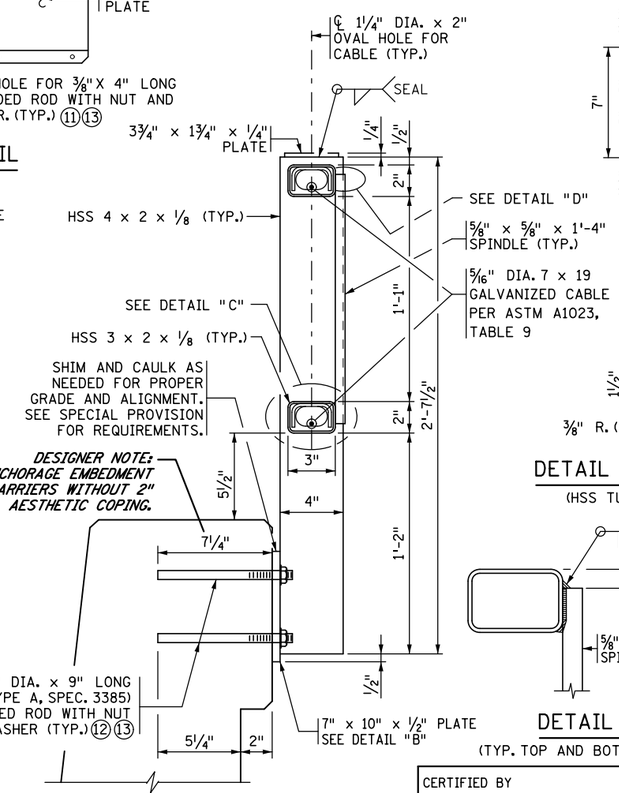

SECTION A-A

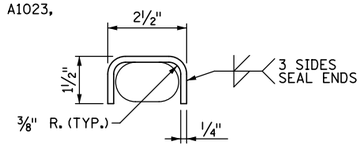

DETAIL "C" - BENT PLATE

(HSS TUBE RAIL NOT SHOWN)

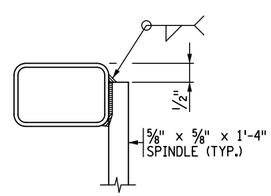

DETAIL "D"

(TYP. TOP AND BOTTOM RAIL)

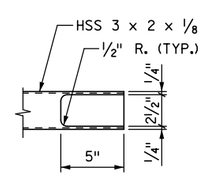

DETAIL "A"

GENERAL NOTES

CONTINUOUSLY GROUND ALL METAL RAILINGS; SEE SPECIAL PROVISIONS. REFER TO THE ELECTRICAL PLANS AND ELECTRICAL SPECIAL PROVISIONS FOR DETAILS REGARDING BONDING MULTIPLE ELECTRICAL GROUNDING SYSTEMS.

REFER TO SUPERSTRUCTURE AND CONCRETE BARRIER SHEETS FOR ADDITIONAL DETAILS AND RAILPOST AND/OR CONTROL JOINT SPACING.

MEASURE PAYMENT LENGTH OF "STRUCTURAL TUBE RAILING (DESIGN T-2)" FROM CABLE ANCHOR PLATE TO CABLE ANCHOR PLATE.

PROVIDE A500, GRADE B STRUCTURAL STEEL TUBING. PROVIDE ALL OTHER STRUCTURAL STEEL PER SPEC. 3306.

GALVANIZE THREADED RODS, BOLTS, NUTS AND WASHERS PER SPEC. 3392. GALVANIZE ALL OTHER STRUCTURAL STEEL PER SPEC. 3394 AFTER FABRICATION. SEAL WELD ALL SURFACES PRIOR TO GALVANIZING.

STRAIGHTEN ALL RAILING MEMBERS AFTER FABRICATION AND GALVANIZING TO WITHIN ⅛" IN 10 FT. BY MECHANICAL MEANS WITHOUT DAMAGE TO ZINC COATING.

INSTALL RAILPOSTS AND SPINDLES NORMAL TO GRADE.

TURNBUCKLE COVER PLATE, ALL STRUCTURAL STEEL, THREADED ROD, AND EXPOSED BOLTS, NUTS AND WASHERS ARE TO BE PAINTED AFTER GALVANIZING IN ACCORDANCE WITH THE SPECIAL PROVISIONS. TURNBUCKLE COVER PLATE PAINT COLOR TO MATCH CONCRETE SURFACE TREATMENT.

① ½" X 13 COARSE THREAD GALVANIZED FORGED ELECTROLINE STUD SOCKET ASSEMBLY WITH PLUG & SLEEVE, GD-331-X, EXTRA IMPROVED PLOW STEEL WITH MIN. BREAKING STRENGTH OF 10,540 LBS.

② GALVANIZED JAW AND JAW TURNBUCKLE PER ASTM F1145 TYPE 1, GRADE 1 WITH MIN. BREAKING STRENGTH OF 11,000 LBS. USE ONE TURNBUCKLE ON EACH END OF EACH CABLE.

③ 1¼" (AT TYP. EXP. END) OR 3" (AT EXP. END AT EXPANSION JOINT)

④ 1½" (AT TYP. EXP. END) OR 2½" (AT EXP. END AT EXPANSION JOINT)

⑤ 2" (AT TYP. EXP. END) OR 3" (AT EXP. END AT EXPANSION JOINT)

⑥ 1½" (AT TYP. EXP. END) OR 2½" (AT EXP. END AT EXPANSION JOINT)

⑦ ½" (AT TYP. EXP. END) OR 1½" (AT EXP. END AT EXPANSION JOINT)

⑧ 3½" × 5½" × ¼" BENT PLATE (AT TYP. EXP. END)
5½" × 6½" × ¼" BENT PLATE (AT EXP. END AT EXPANSION JOINT)

⑨ AT EXPANSION END PROVIDE 1/16" GAP BETWEEN UNDERSIDE OF BENT PLATE AND UPPER NUT TO ALLOW LATERAL MOVEMENT OF THE RAIL.

⑩ 5" MINIMUM EMBEDMENT, TORQUE TO 30 FT. LBS.

⑪ 3" MINIMUM EMBEDMENT, TORQUE TO 20 FT. LBS.

⑫ 7¼" MINIMUM EMBEDMENT, TORQUE TO 80 FT. LBS.

⑬ ADHESIVE ANCHORAGE WITH ANCHOR ROD PER SPEC. 3385, TYPE A WITH HEX NUT AND WASHER. PROVIDE AN ADHESIVE WITH A MINIMUM CHARACTERISTIC BOND STRENGTH IN UNCRACKED CONCRETE OF 1.5 KSI. EMBED THE ANCHORAGE NO LESS THAN EMBEDMENT SHOWN REGARDLESS OF CHARACTERISTIC BOND STRENGTH. DRILL THROUGH REINFORCEMENT (IF ENCOUNTERED) TO ACHIEVE MINIMUM EMBEDMENT. ENSURE HEX NUT IS IN CONTACT WITH THE ADJACENT SURFACE AND TORQUE TO VALUE SHOWN UNLESS A HIGHER TORQUE IS RECOMMENDED BY THE MANUFACTURER. SEE SPECIAL PROVISIONS FOR ADDITIONAL REQUIREMENTS.

REVISED:

APPROVED: DECEMBER 02, 2015
Beverly A. E. Sanchez
STATE BRIDGE ENGINEER

CERTIFIED BY
LICENSED PROFESSIONAL ENGINEER DATE
NAME: LIC. NO.

TITLE: STRUCTURAL TUBE RAILING (DESIGN T-2)
FOR CONCRETE J OR F BARRIER

DES:	DR:	APPROVED:	FIG. 5-397.158
CHK:	CHK:		BRIDGE NO.
SHEET NO. OF SHEETS			