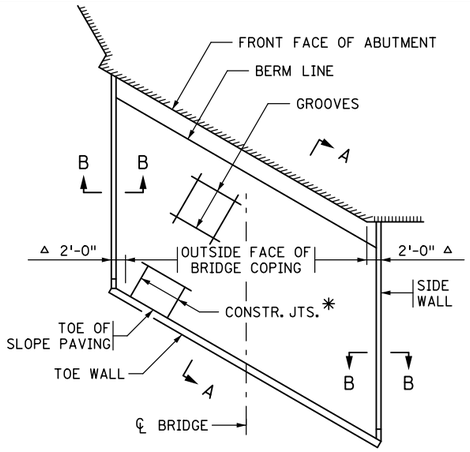

LAYOUT FOR SLOPES 1:2 OR FLATTER

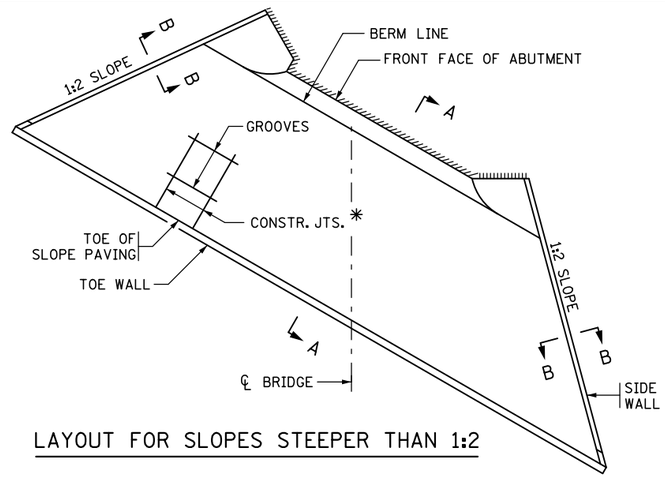

LAYOUT FOR SLOPES STEEPER THAN 1:2

△ 2'-0" FOR TANGENT BRIDGE SUPERSTRUCTURES. VARIES 2'-0" MINIMUM FOR CURVED BRIDGE SUPERSTRUCTURE.

✱ VERTICAL CONSTRUCTION JOINTS MAY BE CONSTRUCTED PARALLEL TO ℄ OF BRIDGE FOR SKEWS TO 10° ONLY.

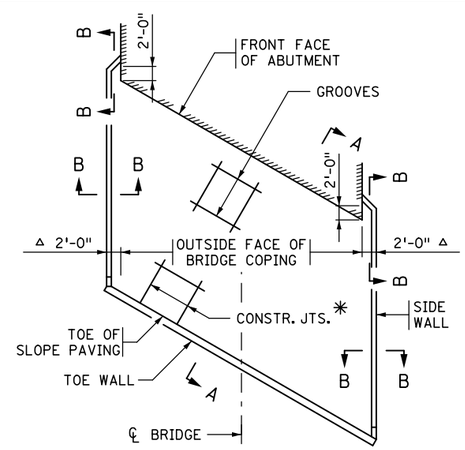

LAYOUT FOR SLOPES AT ABUTMENTS WITH 8' OR GREATER EXPOSURE

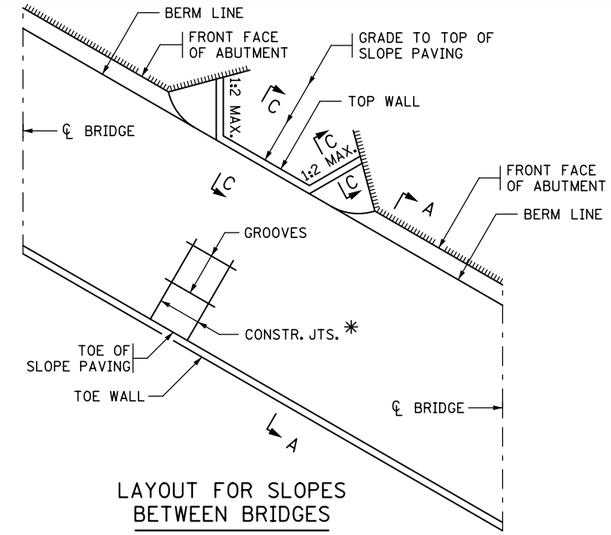

LAYOUT FOR SLOPES BETWEEN BRIDGES

TEXT IN ITALICS ARE DESIGNER NOTES. REMOVE PRIOR TO PLOTTING FINAL PLAN.

FOR INTEGRAL OR SEMI-INTEGRAL ABUTMENTS WITH RUSTICATION, MODIFY THE POLYSTYRENE THICKNESS IN DETAIL "A" TO 2".

FOR SLOPES OF 1:6 OR FLATTER THE TOE WALL AND SIDE WALLS SHOULD BE FLUSH WITH THE TOP OF THE SLOPE PAVING IMMEDIATELY ADJACENT TO ROADWAY SHOULDER TO PREVENT DAMAGE FROM SNOW PLOWS. VERIFY WITH MAINTENANCE PERSONNEL.

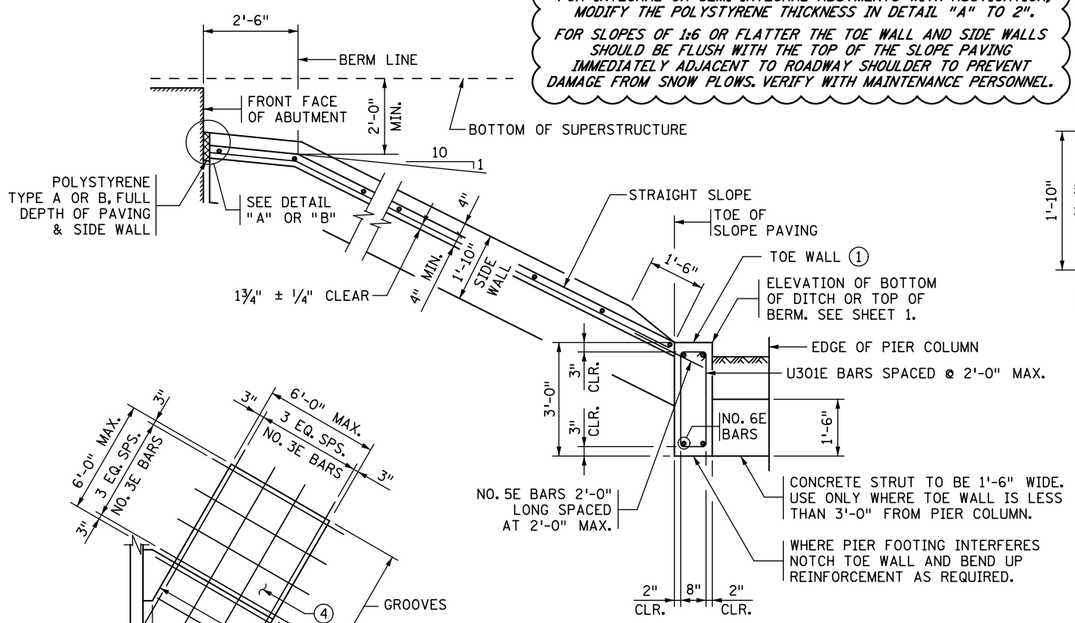

SECTION A-A

1:2 SLOPE SHOWN

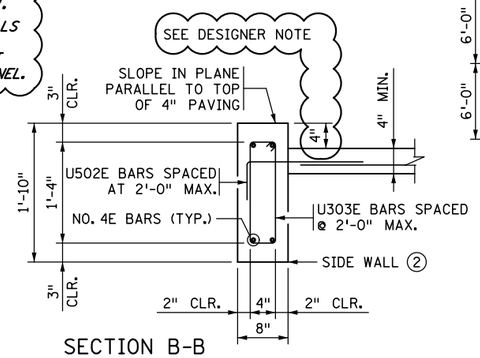

SECTION B-B

NORMAL TO SLOPE

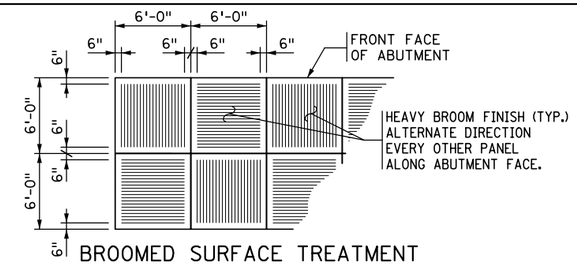

BROOMED SURFACE TREATMENT

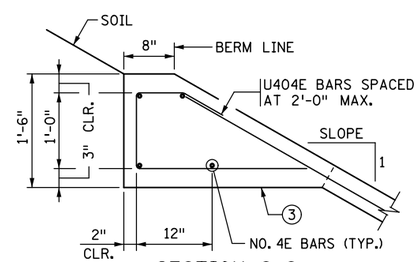

SECTION C-C

CONCRETE & REINFORCEMENT UNIT QUANTITIES

① 0.111 CU. YD. OF CONCRETE/LIN. FT.
8.55 LBS. OF REINFORCEMENT/LIN FT.

② 0.046 CU. YD. OF CONCRETE/LIN. FT.
4.08 LBS. OF REINFORCEMENT/LIN FT.

③ 0.116 CU. YD. OF CONCRETE/LIN. FT.
5.62 LBS. OF REINFORCEMENT/LIN FT.
BASED ON A SLOPE OF 1:2.

④ 0.111 CU. YD. OF CONCRETE/SQ. YD.
9.02 LBS. OF REINFORCEMENT/SQ. YD.

GENERAL NOTE

SLOPES ARE EXPRESSED AS A RATIO OF VERTICAL DISTANCE: HORIZONTAL DISTANCE.

SLOPE PAVING PER SPEC. 2514.

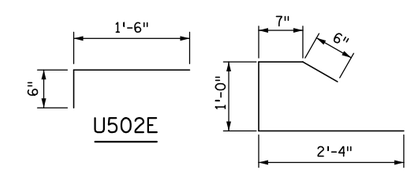

U502E

U404E

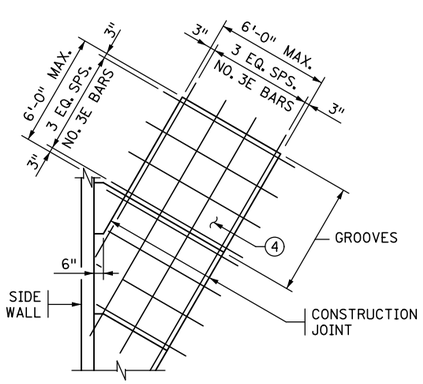

PAVING DETAIL

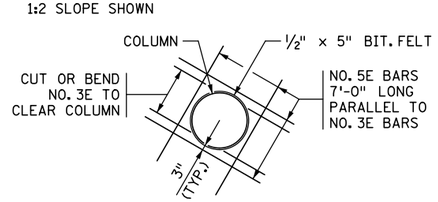

DETAIL WHERE PIER COLUMN EXTENDS THROUGH SLOPE PAVING

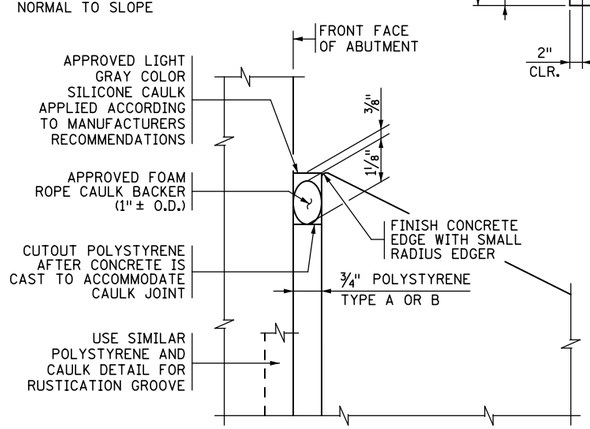

DETAIL "A"

ABUTMENTS WITH RUSTICATION

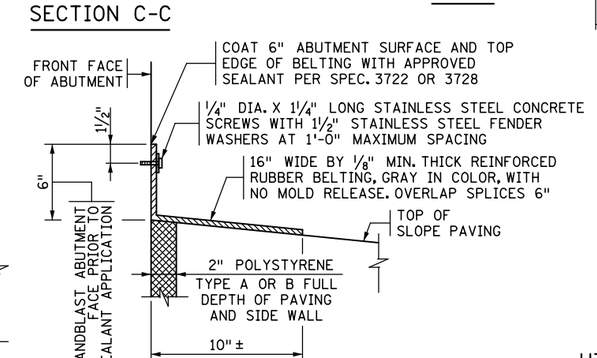

DETAIL "B"

ABUTMENTS WITHOUT RUSTICATION

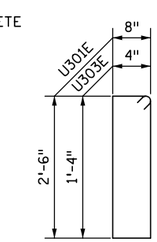

U301E & U303E

REVISION: 05-25-2016

APPROVED: SEPTEMBER 26, 2003

STATE BRIDGE ENGINEER

CERTIFIED BY _____ LICENSED PROFESSIONAL ENGINEER _____ DATE

NAME: LIC. NO.

TITLE: CONCRETE SLOPE PAVING UNDER BRIDGES

DES:	DR:	APPROVED:	FIG. 5-397.301
CHK:	CHK:		BRIDGE NO.
SHEET NO. OF SHEETS			