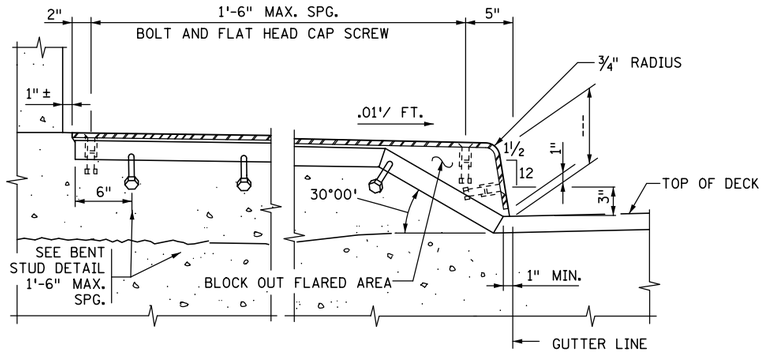

SECTION THROUGH RAISED SIDEWALK - OPTION 1

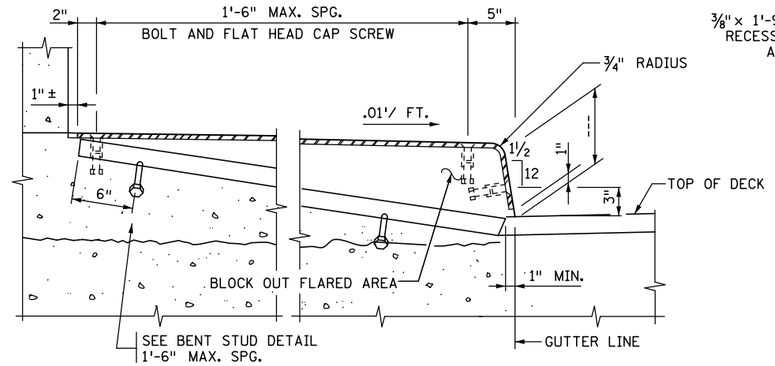

SECTION THROUGH RAISED SIDEWALK - OPTION 2

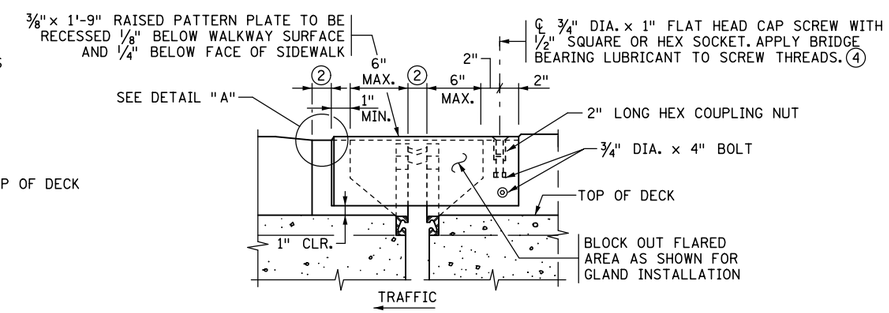

ELEVATION

RAISED SIDEWALK DETAILS

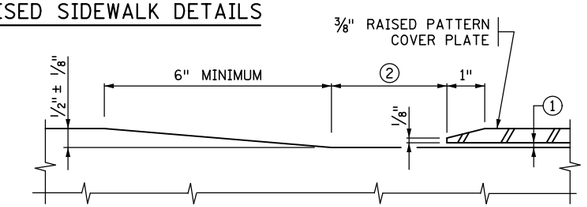

DETAIL "A" 3

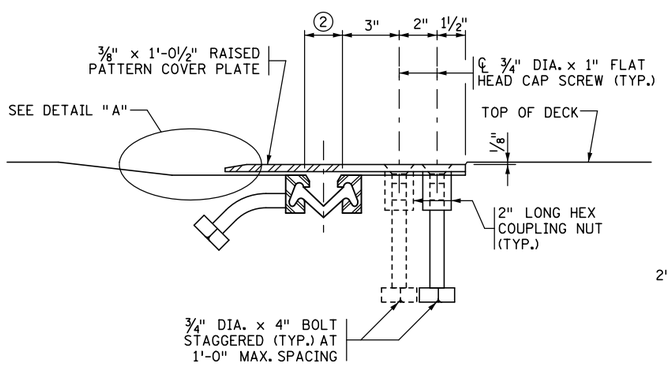

SECTION D-D 3

(INTEGRAL SIDEWALK)

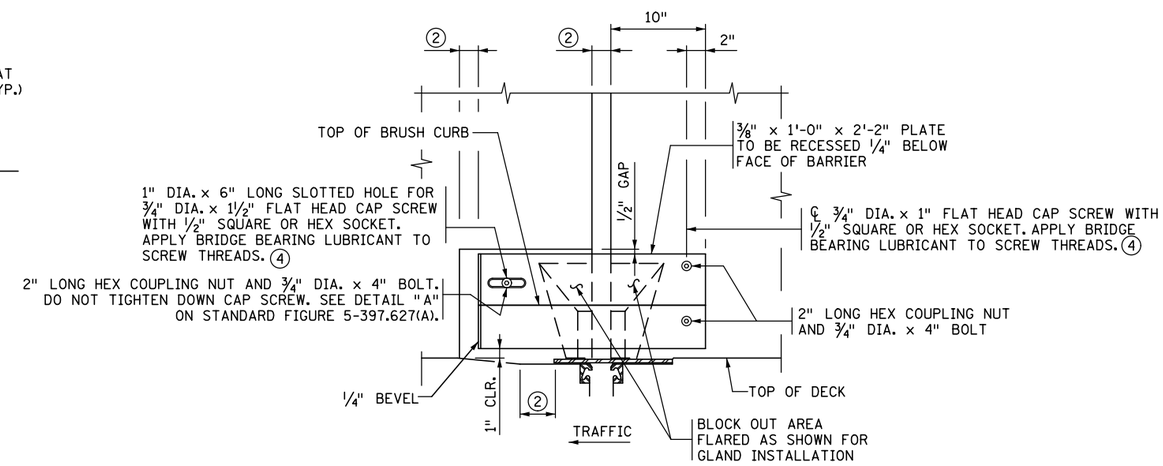

ELEVATION

(CONCRETE PARAPET AND BACK OF TYPE F BARRIER)

GENERAL NOTES

SEE STANDARD FIGURE 5-397.627(A) FOR ADDITIONAL DETAILS AND NOTES.

TRANSVERSE DECK REINFORCEMENT MAY BE SHIFTED THE MINIMUM DISTANCE REQUIRED FOR EXPANSION DEVICE PLACEMENT.

3/4" DIA. X 1 " FLATHEAD CAP SCREW WITH 1/2" SQUARE OR HEX SOCKET PER SPEC 3391. COUNTERSINK CAP SCREWS 1/16" BELOW TOP OF PLATE. APPLY BRIDGE BEARING LUBRICANT PER MnDOT APPROVED PRODUCTS LIST TO SCREW THREADS. 4

1 PROVIDE SMOOTH CONCRETE FINISH BENEATH PLATE WITH 0" MIN. TO 1/8" MAX. GAP BETWEEN CONCRETE AND UNDERSIDE OF PLATE. PROVIDE BOND BREAKER (DUCT TAPE, ETC.) TO UNDERSIDE OF COVER PLATE.

2 SEE NOTE 2 ON STANDARD FIGURE 5-397.627(A).

3 DIMENSIONS SHOWN ARE REQUIRED TO COMPLY WITH A.D.A. STANDARDS.

4 LUBRICANT PER MnDOT APPROVED/QUALIFIED PRODUCTS LIST: BRIDGE GREASE.

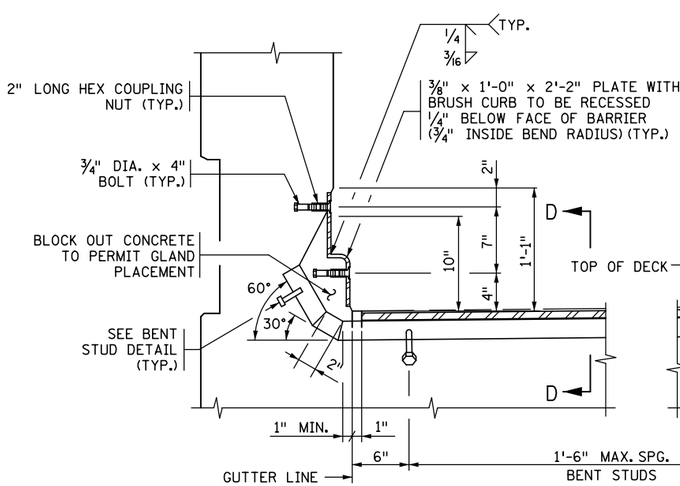

CONCRETE PARAPET BARRIER

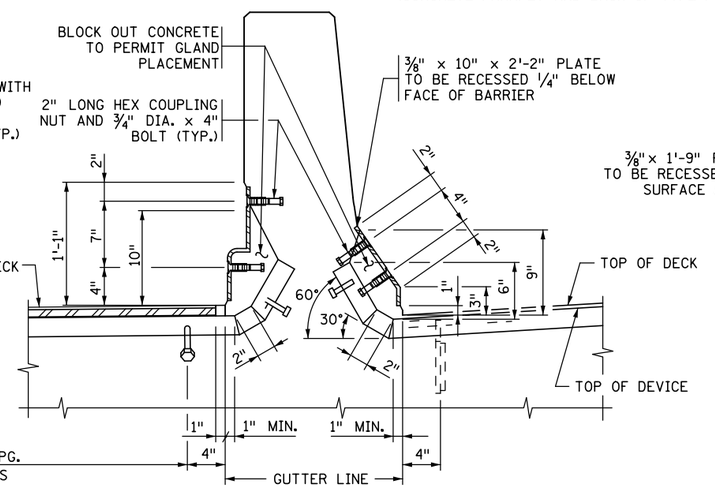

TYPE F BARRIER

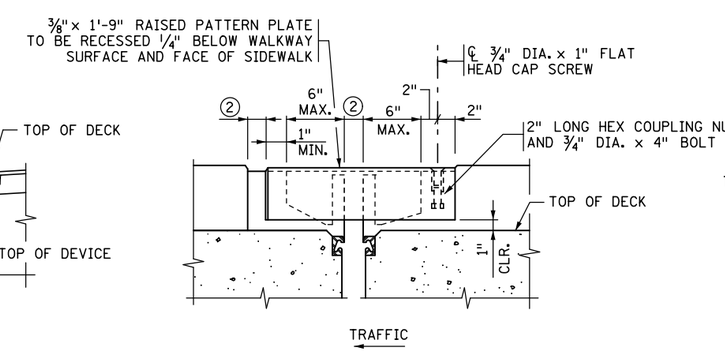

MEDIAN ELEVATION

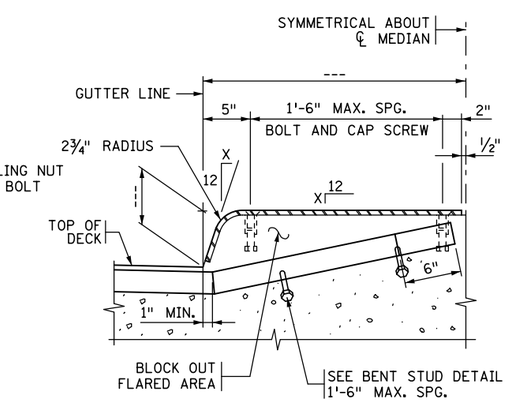

MEDIAN SECTION

SECTION THROUGH BARRIERS - INTEGRAL SIDEWALK

REVISION:

APPROVED: AUGUST 24, 2016

Kevin Western

STATE BRIDGE ENGINEER

CERTIFIED BY _____ LICENSED PROFESSIONAL ENGINEER _____ DATE

NAME: LIC. NO.

TITLE: WATERPROOF EXPANSION DEVICE (RAISED MEDIAN OR SIDEWALK WITH F BARRIER AND PARAPET)

DES: DR: CHK: CHK:

SHEET NO. OF SHEETS

APPROVED:

FIG. 5-397.630(A)

BRIDGE NO.