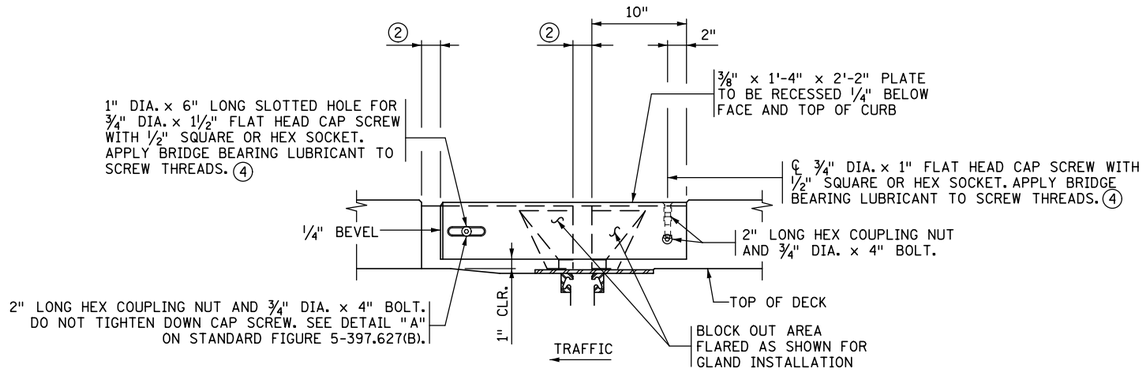


INSIDE ELEVATION OF CONCRETE CURB

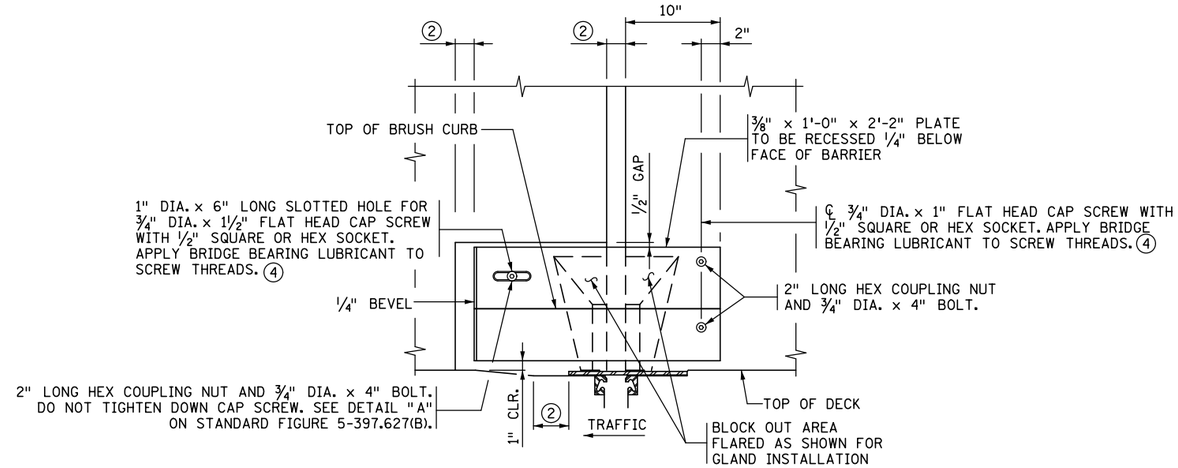


OUTSIDE ELEVATION OF S BARRIER

(BACK OF TYPE S BARRIER)

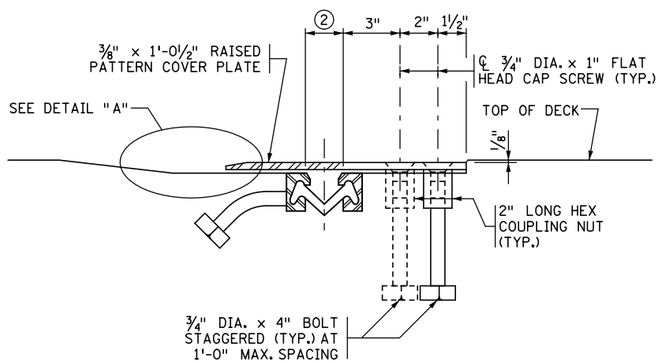


SECTION D-D 3

(INTEGRAL SIDEWALK)

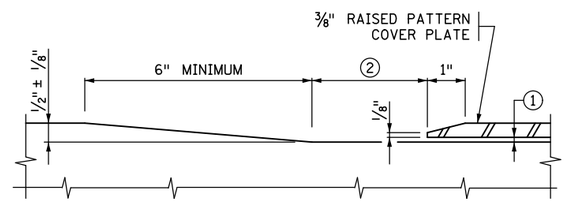


DETAIL "A" 3

## GENERAL NOTES

SEE STANDARD FIGURE 5-397.627(B) FOR ADDITIONAL DETAILS AND NOTES.

TRANSVERSE DECK REINFORCEMENT MAY BE SHIFTED THE MINIMUM DISTANCE REQUIRED FOR EXPANSION DEVICE PLACEMENT.

3/4" DIA. X 1" FLAT HEAD CAP SCREW WITH 1/2" SQUARE OR HEX SOCKET PER SPEC 3391. COUNTERSINK CAP SCREWS 1/16" BELOW TOP OF PLATE. APPLY BRIDGE BEARING LUBRICANT TO SCREW THREADS. 4

1 PROVIDE SMOOTH CONCRETE FINISH BENEATH PLATE WITH 0" MIN. TO 1/8" MAX. GAP BETWEEN CONCRETE AND UNDERSIDE OF PLATE. PROVIDE BOND BREAKER (DUCT TAPE, ETC.) TO UNDERSIDE OF COVER PLATE.

2 SEE NOTE 2 ON STANDARD FIGURE 5-397.627(B).

3 DIMENSIONS SHOWN ARE REQUIRED TO COMPLY WITH A.D.A. STANDARDS.

4 LUBRICANT PER MnDOT APPROVED/QUALIFIED PRODUCTS LIST: BRIDGE GREASE.

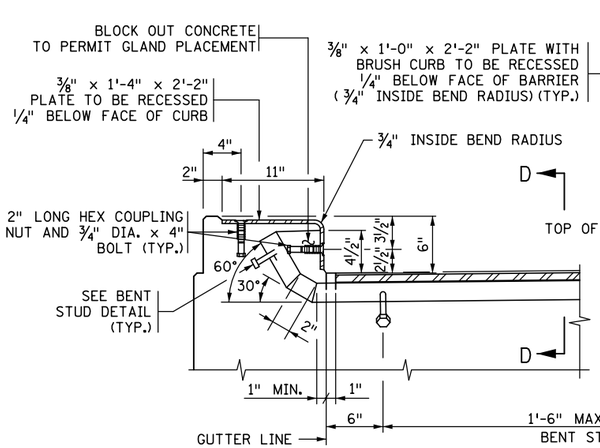


CONCRETE CURB

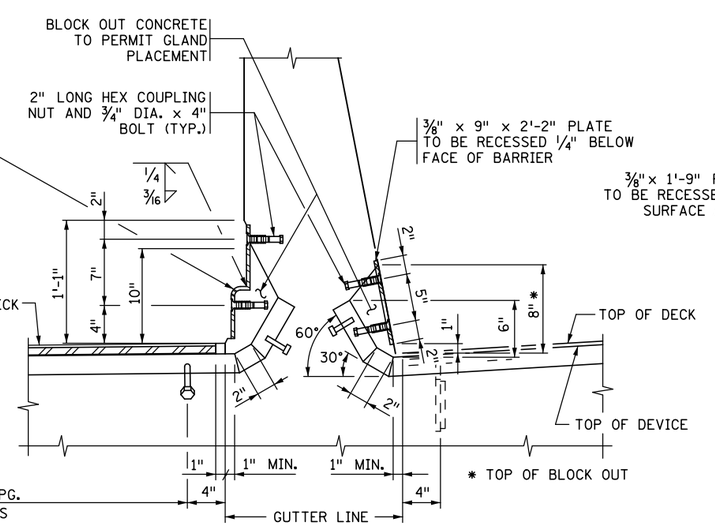


TYPE S BARRIER

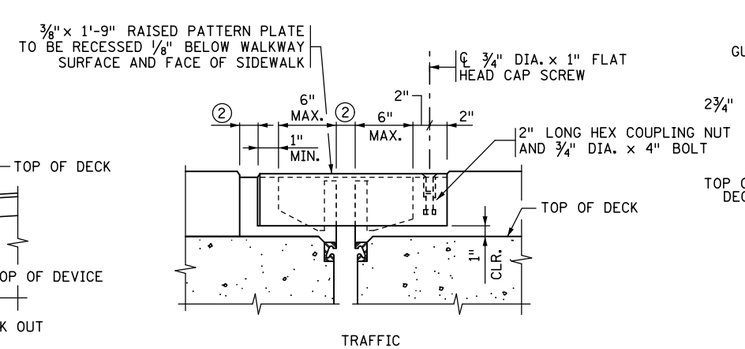


MEDIAN ELEVATION

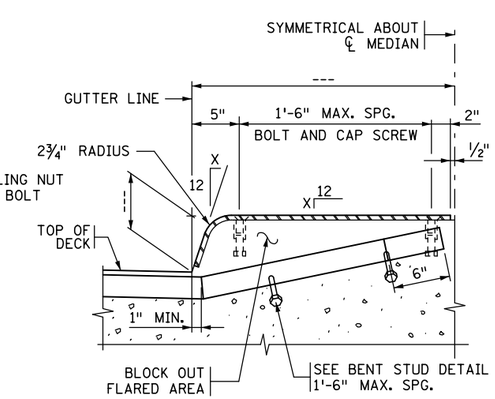


MEDIAN SECTION

SECTION THROUGH BARRIER AND CURB - INTEGRAL SIDEWALK

| | | | | |
|---|---|---|---|---|
| REVISION: | CERTIFIED BY _____ LICENSED PROFESSIONAL ENGINEER DATE | TITLE: WATERPROOF EXPANSION DEVICE (RAISED MEDIAN OR INTEGRAL SIDEWALK WITH S BARRIER AND CURB) | DES: DR: CHK: CHK: | FIG. 5-397.632(B) |
| APPROVED: AUGUST 24, 2016 Kevin Western STATE BRIDGE ENGINEER | NAME: LIC. NO. | | SHEET NO. OF SHEETS | APPROVED: BRIDGE NO. |