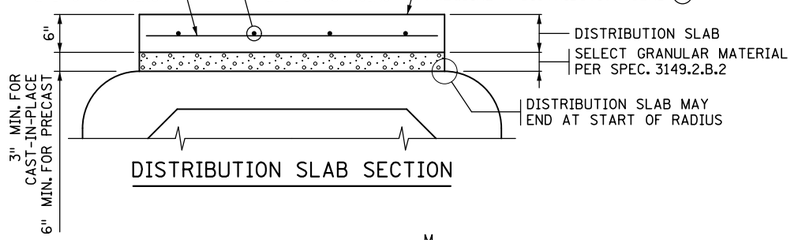

DISTRIBUTION SLAB SECTION

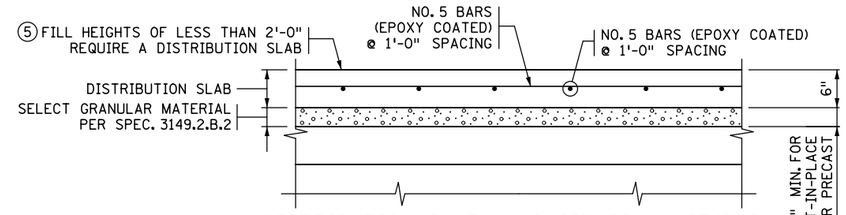

DISTRIBUTION SLAB - LONGITUDINAL SECTION

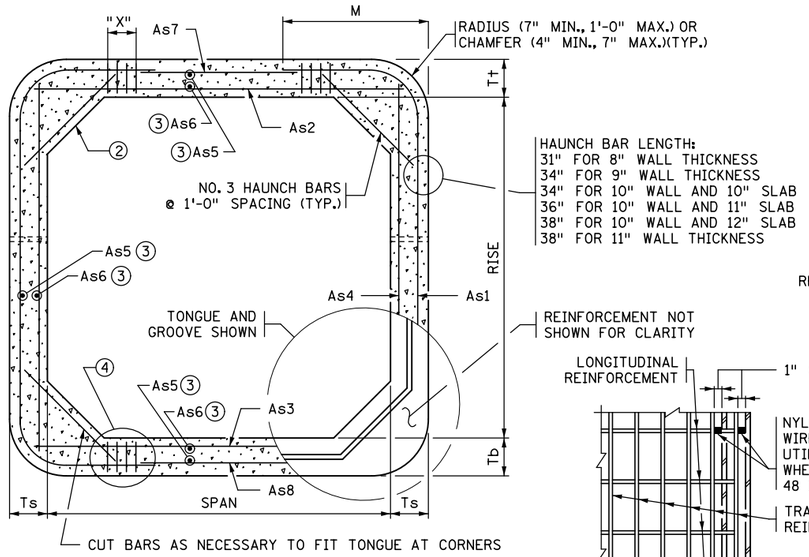

TRANSVERSE BARREL SECTION

BAR REINFORCEMENT OPTION SHOWN

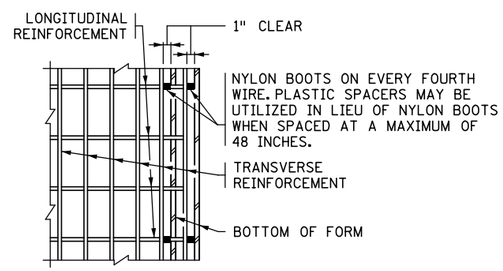

PLAN

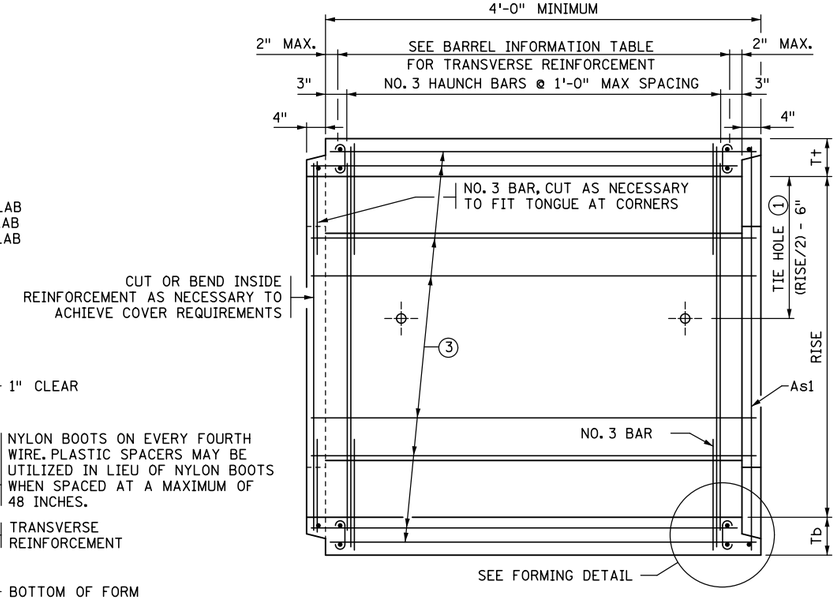

LONGITUDINAL BARREL SECTION

BAR REINFORCEMENT OPTION SHOWN

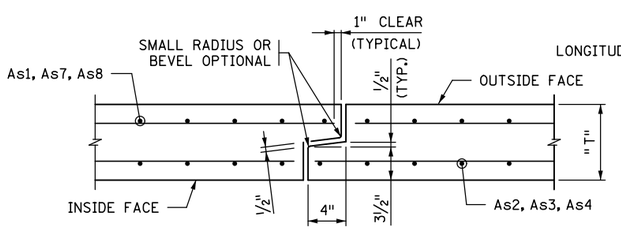

TONGUE AND GROOVE JOINT DETAIL

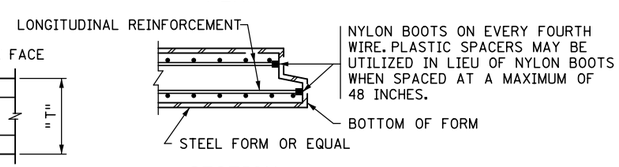

SECTION

FORMING DETAIL

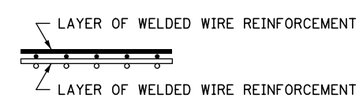

REINFORCEMENT LAYER DETAIL

WHEN MORE THAN ONE LAYER OF WELDED WIRE REINFORCEMENT IS USED TO OBTAIN THE REQUIRED REINFORCEMENT AREAS, PLACE THE WIRES OF THE WELDED WIRE REINFORCEMENT AS SHOWN

CONSTRUCTION NOTES

CONSTRUCT CULVERTS PER SPEC. 2412 EXCEPT AS NOTED.

REFER TO THE GENERAL PLAN AND ELEVATION SHEET FOR THE DISTANCE BETWEEN BARRELS OF ADJACENT BOXES AND TO STANDARD FIGURE 5-395.115 FOR MATERIAL REQUIREMENTS FOR FILL BETWEEN ADJACENT BOXES.

PROVIDE WELDED WIRE REINFORCEMENT, SHEAR REINFORCEMENT AND REINFORCEMENT BARS PER THE APPLICABLE REQUIREMENTS OF AASHTO M259.

1½" MIN. AND 2" MAX. CONCRETE COVER ON ALL REINFORCEMENT, INCLUDING SHEAR REINFORCEMENT, EXCEPT FOR TONGUE AND GROOVE DETAIL.

ANY OF THE FOLLOWING COMBINATIONS OF STEEL REINFORCEMENT MAY BE USED:
(a) 1 OR 2 LAYERS OF WELDED WIRE REINFORCEMENT OR
(b) 1 LAYER OF WELDED WIRE REINFORCEMENT AND 1 LAYER OF REINFORCEMENT BARS OR
(c) 1 LAYER OF REINFORCEMENT BARS.
DEVELOP REINFORCEMENT IN ACCORDANCE WITH AASHTO "LRFD BRIDGE DESIGN SPECIFICATIONS". IF BAR REINFORCEMENT IS SUBSTITUTED FOR WELDED WIRE REINFORCEMENT, INCREASE THE AREA OF REINFORCEMENT BY 8%, AND SUBMIT DESIGN CALCULATIONS VERIFYING COMPLIANCE WITH AASHTO 5.7.3.4. "CONTROL OF CRACKING BY DISTRIBUTION OF REINFORCEMENT".

MAXIMUM SIZE OF REINFORCEMENT BARS IS NO. 6. THE MAXIMUM WELDED WIRE REINFORCEMENT SIZE IS W23 PER LAYER (MAXIMUM OF 2 LAYERS).

SPACE CENTER TO CENTER OF TRANSVERSE WIRES NOT LESS THAN 2" NOR MORE THAN 4". SPACE CENTER TO CENTER OF LONGITUDINAL WIRES NOT MORE THAN 8".

WELDING IS NOT PERMITTED ON REINFORCEMENT BARS OR WELDED WIRE REINFORCEMENT, EXCEPT THAT THE ORIGINAL WELDING REQUIRED TO MANUFACTURE WIRE REINFORCEMENT IS ACCEPTABLE.

WHEN REINFORCEMENT IS CUT, PLACE ADDITIONAL REINFORCEMENT ON BOTH SIDES OF THE CUT MEMBER TO REPLACE OR EXCEED THE CUT STEEL.

USE CONCRETE MIX NO. 3W82 WITH NO CALCIUM CHLORIDE ALLOWED.

PROVIDE SHOP DRAWING APPROVAL PER SPEC. 3238.2.A.

COMPACT THE FIRST 1.5' (LOOSE) OF FILL ABOVE THE BOX WITH LIGHT COMPACTION EQUIPMENT SUCH AS PLATE COMPACTORS OR WALK BEHIND ROLLERS.

TRANSVERSE REINFORCEMENT IS PARALLEL TO THE CULVERT SPAN.
LONGITUDINAL REINFORCEMENT IS PERPENDICULAR TO THE CULVERT SPAN.

(1) USE 1" DIAMETER CULVERT TIES. SEE STANDARD PLATE NO. 3145 FOR CONNECTION DETAILS.

(2) USE 12" VERTICAL, 12" HORIZONTAL HAUNCHES ON ALL BOX SIZES.

(3) PLACE LONGITUDINAL REINFORCEMENT DENOTED AS As5 AND As6 IN ALL SLABS AND WALLS WITH A MINIMUM OF 0.06 SQ. IN./FT.

(4) SEE STANDARD PLATE NO. 3007 FOR SHEAR REINFORCEMENT OPTIONS. THE MAXIMUM SHEAR REINFORCEMENT SPACING IN THE LONGITUDINAL DIRECTION IS 6".

(5) ROADWAY OR SHOULDER FILL HEIGHTS OF LESS THAN 2'-0" REQUIRE A DISTRIBUTION SLAB.

USE CONCRETE MIX 3S52 FOR THE DISTRIBUTION SLAB.

PLACE 6" THICK CAST-IN-PLACE DISTRIBUTION SLABS. PROVIDE 3" MINIMUM SELECT GRANULAR MATERIAL PER SPEC. 3149.2.B.2 BETWEEN BARREL AND DISTRIBUTION SLAB.

6" THICK PRECAST DISTRIBUTION SLABS MAY BE USED FOR FILL HEIGHTS OVER 1'-0". PROVIDE 6" MINIMUM SELECT GRANULAR MATERIAL PER SPEC. 3149.2.B.2 BETWEEN BARREL AND DISTRIBUTION SLAB.

EXTEND THE WIDTH OF THE DISTRIBUTION SLAB TO THE OUTSIDE EDGES OF THE ROADWAY SHOULDERS UNLESS DIRECTED BY THE ENGINEER.

PAYMENT FOR THE DISTRIBUTION SLAB AND SELECT GRANULAR MATERIAL BENEATH THE SLAB IS CONSIDERED INCIDENTAL.

REDESIGN THE DISTRIBUTION SLAB PER THE MnDOT PAVEMENT DESIGN MANUAL IF IT IS USED AS PAVEMENT SURFACE.

BARREL INFORMATION TABLE ✳✳✳

LOCATION	SIZE	f'c (P.S.I.)	OVERFILL LIMITS (FT.)	DISTRIBUTION SLAB REQUIRED ✳	RECESSED TIE RODS REQUIRED ✳✳	DIMENSIONS					WEIGHT (LBS./FT.)	WELDED WIRE REINFORCEMENT														(4) SHEAR REINFORCEMENT TOP AND BOTTOM OF BARREL		
												As1			As2		As3		As4		As7		As8				
						SPAN (FT.)	RISE (FT.)	Tt (IN.)	Tb (IN.)	Ts (IN.)		AREA (IN.²/FT.)	LENGTH (FT.)	M (FT.)	AREA (IN.²/FT.)	LENGTH (FT.)	AREA (IN.²/FT.)	LENGTH (FT.)	AREA (IN.²/FT.)	LENGTH (FT.)	AREA (IN.²/FT.)	LENGTH (FT.)	AREA (IN.²/FT.)	LENGTH (FT.)	AREA (IN.²/FT.)	MAX. SPG. (IN.)	X (IN.)
				YES	NO																						
				YES	NO																						

✳ ALL CLASS 1 CULVERTS WITH FILL HEIGHTS OF LESS THAN 2'-0" REQUIRE A DISTRIBUTION SLAB. IF A DISTRIBUTION SLAB IS NOT REQUIRED, INDICATE "NO" IN THIS BOX.

✳✳ FOR PEDESTRIAN CULVERT APPLICATIONS HIDE-AWAY OR RECESSED TIE CONNECTIONS ARE REQUIRED, SEE STANDARD PLATE 3145. IF REQUIRED, INDICATE "YES" IN THIS BOX.

✳✳✳ BOX CULVERTS WITH SPANS FROM 6 TO 14 FT. ARE DESIGNED FOR HL-93 LIVE LOADS (AASHTO LRFD 3.6.2.1) NOT INCLUDING THE DESIGN LANE LOAD. BOXES WITH SPANS OF 16 FT. ARE DESIGNED FOR HL-93 LIVE LOADS INCLUDING THE DESIGN LANE LOAD.

REVISION: 10-09-2015

APPROVED: MARCH 24, 2011

Nancy Daubenberger
STATE BRIDGE ENGINEER

STATE PROJ. NO - (T.H.) STA. + .

FIG. 5-395.101(B)

CERTIFIED BY _____ LICENSED PROFESSIONAL ENGINEER _____ DATE

NAME: LIC. NO.

TITLE: PRECAST CONCRETE BARREL DETAILS (SPECIAL DESIGN)

DES: DR: APPROVED:

CHK: CHK:

SHEET NO. OF SHEETS

BRIDGE NO.