Minnesota Department of Transportation

Bridge Office
Mail Stop 610
3485 Hadley Avenue North
Oakdale, MN 55128-3307

Phone No: 651/366-4500
Fax No: 651/366-4497

July 7, 2016

DISTRIBUTION: MnDOT Bridge Office Web Site			
TRANSMITTAL NOTICE (2016-02)		**ISSUED BY**	Bridge Office
MANUAL	LRFD Bridge Design Manual	**DEVELOPED BY**	Bridge Office
SUBJECT	Title Page Table of Contents Section 11: Abutments, Walls, and Piers		

The MnDOT Bridge Office *LRFD Bridge Design Manual* is available for download in *Adobe* PDF (Portable Document Format) at http://www.dot.state.mn.us/bridge/. This Web site should be checked regularly for updates.

INSTRUCTIONS:
(for two-sided printing)

1. Remove from the manual:
   - Title Page
   - Table of Contents pages vii through xii
   - Entire Section 11
   - Bridge Designer Memo #2007-01

2. Print and insert in the manual:
   - Title Page
   - Table of Contents pages vii through xii
   - Section 11

Note: Due to the numerous changes, Section 11 is being republished in its entirety. The "JULY 2016" update includes the following revisions:

- Revised abutment, retaining wall, and pier design examples.
- Addition of updated pier protection policy to Section 11 and removal of outdated designer memo regarding pier protection policy.
- Revisions to design and detailing guidance for abutments, wingwalls, retaining walls, and piers.

Any ***technical questions*** regarding this transmittal should be directed to Dave Dahlberg, Bridge Design Manual and Policy Engineer, at dave.dahlberg@state.mn.us or 651/366-4491.

Kevin Western

Kevin Western
State Bridge Engineer

MANUAL

5-392

MINNESOTA DEPARTMENT OF TRANSPORTATION

Bridge Office

LRFD Bridge Design Manual

MnDOT BRIDGE OFFICE

LRFD Bridge Design Manual

Minnesota Department of Transportation
3485 Hadley Avenue North • Mail Stop 610
Oakdale, MN 55128-3307
Phone: 651/366-4500 • Fax: 651/366-4497

JULY 2003 OCTOBER 2003 JANUARY 2004 APRIL 2004 OCTOBER 2004 DECEMBER 2004
FEBRUARY 2005 MARCH 2005 NOVEMBER 2005 MARCH 2006 APRIL 2006 MAY 2006
AUGUST 2006 OCTOBER 2006 FEBRUARY 2007 JUNE 2007 JULY 2007 OCTOBER 2007
APRIL 2008 MAY 2008 JUNE 2008 AUGUST 2008 SEPTEMBER 2008 OCTOBER 2008
APRIL 2009 MAY 2009 OCTOBER 2009 MARCH 2010 JUNE 2010 DECEMBER 2010 JUNE 2011
SEPTEMBER 2011 OCTOBER 2011 DECEMBER 2011 APRIL 2012 NOVEMBER 2012 APRIL 2013
SEPTEMBER 2013 FEBRUARY 2014 JULY 2014 AUGUST 2014 DECEMBER 2014 MAY 2015
JUNE 2015 AUGUST 2015 MAY 2016 JULY 2016

8.2.3 Longitudinal Wood Decks 8-8
8.2.4 Design/Analysis 8-11
8.2.5 Detailing 8-12
8.3 Timber Bridge Superstructures 8-13
8.3.1 Camber/Deflections 8-13
8.4 Timber Pile Caps/Substructures 8-14
8.4.1 Substructure Details 8-14
8.4.2 Geometry 8-14
8.4.3 Design/Analysis 8-15
8.4.4 Camber/Deflections 8-15
8.5 Railings 8-15
8.6 Additional References 8-16
8.7 Design Examples 8-16
8.7.1 Longitudinally Spike Laminated Timber Deck Design Example 8-17
8.7.2 Timber Pile Cap Design Example 8-39
8.7.3 Glulam Beam Superstructure Design Example 8-51
8.7.4 Transverse Deck Design Examples 8-73
8.8 Load Rating Examples 8-103
8.8.1 Longitudinal Spike Laminated Timber Deck Rating Example 8-105
8.8.2 Glulam Beam Superstructure Rating Example 8-107
8.8.3 Transverse Deck Rating Examples 8-113

9. DECKS AND DECK SYSTEMS 9-1
9.1 General 9-1
9.1.1 Deck Drainage 9-2
9.2 Concrete Deck on Beams 9-2
9.2.1 Deck Design and Detailing 9-4
9.3 Reinforced Concrete Deck Design Example 9-19

10. FOUNDATIONS 10-1
10.1 Determination of Foundation Type and Capacity 10-1
10.1.1 Foundation Report 10-1
10.1.2 Foundation Recommendations 10-

10.2 Piles 10-3
10.3 Drilled Shafts 10-7
10.4 Footings 10-10
10.4.1 General 10-10
10.4.2 Footings Supported on Piling or Drilled Shafts 10-11
10.4.3 Spread Footings 10-15
10.5 Pile Bent Piers and Integral Abutments 10-15
10.6 Evaluation of Existing Pile Foundations when Exposed by Scour 10-16
10.7 Structure Excavation and Backfill 10-17
10.8 Appendix 10-A: Sample Bridge Construction Unit Recommendations . 10-19

11. ABUTMENTS, PIERS, AND WALLS 11-1
11.1 Abutments 11-1
11.1.1 Integral Abutments 11-5
11.1.2 Semi-Integral Abutments 11-18
11.1.3 Parapet Abutments 11-24
11.1.3.1 Low Abutments 11-26
11.1.3.2 High Abutments 11-26
11.1.3.3 Parapet Abutments Behind MSE Walls 11-26
11.1.4 Wingwalls 11-29
11.1.4.1 Wingwall Geometry 11-29
11.1.4.2 Wingwall Design 11-31
11.1.5 Bridge Approach Panels 11-33
11.1.6 Bridge Approach Treatment 11-34
11.2 Piers 11-34
11.2.1 Geometrics 11-34
11.2.2 Pier Design and Reinforcement 11-36
11.2.2.1 Pile Bent Piers 11-37
11.2.2.2 Cap and Column Type Piers 11-39
11.2.3 Pier Protection 11-41
11.2.3.1 Protection From Vessel Collision 11-41
11.2.3.2 Protection From Vehicle & Train Collision 11-41
11.2.3.2.1 Pier Protection for New Bridges Over Roadways 11-42

11.2.3.2.2 Pier Protection for New Bridges Over Railways..... 11-43
11.2.3.2.3 Pier Protection for Existing Bridges Over Roadways. 11-44
11.2.3.2.4 Crash Struts for Pier Protection From Vehicle Collision 11-45
11.2.3.2.5 Barrier Protection of Piers..... 11-50
11.3 Retaining Walls..... 11-52
11.3.1 Cantilever Retaining Walls 11-52
11.3.2 Counterfort Retaining Walls 11-53
11.3.3 Anchored Walls..... 11-53
11.3.4 Prefabricated Modular Block Walls 11-54
11.3.5 Mechanically Stabilized Earth Walls..... 11-54
11.3.6 Noise Barriers..... 11-56
11.3.7 Cantilevered Sheet Pile Walls..... 11-58
11.4 Design Examples 11-60
11.4.1 High Parapet Abutment Design Example..... 11-61
11.4.2 Retaining Wall Design Example 11-99
11.4.3 Three-Column Pier Design Example 11-137

12. BURIED STRUCTURES..... 12-1
12.1 Geotechnical Properties 12-1
12.2 Box Culverts 12-2
12.2.1 Precast Concrete Box Culverts 12-2
12.2.2 Cast-In-Place Concrete Box Culverts..... 12-3
12.2.3 Design Guidance for Box Culverts..... 12-3
12.3 Arched & Three-Sided Structures 12-17
12.3.1 Three-Sided Precast Concrete Structures..... 12-17
12.3.2 Precast Concrete Arch Structures 12-18
12.3.3 Scour Protection Guidelines 12-20
12.4 Use of Long-Span Corrugated Steel Structures..... 12-25
12.5 10' x 10' Precast Concrete Box Culvert Design Example..... 12-27
12.6 16' x 12' Precast Concrete Box Culvert Live Load Distr. Example..... 12-51

13. RAILINGS 13-1
13.1 Materials 13-1
13.2 Design Requirements 13-1
13.2.1 Traffic Railing 13-9
13.2.2 Pedestrian/Bicycle Railing 13-11
13.2.3 Combination Railing 13-11
13.2.4 Strength of Standard Concrete Barriers 13-12
13.2.5 Protective Screening 13-15
13.2.6 Architectural/Ornamental Railings 13-15
13.3 Design Examples 13-16
13.3.1 Type F Barrier Design Example 13-17
13.3.2 Adhesive Anchor Design Example 13-31

14. JOINTS AND BEARINGS 14-1
14.1 Bridge Movements and Fixity 14-1
14.2 Expansion Joints 14-1
14.2.1 Thermal Movements 14-2
14.2.2 Strip Seal Expansion Joints 14-2
14.2.3 Modular Expansion Joints 14-3
14.2.4 Expansion Joint Detailing 14-3
14.3 Bearings 14-4
14.3.1 Loads and Movements 14-5
14.3.2 Bearing Details 14-5
14.3.3 Elastomeric Bearings 14-6
14.3.3.1 Design 14-6
14.3.3.1.1 Size and Stability 14-7
14.3.3.2 Fixed Bearings 14-7
14.3.3.3 Expansion Bearings 14-8
14.3.3.3.1 Minimum Compressive Load 14-8
14.3.4 Pot Bearings 14-9
14.3.5 Other Types of Bearings 14-10
14.4 Curved Plate Design 14-10
14.5 Bearing Plate Design 14-11

14.6 Sole Plate Design (Steel Beams) 14-12
14.7 Tables 14-12
14.8 Design Examples 14-20
14.8.1 Fixed Elastomeric Bearing Design Example 14-21
14.8.2 Expansion Elastomeric Bearing Design Example..... 14-29

15. BRIDGE LOAD RATING 15-1
15.1 General 15-1
15.2 Analysis 15-3
15.2.1 Computer Programs 15-3
15.2.2 Refined Analysis 15-3
15.3 Loads..... 15-4
15.4 Rating Equation Factors..... 15-6
15.5 Rating New Bridges..... 15-6
15.6 Re-rating Existing Bridges..... 15-6
15.7 Substructures 15-7
15.8 Non-Standard Bridge Types 15-8
15.9 Timber Bridges..... 15-8
15.10 Culverts ..... 15-9.
15.11 Gusset Plates 15-11
15.12 Load Testing 15-11
15.13 Load Posting 15-11
15.13.1 General 15-11
15.13.2 Rating Factors for Posting 15-14
15.14 Overweight Permits..... 15-15
15.15 Physical Inspection Rating (PIR) 15-16
15.16 Forms and Documentation 15-17
15.17 Submittal / Filing 15-19
APPENDIX 15-A: GLOSSARY..... 15-20
APPENDIX 15-B: RATING FORMS 15-24
APPENDIX 15-C: OVERWEIGHT PERMIT RESTRICTIONS FOR BRIDGES..... 15-25
APPENDIX 15-D: MINNESOTA LEGAL (POSTING) LOADS 15-26.1
APPENDIX 15-E: MINNESOTA STANDARD PERMIT TRUCKS G-80 15-27

APPENDIX 15-F: MINNESOTA STANDARD PERMIT TRUCKS G-07 15-28

APPENDIX A. MEMOS

#2005-01 REMOVED
#2005-02 Discontinue Use of Cast Bearing Option .....(dated November 9, 2005)
#2005-03 New MN45 and MN54 PCB .....(dated November 10, 2005)
#2006-01 New MN63 PCB..... (dated May 31, 2006)
#2007-01 REMOVED
#2007-02 Adhesive Anchors Under Sustained Tensile Loads.....(dated Oct. 3, 2007)
#2007-03 REMOVED
#2008-01 Prestressed Concrete Design – Calculation of Prestress Losses and Beam Camber & Deflection.....(dated Sept. 18, 2008)
#2008-02 Truss Bridge Gusset Plate Analysis ..... (dated Oct. 20, 2008)
#2011-01 REMOVED
#2011-02 Barrier Placement on Bridge Decks and Approach Panels and Taper Rate for Concrete Barrier Transitions .....(dated September 14, 2011)
#2011-03 Interim Guidance for Installation of Temporary Barriers on Bridges and Approach Panels.....(dated December 23, 2011)
#2012-01 Discontinued Usage of Plain Elastomeric Bearing Pads and Substitution with Cotton-Duck Bearing Pads .....(dated April 12, 2012)
#2012-02 Transition to New MnDOT Pile Formula 2012 (MPF12).....(dated November 21, 2012)
#2013-01 Conversion from Metric to U.S. Cust. Rebar Designations .....(dated April 17, 2013)
#2014-01 AASHTO LRFD Article 5.7.3.4 Concrete Crack Control Check (dated August 6, 2014)
#2014-02 Inclusion of Informational Quantities in Bridge Plans (dated December 23, 2014)
#2015-01 Concrete Mix Design Designations ..... (dated August 10, 2015)

11. ABUTMENTS, PIERS, AND WALLS

This section contains guidance for the design and detailing of abutments, piers, retaining walls, and noise walls. Abutments and piers are used to support bridge superstructures, whereas walls primarily function as earth retaining structures. In most cases, abutments, piers, and walls are reinforced concrete elements.

The preferred details for connecting the superstructure to the substructure are dependent on the geometry and type of bridge. For example, flexible substructure units supported by a single line of piles may be constructed integral with the superstructure. Conversely, stiff substructure units are detailed with expansion bearings between the superstructure and substructure to reduce the design loads in the substructure units.

11.1 Abutments

General

Abutments function as both earth retaining structures and as vertical load carrying components. Integral and semi-integral abutments are designed to accommodate movements at the roadway end of the approach panel. Parapet abutments are detailed to accommodate movements with strip seal or modular expansion joint devices between the concrete deck and the abutment end block.

Railroad bridge abutments shall be designed according to the *AREMA Manual for Railway Engineering*, *Volume 2*, for the live load specified by the railroad. Design all other abutments according to the *AASHTO LRFD Bridge Design Specifications*. The Duluth Mesabe & Iron Range Railway requires a special live load. The live load surcharge is found by taking the axle load and distributing it over an area equal to axle spacing multiplied by the track spacing, generally 70 square feet. Do not reduce the surcharge loading for skew.

Refer to Article 2.4.1.6.2 when locating utilities near an abutment. When footings are perched on an embankment, consult with the Regional Construction Engineer regarding the use of spread footings.

Abutment Type Selection

Integral abutments are the preferred type of abutment when all of the following criteria are met:

- The bridge length and skew meet one of the following: (See Figure 11.1.1)
    - Bridge length ≤ 300 feet and skew ≤ 20 degrees
    - Bridge length ≤ 100 feet and skew ≤ 45 degrees
    - Bridge length is between 100 feet and 300 feet, and

skew ≤ [45 - 0.125 (L - 100)] degrees, where L is the length of the bridge in feet.

- Bridge horizontal alignment is straight. Slight curvature can be allowed, but must be considered on a case-by-case basis.
- The length of wingwall cantilevers are ≤ 14 feet (measured from the back face of abutment to the end of the wingwall).
- Abutment wingwalls do not tie into roadway retaining walls.
- Bridge configuration allows setting the abutment front face exposure on the low side of the bridge at 2 feet.
- Maximum abutment stem height ≤ 7'-0"
- Depth of beams is ≤ 72 inches.

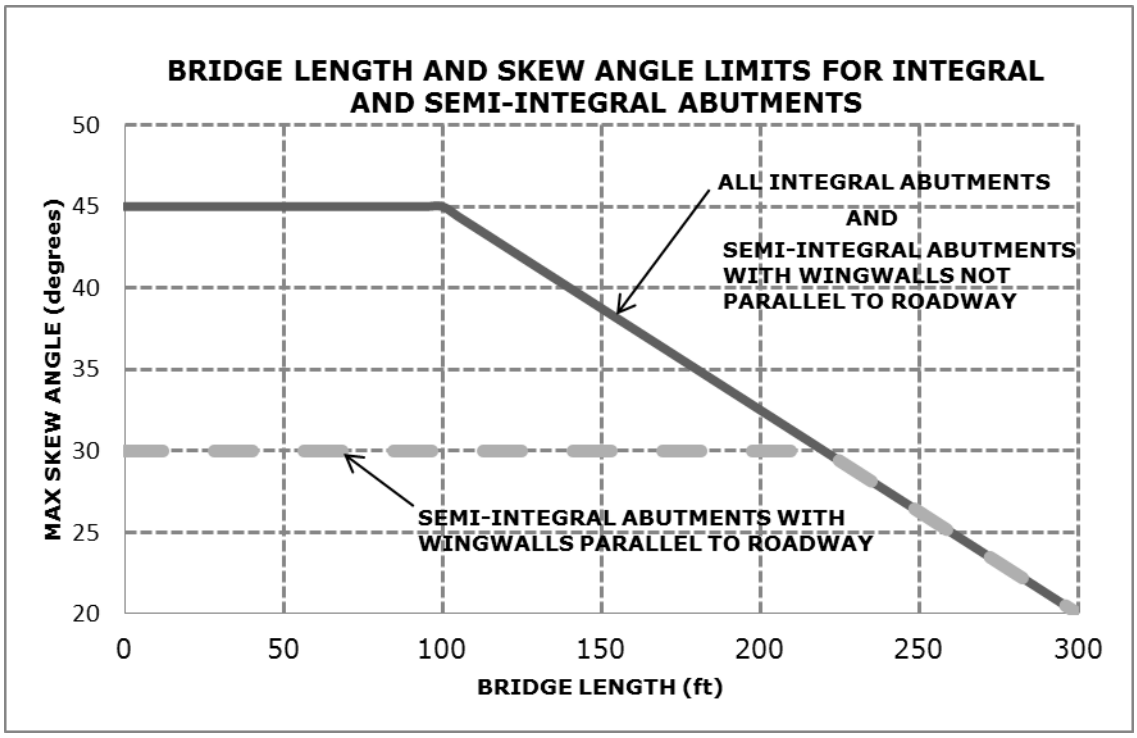

Figure 11.1.1

Semi-integral abutments are the preferred type of abutment when the following circumstances apply:

- The wingwall length, abutment exposure or superstructure depth requirements for integral abutments cannot be met.
- The bridge length and skew meet the requirements given above for integral abutments, except that when wingwalls are parallel to the roadway, the maximum skew limit for semi-integral abutments is 30 degrees. (See Figure 11.1.1.) Also, note that a guide lug is required for skews greater than 30 degrees to limit unwanted lateral movement.

Parapet abutments should only be considered where integral and semi-integral abutment criteria cannot be met.

A parapet abutment supported by a pile foundation can be used behind a mechanically stabilized earth (MSE) retaining wall where high abutments would be required and where it is economical to use an MSE wall. Locate the front face of the MSE wall a minimum of 6′-0″ from the centerline of bearing. Do not batter the piles. Place the bottom of the abutment footing and the bottom of the MSE wall cap at the same elevation. Slope protection between the abutment and the MSE wall cap should not exceed a 1V:4H slope.

Detailing/Reinforcement

For bridge rail sections that extend beyond the bridge ends and connect to guardrail, it is preferable to locate them on top of the approach panel rather than on top of the wingwall. However, for situations where the wingwalls tie into roadway retaining walls, be aware that this will result in an offset between the wingwall and roadway retaining wall. In this case, additional coordination with the roadway designer will be required.

Extend architectural rustications 2 feet below the top of finished ground.

As a minimum, tie abutment and wingwall dimensions to the working points by providing distances normal and parallel to the center line of bearing from working points to the following points:

- Centerline of piles at abutment footing corners
- Corners of abutment front face
- Corners of abutment fillets
- Wingwall ends at front and back face of wall

The gutter line, the edge of deck, and the centerline of the fascia beam should be illustrated and labeled in the corner details.

To facilitate plan reading, label the ends of the abutments in the details (South End, North End, etc.).

Label all construction joints and identify the nominal size of keyways.

Where conduit extends through an abutment, provide horizontal dimensions from a working point to the location where the conduit penetrates the front face of the abutment or the outside face of the wingwall. The elevation at mid-height of the conduit should also be provided.

For presentation clarity, detail abutments with complicated layouts on separate sheets. Identical abutments (except for minor elevation differences) should be detailed on common sheets.

The minimum depth for the paving bracket is 1'-4".

On footing details, dimension the lap splice length for bent dowel bars. For straight dowel bars, dimension the embedment or projection length.

If the railing contains a separate end post (supported on the abutment), show the end post anchorage reinforcement in the abutment details.

Membrane waterproofing (per Spec. 2481.3.B) shall be provided for construction joints, doweled cork joints, Detail B801 contraction joints, and on wall joints below ground. Waterproofing is not required at the top of parapet expansion block joints.

All reinforcement, except that completely encased in buried footings or otherwise indicated in this section, shall be epoxy coated. The minimum size for longitudinal bars in abutment and wingwall footings is #6.

Figure 11.1.2 illustrates cover and clearance requirements for abutments.

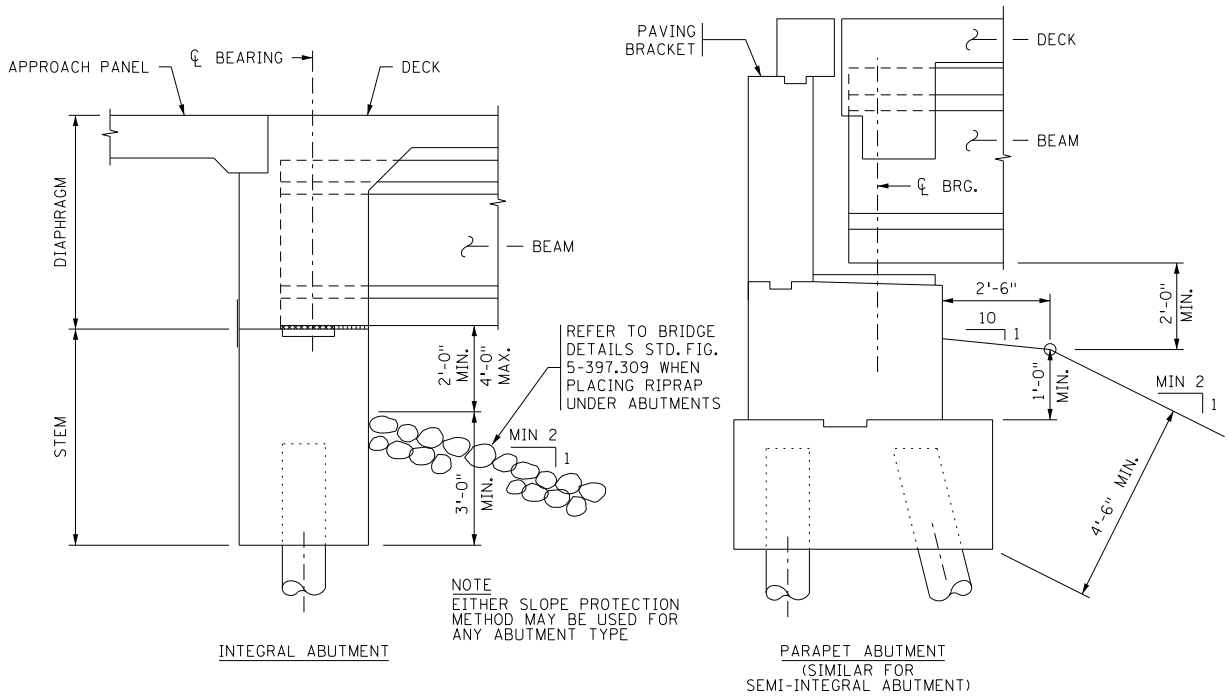

Figure 11.1.2
Cover and Clearance Requirements

For skewed abutments, acute angles are not allowed at corners where wingwalls intersect with the abutment stem. Instead, provide a 6 inch minimum chamfer or "square up" the corner to the wingwall at all acute angle corners.

Provide shrinkage and temperature reinforcement per Article 5.2.6.

Detail sidewalk paving brackets with the same width and elevation as the roadway paving bracket. Sidewalks are to be supported on abutment diaphragm or abutment backwalls and detailed to "float" along adjacent wingwalls.

For semi-integral and parapet abutments, avoid projections on the back of abutments that are less than 4'-6" below grade. If shallower projections are necessary, slope the bottom to minimize frost heave effects.

For additional guidance on reinforcement detailing, see the web published document, *Suggested Reinforcement Detailing Practices*, which can be found at http://www.dot.state.mn.us/bridge/standards.html.

11.1.1 Integral Abutments

An integral abutment consists of an abutment stem supported by a single line of piles. The superstructure girders or slab bear on the stem. An abutment diaphragm is poured with the deck and encases the girders. The diaphragm is connected to the stem, making the superstructure integral with the abutment. Figure 11.1.1.2 shows typical integral abutment cross-section details and reinforcement. Figure 11.1.1.3 shows typical partial elevation details and reinforcement. Figure 11.1.1.4 shows Section A-A through the partial elevation. The reinforcement in these figures is typical for an integral abutment design based on the **Integral Abutment Reinforcement Design Guide** found in this section. For abutments that do not meet the design guide criteria, these figures may not accurately reflect the final abutment design.

Geometry

Use a minimum thickness of 3 feet for the abutment stem. For skewed bridges, increase the abutment thickness to maintain a minimum of 5 inches between the beam end and the approach slab seat (See Figure 11.1.1.2). Set the abutment stem height to be as short as practical while meeting the embedment and exposure limits shown in Figure 11.1.2. The preferred abutment stem height on the low side of the bridge is 5 feet, with 3 feet below grade and 2 feet exposure. (Note that the 4'-6"

minimum depth below grade requirement for abutment footings does not apply to integral abutment stems.)

Orient H-piling such that weak axis bending occurs under longitudinal bridge movements. Limit the use of CIP piling to bridges 150 feet or less in length. Minimum pile penetration into abutment stem is 2'-6". Avoid using 16" CIP and HP 14 piles or larger because of limited flexibility.

When the angle between the back face of wingwall and back face of abutment is less than 135 degrees, provide a 2'-0" x 2'-0" corner fillet on the back face of the wingwall/abutment connection. Include the fillet along the height of the abutment stem only, stopping it at the top of the stem.

Wingwalls and the end diaphragm are intended to move as a single unit. Do not include a gap between wingwalls and the abutment diaphragm. Detail rebar to cross the joint between the diaphragm and the wingwalls.

Detail integral abutments with a drainage system (Detail B910). Outlet the 4 inch drains through wingwalls and backslopes.

Limit the length of the wingwall cantilever to 14 feet measured from the back face of abutment to the end of the wingwall.

Refer to Figure 11.1.1.1a and 11.1.1.1b regarding the following guidance on integral abutment permissible construction joints. Unless indicated otherwise on the preliminary plan, place a permissible horizontal construction joint in the wingwall at the elevation of the abutment stem/diaphragm interface, running the entire length of the wingwall. For abutments with wingwalls parallel to the roadway, include a permissible vertical construction joint that is an extension of the wingwall back face through the abutment diaphragm, running from the bridge seat to the top of the wingwall. For abutments with flared wingwalls, include a permissible vertical construction joint where the wingwall connects to the abutment fillet (if provided) or abutment stem, running from the bridge seat to the top of the wingwall. Show membrane waterproofing along the inside face of all construction joints. Inclusion of these permissible construction joints allows the contractor the option of casting the upper portion of the wingwall separately or with the diaphragm and deck. Note that the upper portion of the wingwall is always to be paid for as abutment concrete, even when it is placed with the diaphragm. These permissible construction joint options may be limited for aesthetic reasons by the Preliminary Bridge Plans Engineer based on guidance from

the Bridge Architectural Specialist. In those cases, acceptable construction joint locations are to be shown on the preliminary plan.

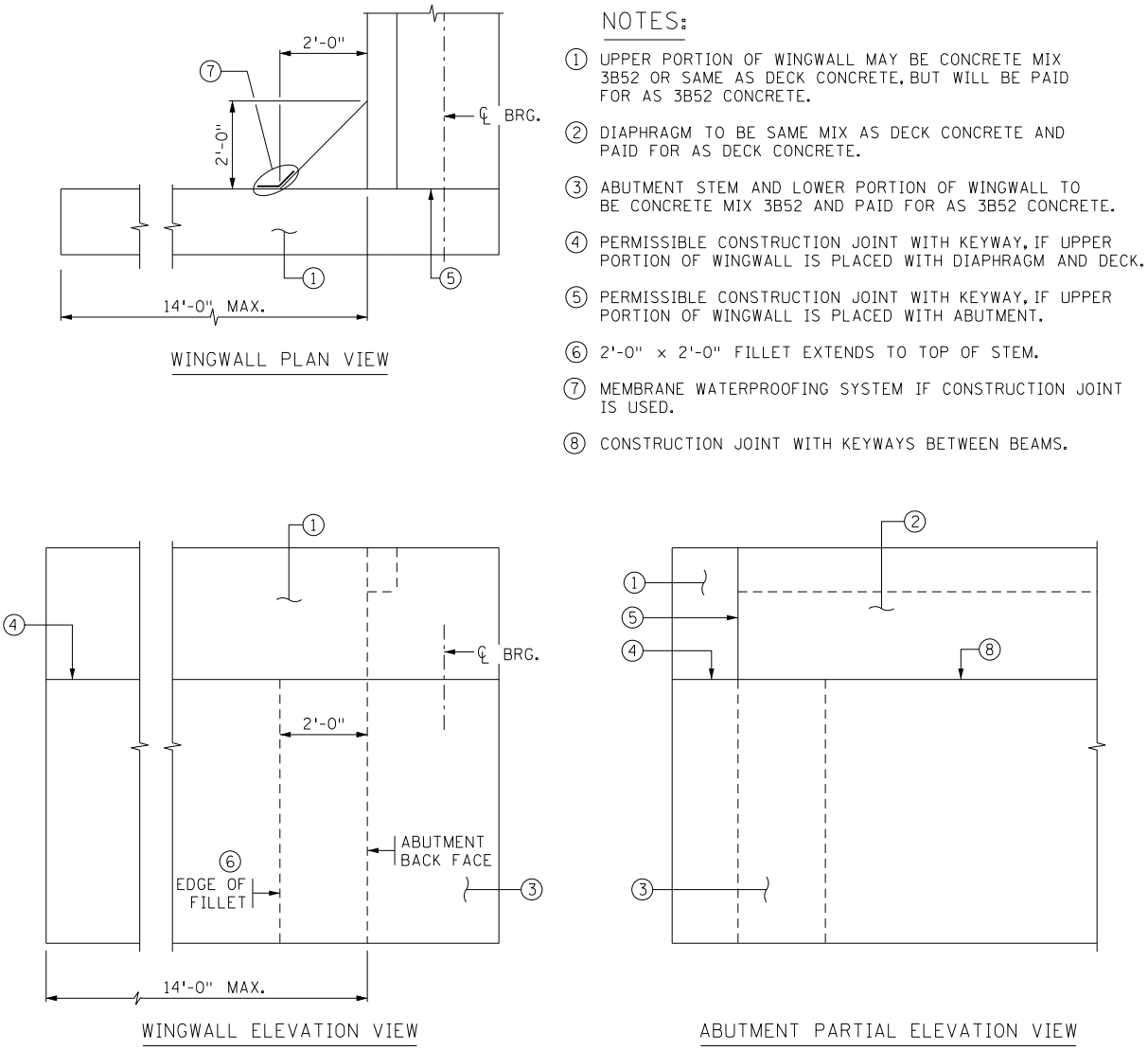

Figure 11.1.1.1a
Permissible Construction Joints For Integral Abutments With Wingwalls Parallel to Roadway

NOTES:

1. CONSTRUCTION JOINT AT TOP OF ABUTMENT STEM WITH KEYWAYS BETWEEN BEAMS.
2. PERMISSIBLE CONSTRUCTION JOINT WITH KEYWAY, IF UPPER PORTION OF WINGWALL IS PLACED WITH DIAPHRAGM AND DECK.
3. PERMISSIBLE CONSTRUCTION JOINT WITH KEYWAY (ABOVE ABUTMENT STEM), IF UPPER PORTION OF WINGWALL IS PLACED WITH ABUTMENT.
4. MEMBRANE WATERPROOFING SYSTEM IF CONSTRUCTION JOINT IS USED.

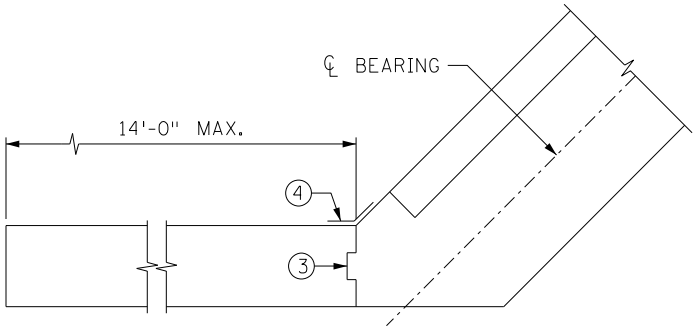

WINGWALL PLAN

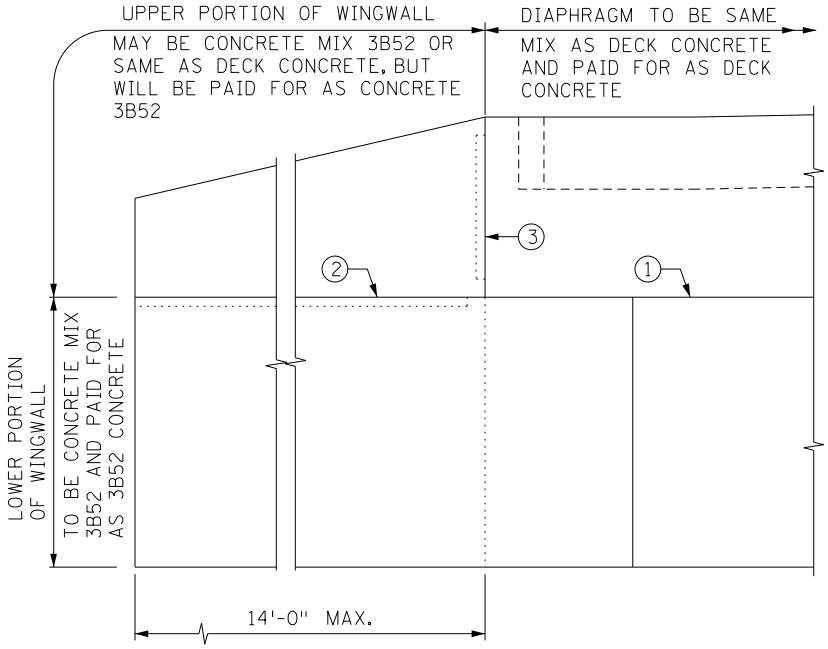

WINGWALL ELEVATION VIEW

Figure 11.1.1.1b
Permissible Construction Joints For Integral Abutments With Flared Wingwalls

For new bridges, tie the approach panel to the bridge with stainless steel dowel bars that extend at a 45 degree angle out of the diaphragm through the paving bracket seat and bend horizontally 6 inches below the top of the approach panel. (See bar S605S, Figure 11.1.1.2.) For repair projects, provide an epoxy coated dowel rather than stainless steel due to the shorter remaining life of the bridge. Include a ½ x 7 inch bituminous felt strip on the bottom of the paving bracket to allow rotation of the approach panel.

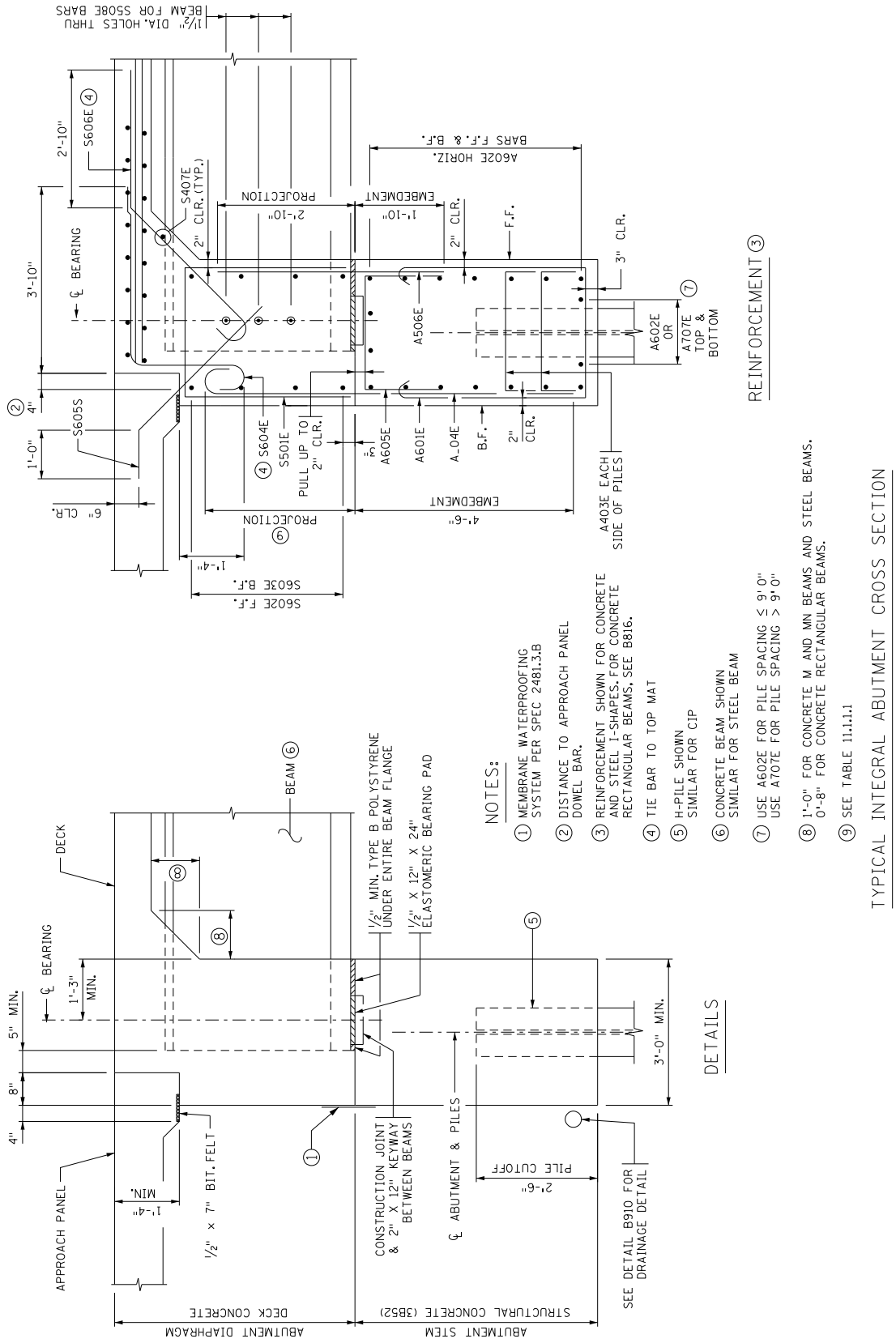

Figure 11.1.1.2

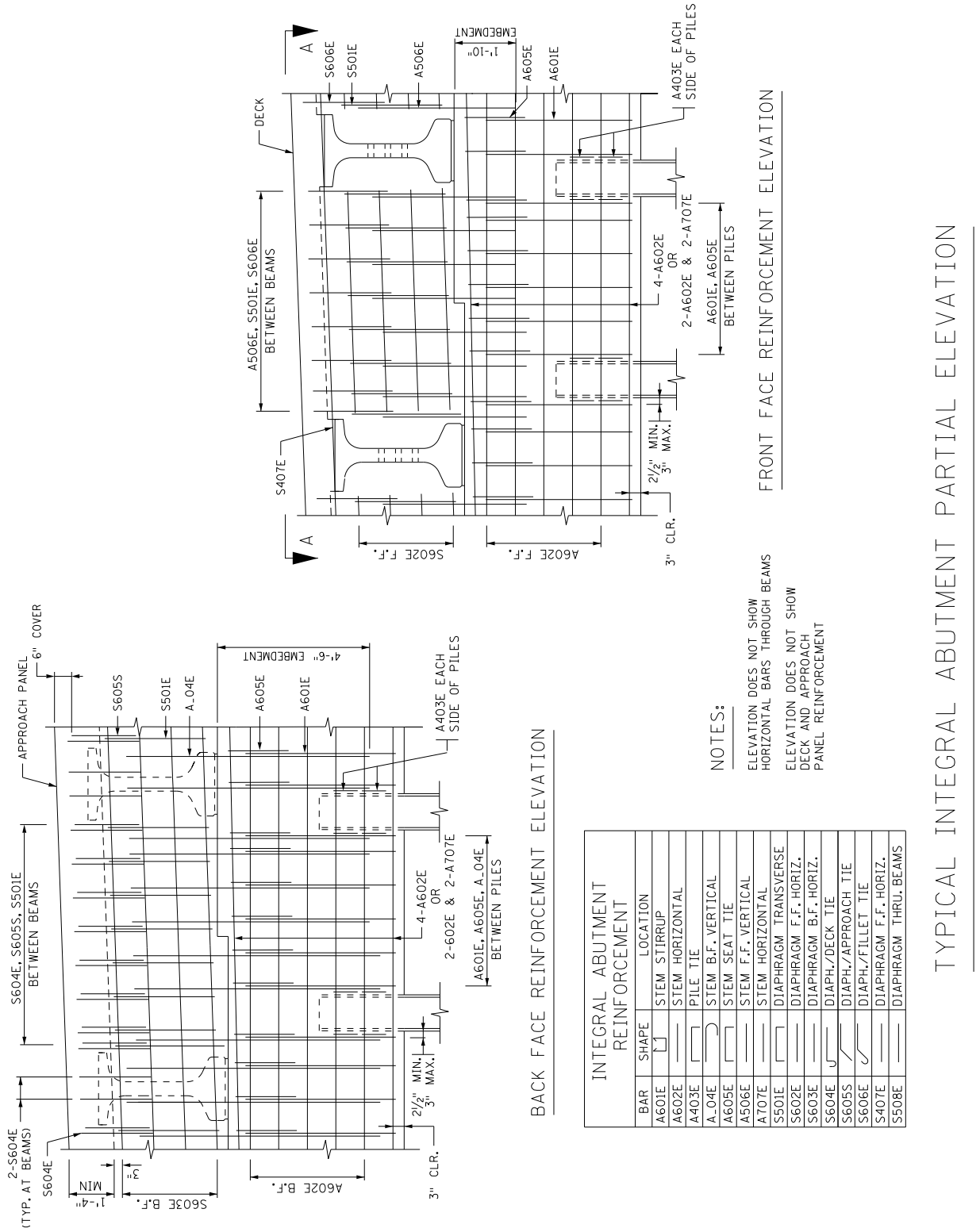

INTEGRAL ABUTMENT REINFORCEMENT

BAR	SHAPE	LOCATION
A601E		STEM STIRRUP
A602E		STEM HORIZONTAL
A403E		PILE TIE
A_04E		STEM B.F. VERTICAL
A605E		STEM SEAT TIE
A506E		STEM F.F. VERTICAL
A707E		STEM HORIZONTAL
S501E		DIAPHRAGM TRANSVERSE
S602E		DIAPHRAGM F.F. HORIZ.
S603E		DIAPHRAGM B.F. HORIZ.
S604E		DIAPH./DECK TIE
S605S		DIAPH./APPROACH TIE
S606E		DIAPH./FILLET TIE
S407E		DIAPHRAGM F.F. HORIZ.
S508E		DIAPHRAGM THRU. BEAMS

Figure 11.1.1.3

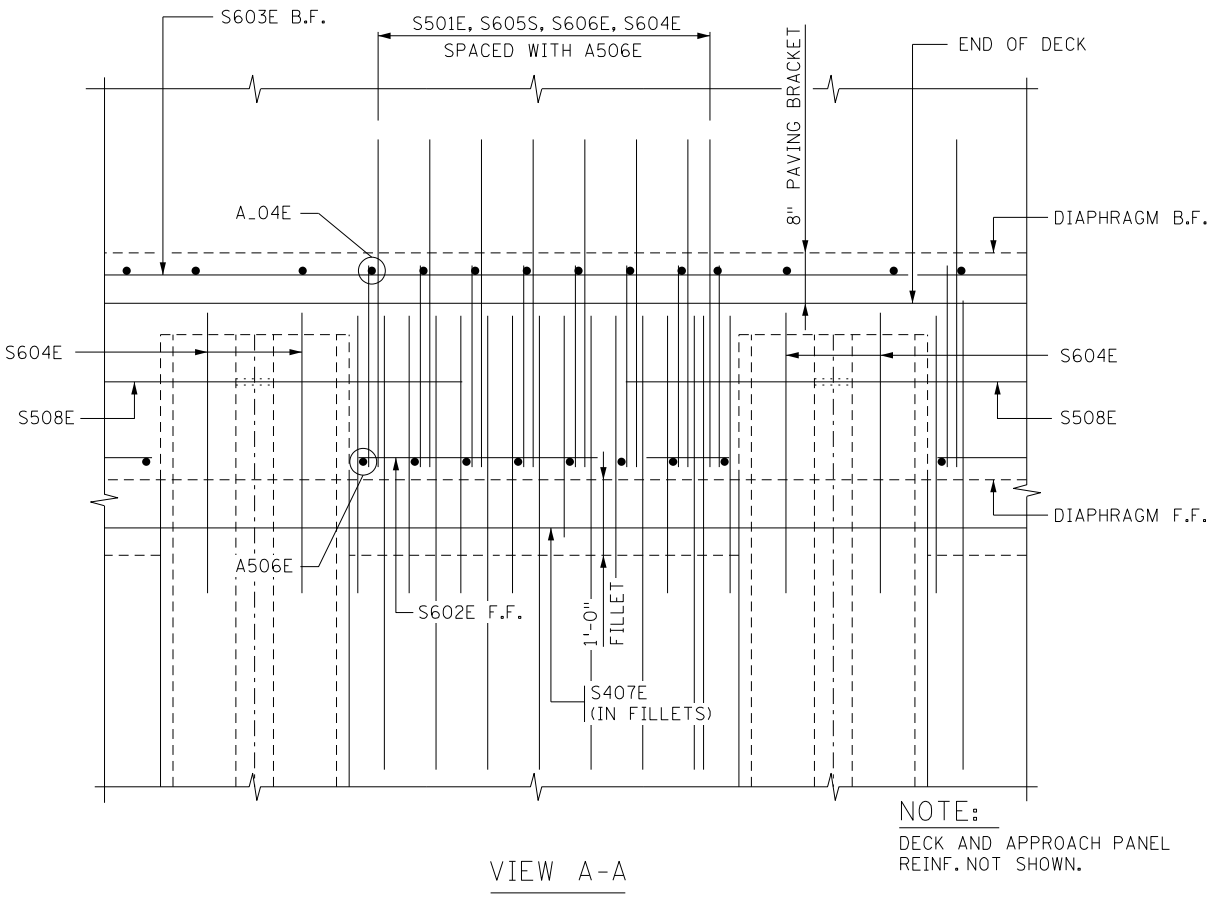

Figure 11.1.1.4

Integral Abutment Reinforcement Design Guide

Integral abutment reinforcement may be designed using the following guidance on beam and slab span bridges where all of the following criteria are met:

- All requirements of Articles 11.1 and 11.1.1 of this manual are met
- Beam height ≤ 72″
- Beam spacing ≤ 13′-0″
- Pile spacing ≤ 11′-0″
- Factored pile bearing resistance ϕR_n ≤ 165 tons
- Maximum abutment stem height ≤ 7′-0″
- Deck thickness plus stool height ≤ 15.5″

For beam heights that fall in between current MnDOT prestressed beam sizes (i.e. steel beams), use the values corresponding to the next largest beam height in the tables. Detail reinforcement using Figures 11.1.1.2 through 11.1.1.4.

For abutment stem shear reinforcement, use #6 bars spaced at a maximum of 12 inches between piles along the length of the abutment. These bars are designated A601E and A605E in Figures 11.1.1.2 and 11.1.1.3.

For abutment stem back face vertical dowels, select bar size, spacing and length from Table 11.1.1.1. Embed dowels 4 feet into the stem. These bars are designated A_04E in Figures 11.1.1.2 and 11.1.1.3. Where table shows a maximum spacing of 12", space A_04E dowels with the abutment stem shear reinforcement (A601E) between piles. Where table shows a maximum spacing of 6", space every other A_04E dowel with the abutment stem shear reinforcement (A601E) between piles.

Table 11.1.1.1 Abutment Stem Vertical Dowels (A_04E) Minimum Required Bar Size and Length

Beam Size (in)	Bar Size & Max Spacing	Bar Projection into Abutment Diaphragm
14	#5 @ 12"	8"
18	#6 @ 12"	1'-0"
22	#6 @ 12"	1'-4"
27	#6 @ 12"	1'-9"
36	#7 @ 12"	2'-6"
45	#7 @ 12"	3'-3"
54	#6 @ 6"	4'-0"
63	#6 @ 6"	4'-9"
72	#6 @ 6"	5'-6"

For abutment stem front face vertical dowels, use #5 bars spaced at a maximum of 12 inches between beams. These bars are designated A506E in Figures 11.1.1.2 through 11.1.1.4. Do not space with the other abutment stem reinforcement, but instead space with the abutment diaphragm transverse bars (S501E).

For abutment stem front and back face horizontal reinforcement, use #6 bars spaced at a maximum of 9 inches. These bars are designated A602E in Figures 11.1.1.2 and 11.1.1.3. Account for changes in abutment seat height by varying bar spacing or the number of bars.

For the abutment stem top and bottom longitudinal bars, use 4-#6 bars on the top and bottom faces of the stem for piles spaced at 9 feet or less. These bars are designated A602E in Figures 11.1.1.2 and 11.1.1.3. When pile spacing exceeds 9 feet, use #6 bars in the corners with two additional

#7 bars on the top and bottom faces of the stem. These bars are designated A602E and A707E in Figures 11.1.1.2 and 11.1.1.3.
Include 2-#4 pile ties on each side of each pile. These bars are designated A403E in Figures 11.1.1.2 and 11.1.1.3.

For abutment diaphragm transverse reinforcement, use #5 bars, which are designated S501E in Figures 11.1.1.2 through 11.1.1.4. Space them at a maximum of 12 inches between beams, matching the abutment stem front face vertical dowels (A506E).

For abutment diaphragm deck ties, approach panel ties and fillet ties, use #6 bars spaced at a maximum of 12 inches between beams to match the abutment stem front face vertical dowels. These bars are designated S604E, S605S and S606E, respectively in Figures 11.1.1.2 through 11.1.1.4. Additionally, place S604E and S605S bars outside the fascia beams to the end of the diaphragm. Do not place S606E fillet ties outside of the fascia beams. Place two additional S604E diaphragm deck ties at equal spaces at the end of each beam.

Provide 1-#4 horizontal bar in the fillet area of the abutment diaphragm that runs the width of the fillet. This bar is designated S407E in Figures 11.1.1.2 through 11.1.1.4.

For abutment diaphragm front face and back face horizontal reinforcement, use equally spaced #6 bars. These bars are designated S602E and S603E, respectively in Figures 11.1.1.2 through 11.1.1.4. Determine the number of bars using Table 11.1.1.2.

Table 11.1.1.2
Abutment Diaphragm Horizontal Bars (S602E & S603E)
Minimum Required Number of #6 Bars, Each Face

Beam Size (in)	Beam Spacing (feet)				
	≤ 9	10	11	12	13
14	2	2	2	2	2
18	2	2	2	2	2
22	2	2	2	2	2
27	3	3	3	3	3
36	3	3	3	3	4
45	4	4	4	4	5
54	5	5	5	5	6
63	6	6	6	7	7
72	7	7	7	8	9

For abutment diaphragms of concrete slab bridges, provide a minimum of two #6 bars in both the front face (S602E) and back face (S603E) with a maximum spacing of 12 inches.

For skews less than or equal to 20 degrees, place end diaphragm transverse bars (S501E), slab dowels (S606E), and approach panel dowels (S605S) perpendicular to the centerline of bearing. When skews exceed 20 degrees, place bars parallel to the working line.

For bridges on the local system, pinned connections between the abutment stem and diaphragm are allowed in instances where the material encountered in the soil borings for the bridge is very stable and abutment movement from slope instabilities is very unlikely. Pinned connections should be limited to concrete slab bridges with skews less than 30 degrees that have abutment stem exposure heights set at no greater than 2 feet at the low point. Provide #8 dowels at 1'-0" maximum spacing along the centerline of bearing, and a strip of 1" x 4" bituminous felt along the front edge of abutment stem and back edge of slab to allow rotation. See Figure 11.1.1.5. For all other cases, use a fixed connection similar to that shown in Figures 11.1.1.2 through 11.1.1.4.

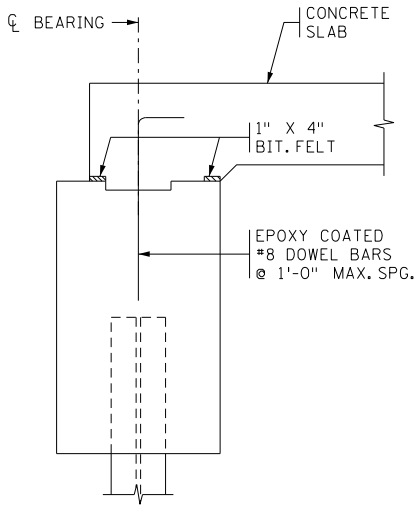

ABUTMENT CROSS SECTION WITH PINNED CONNECTION

(STEM & SLAB REINF. NOT SHOWN)

Figure 11.1.1.5

Integral Abutment General Design/Analysis Method

Design piling for axial loads only. Assume that one half of the approach panel load is carried by the abutment. Distribute live load over the entire length of abutment. Apply the number of lanes that will fit on the superstructure adjusted by the multiple presence factor. Use a minimum of four piles in an integral abutment.

For integral abutments that do not meet the **Integral Abutment Reinforcement Design Guide** criteria found in this section, use the methods outlined below to design the reinforcement.

Design vertical shear reinforcement in the abutment stem for the maximum factored shear due to the simple span girder reactions, including the dynamic load allowance of 33%. Consider the stem to act as a continuous beam with piles as supports.

Punching shear of the piles can be assumed to be satisfied and need not be checked.

Design abutment stem backface vertical dowels for the passive soil pressure that develops when the bridge expands. Assume the abutment stem acts as a cantilever fixed at the bottom of the diaphragm and free at the bottom of the stem. Referring to Figure 11.1.1.6, determine the passive pressure p_p at the elevation of the bottom of the diaphragm and apply as a uniform pressure on the stem.

$$p_p = k_p \cdot \gamma_{soil} \cdot h_{soil}$$

$$k_p = \tan^2\left(45 + \frac{\phi}{2}\right)$$

Where:

k_p = coefficient of passive pressure

γ_{soil} = unit weight of backfill soil

hsoil = height of soil from top of deck to top of stem (see Figure 11.1.1.6)

ϕ = angle of internal friction of the backfill material (use 30 degrees)

Then design for a moment M_{up} equal to:

$$M_{up} = \gamma_{EH} \cdot \left(\frac{p_p \cdot h_{stem}^2}{2} \right)$$

A load factor for passive earth pressure is not specified in the LRFD specifications. Use the maximum load factor for active earth pressure, $\gamma_{EH} = 1.50$.

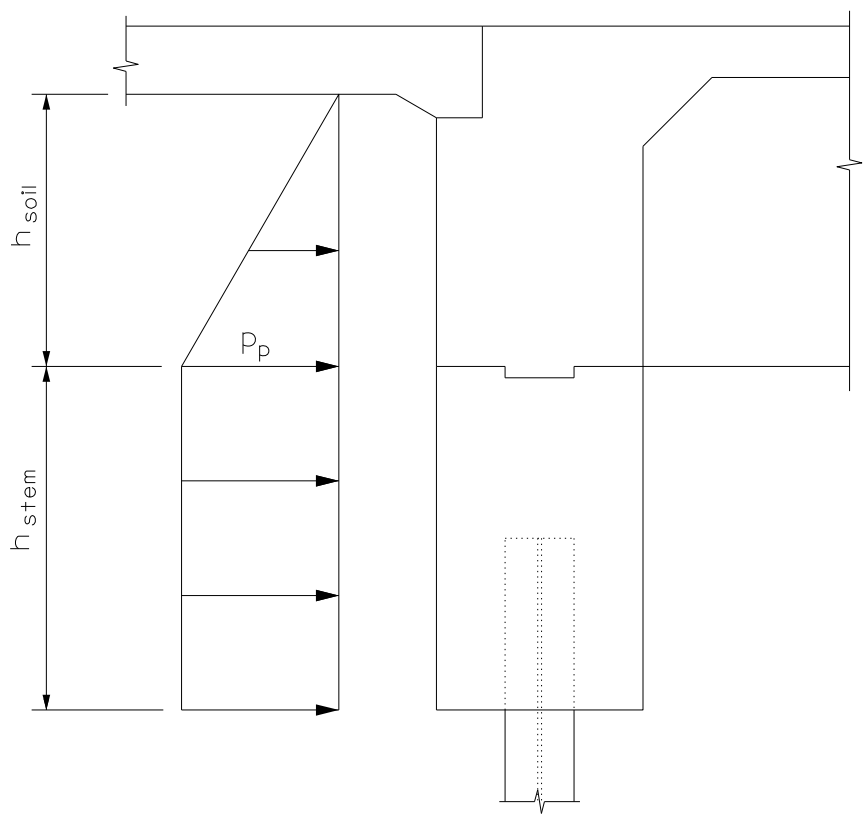

Figure 11.1.1.6

Design abutment stem front and back face horizontal bars for the passive soil pressure which results when the bridge expands. Consider the stem to be a continuous beam with piles as supports and design for a moment of:

$$M_{up} = \gamma_{EH} \cdot \left(\frac{w_p L^2}{10} \right)$$

Where:

w_p = passive pressure calculated at the elevation of the bottom of abutment diaphragm and applied as a uniform pressure on the abutment stem

$= p_p \cdot h_{stem}$

L = pile spacing

Design abutment stem top and bottom horizontal bars for vertical loads due to girder reactions, including dynamic load allowance of 33%. Consider the stem to be a continuous beam with piles as supports. Also, check that the front and back face horizontal bars meet the longitudinal skin reinforcement provisions of LRFD Article 5.7.3.4.

Similar to abutment stem, design abutment diaphragm horizontal bars for the passive soil pressure which results when the bridge expands. For this case, consider the diaphragm to be a continuous beam with the superstructure girders as supports.

For crack control checks, assume a Class 1 exposure condition (γ_e=1.00).

For size and spacing of all other abutment diaphragm bars, refer to the **Integral Abutment Reinforcement Design Guide.**

11.1.2 Semi-Integral Abutments

Semi-integral abutments are similar to integral abutments in that the superstructure and approach panel are connected and move together. Unlike integral abutments, the superstructure is supported on bearings that allow movement independent from the abutment stem. The abutment stem is stationary and is supported by a spread footing or a pile cap on multiple rows of piles. Figure 11.1.2.1 illustrates typical semi-integral abutment cross-section details and reinforcement.

Geometry

Skews on semi-integral abutments are limited to 30 degrees when wingwalls are parallel to the roadway in order to prevent binding of the approach panel/wingwall interface during thermal movement. For other wingwall configurations, bridge length and skew limits are the same as those for integral abutments. Whenever the skew is greater than 30 degrees, provide a concrete guide lug to limit unwanted lateral movement.

Refer to Figure 11.1.2 for minimum cover and clearance requirements. Provide a minimum abutment stem thickness of 4’-0”.

Provide pedestals under the bearings and slope the bridge seat between pedestals to provide drainage toward the abutment front face. A standard seat slope provides one inch of fall from the back of the seat to the front of the seat. In no case should the slope be less than 2 percent. Set pedestals back 2 inches from front face of abutment. Minimum pedestal height is to be 3 inches at front of pedestal. Preferred maximum pedestal height is 9 inches. Provide #5 reinforcing tie bars at 6 inch to 8 inch centers in both directions under each bearing. For bearing pedestals over 9 inches tall, provide column ties in addition to other reinforcement. Provide 2 inches of clear cover for horizontal pedestal bars in the bridge seat. Provide a minimum of 2 inches of clear distance between anchor rods and reinforcing tie bars.

Provide a 3 inch minimum horizontal gap between the abutment diaphragm lug and abutment stem.

When the angle between the back face of wingwall and back face of abutment is less than 135 degrees, provide a 2'-0" x 2'-0" corner fillet on the back face of the wingwall/abutment connection. Extend the fillet from the top of footing to the top of abutment stem on the back face.

Provide a vertical construction joint at the abutment to wingwall connection. Detail the joint location with the goal of making it inconspicuous by considering the wingwall layout, abutment skew angle, fascia beam offset distance from the abutment edge, and aesthetic treatment. For wingwall layout parallel to the roadway, the preferred construction joint location is through the thickness of the abutment in a plane coincident with the back face of the wingwall. For abutments with geometry or aesthetic features that preclude this, another location such as at a vertical rustication line in the abutment or wingwall front face is appropriate. When aesthetic features govern the joint location, the Preliminary Bridge Plans Engineer will provide acceptable construction joint locations in the preliminary plan based on guidance from the Bridge Architectural Specialist. Avoid horizontal construction joints in the wingwall unless absolutely needed. If horizontal joints are needed, locate the joints at a rustication line.

Provide 1 inch of Type B (low density) polystyrene in the vertical gap between the end diaphragm and back face of wingwall. Also, provide 1 inch of Type A (high density) polystyrene in the horizontal gap between the end diaphragm lug and abutment stem. Additionally, provide a membrane waterproofing system with a 1 inch backer rod to allow movement to occur without tearing the waterproofing. Note that the membrane waterproofing and backer rod are incidental to the "Structural

Concrete (___)" and the geotextile filter is incidental to the "Bridge Slab Concrete (___)". See Figures 11.1.2.1 and 11.1.2.2 for details.

Place 1½ inches of Type B (low density) polystyrene between the edge of the approach panel and the back face of the wingwall to minimize binding of the approach panel on the wingwall interface during thermal movement. See approach panel standard plan sheets 5-297.225 and .229 for more details.

Detail semi-integral abutments with a drainage system behind the wall (Detail B910). Outlet the 4 inch drains through the wingwalls and backslopes.

For new bridges, tie the approach panel to the bridge with stainless steel dowel bars that extend at a 45 degree angle out of the diaphragm through the paving bracket seat and bend horizontally 6 inches below the top of the approach panel. (See bar #6S, Figure 11.1.2.1.) For repair projects, provide an epoxy coated dowel rather than stainless steel due to the shorter remaining life of the bridge. Include a ½ inch x 7 inch bituminous felt strip on the bottom of the paving bracket to allow rotation of the approach panel.

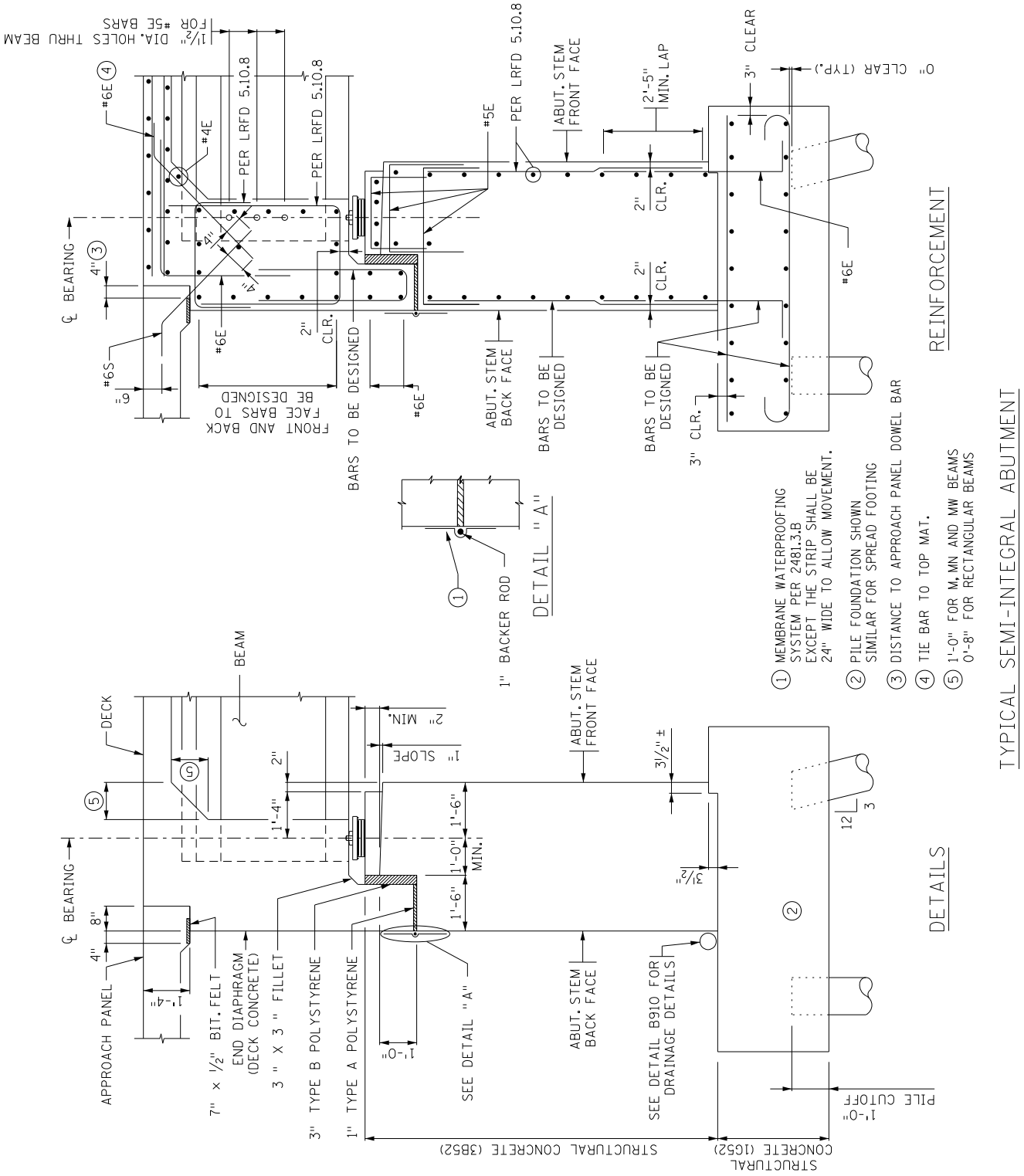

Figure 11.1.2.1

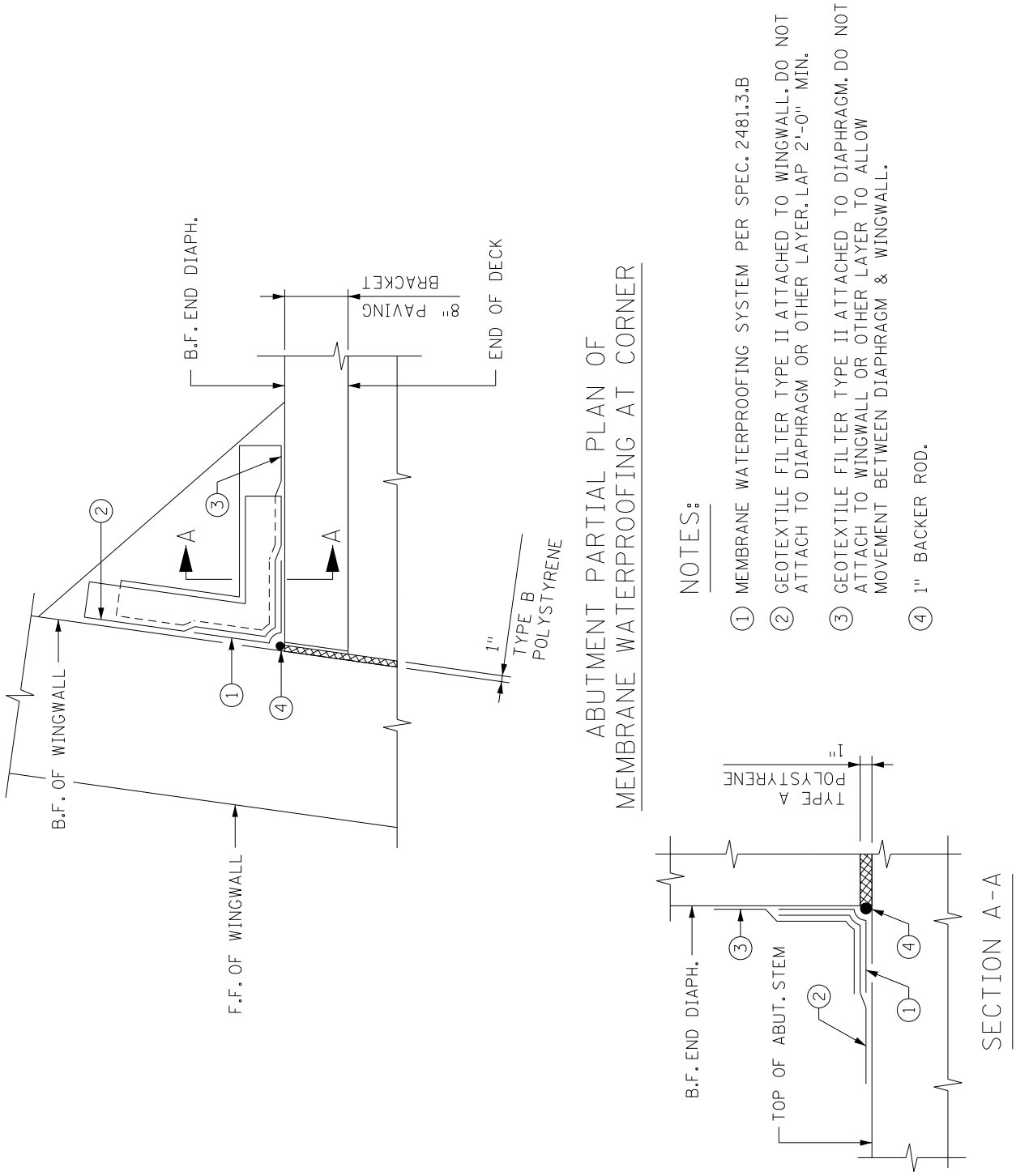

Figure 11.1.2.2

Design/Analysis

For single span bridges, provide fixity at one of the abutments.

Design semi-integral abutment stem, footing, and piles in accordance with Article 11.1.3 of this manual under **Design/Analysis**, except modify the Construction Case 1 loading as follows:

Construction Case 1a – Strength I (0.90DC+1.00EV+1.50EH+1.75LS)
Abutment stem has been constructed and backfilled, but the superstructure and approach panel are not in place. Use minimum load factors for vertical loads and maximum load factors for horizontal loads. Assume a single lane (12 foot width) of live load surcharge (LS) is acting on abutments less than 100 feet long measured along the skew. Apply two lanes of LS for abutments 100 feet or longer.

Construction Case 1b – Strength I (0.90DC+1.00EV+1.50EH+1.75LS)
Abutment has been constructed and the superstructure is in place. All of the backfill has been placed, but the approach panel has not been constructed. Use minimum load factors for vertical loads and maximum load factors for horizontal loads. Assume a single lane (12 foot width) of live load surcharge is acting on abutments less than 100 feet long measured along the skew. Apply two lanes of LS for abutments 100 feet or longer.

Design abutment diaphragm front and back face horizontal bars for the passive soil pressure which results when the bridge expands.

Design abutment diaphragm vertical bars found in the lug to resist the passive pressure that develops when the bridge expands. Assume the diaphragm lug acts as a cantilever fixed at the bottom of the diaphragm.

Semi-integral abutment diaphragm horizontal reinforcement can be designed using the **Integral Abutment Reinforcement Design Guide** found in this section, provided all of the criteria for the design guide are met. When using this guide for semi-integral abutments, the stem height requirement may be ignored. Design front and back face horizontal bars using Table 11.1.1.2, and place 4 additional #6 bars in the diaphragm lug. (See Figure 11.1.2.1).

For skews less than or equal to 20 degrees, place diaphragm transverse bars, slab dowel, and approach panel dowel bars perpendicular to the centerline of bearing. When skews exceed 20 degrees, place bars parallel to the working line.

For semi-integral abutments with total heights (stem plus footing) of less than 15 feet, use vertical contraction joints spaced at approximately 32 feet (see Detail B801). For semi-integral abutments with total heights greater than or equal to 15 feet, use construction joints (with keyways) spaced at approximately 32 feet.

11.1.3 Parapet Abutments

Parapet abutments have backwall or parapet elements that are separate from the end diaphragms in the superstructure. Low parapet abutments have total heights (from top of paving block to bottom of footing) of less than 15 feet. High parapet abutments have total heights equal to or greater than 15 feet. If the total height of the abutment is more than 40 feet, counterforts should be considered.

Geometry

Refer to Figure 11.1.2 for minimum cover and clearance requirements.

When the angle between the back face of wingwall and back face of abutment is less than 135 degrees, provide a 2'-0" x 2'-0" corner fillet on the back face of the wingwall/abutment connection. Extend the fillet from the top of footing to 1 inch below the top of abutment parapet on the back face and provide a 1 inch thick polystyrene bond breaker between the top of fillet and approach panel.

Provide a vertical construction joint at the abutment to wingwall connection. Detail the joint location with the goal of making it inconspicuous by considering the wingwall layout, abutment skew angle, fascia beam offset distance from the abutment edge, and aesthetic treatment. For abutments without maskwalls that have a wingwall layout parallel to the roadway, the preferred construction joint location is at the end of the corner fillet and running through the wingwall thickness. For bridges with mask walls, the preferred construction joint location is through the thickness of the abutment in a plane coincident with the back face of the wingwall. This helps to prevent development of mask wall horizontal cracks at the top of the bridge seat that extend horizontally into the wingwall. For abutments with geometry or aesthetic features that preclude use of the preferred location, another location such as at a vertical rustication line in the abutment or wingwall front face is appropriate. When aesthetic features govern the joint location, the Preliminary Bridge Plans Engineer will provide acceptable construction joint locations in the preliminary plan based on guidance from the Bridge Architectural Specialist. Avoid horizontal construction joints in the wingwall unless absolutely needed. If horizontal joints are needed, hide the joints by locating at a rustication line.

For skews greater than 30 degrees, provide a shear lug to reduce unwanted lateral movement during bridge expansion.

Detail parapet abutment seat and pedestals in accordance with Article 11.1.2 of this manual under **Geometry**.

Design/Analysis

For design of piling or footing bearing pressures, as a minimum, consider the following load cases:

Construction Case 1 – Strength I (0.90DC+1.00EV+1.5EH+1.75LS)
Abutment has been constructed and backfilled, but the superstructure and approach panel are not in place. Use minimum load factors for vertical loads and maximum load factors for horizontal loads. Assume a single lane (12 foot width) of live load surcharge is acting on abutments less than 100 feet long measured along the skew. Apply two lanes of LS for abutments 100 feet or longer.

Construction Case 2 – Strength I (1.25DC)
Abutment has been constructed, but not backfilled. The superstructure has been erected, but approach panel is not in place. Use maximum load factor for dead load.

Final Case 1 – Strength I (1.25DC+1.35EV+0.90EH+1.75LL)
Bridge is complete and approach panel is in place. Use maximum load factors for vertical loads and minimum load factor applied to the horizontal earth pressure (EH).

Final Case 2 – Strength I (1.25DC+1.35EV+1.50EH+1.75LL)
Bridge is complete and approach panel is in place. Use maximum load factor for all loads.

Design abutments for active pressure using an equivalent fluid weight of 0.033 kcf. A higher pressure may be required based on soil conditions. Neglect passive earth pressure in front of abutments.

Use LRFD Table 3.11.6.4-1 for determination of live load surcharge equivalent soil heights. Apply live load surcharge only when there is no approach panel.

Assume that one half of the approach panel load is carried by the abutment.

Distribute superstructure loads (dead load and live load) over the entire length of abutment. For live load, apply the number of lanes that will fit on the superstructure adjusted by the multiple presence factor.

For resistance to lateral loads, see Article 10.2 of this manual to determine pile resistance in addition to load resisted by battering.

Design footing thickness such that no shear reinforcement is required. Performance of the Service I crack control check per LRFD 5.7.3.4 is not required for abutment footings.

Design abutment stem and backwall for horizontal earth pressure and live load surcharge loads.

For stem and backwall crack control check, assume a Class 1 exposure condition (γ_e = 1.00).

11.1.3.1 Low Abutments

Low abutments shall have vertical contraction joints at about a 32 foot spacing. (See Detail B801.)

Detail low abutments with a drainage system (Detail B910). Outlet the 4 inch drains through the wingwalls and backslopes.

Figure 11.1.3.1.1 contains typical dimensions and reinforcing for low parapet abutments.

11.1.3.2 High Abutments

High abutments shall have vertical construction joints (with keyways) at about a 32 foot spacing.

Detail high abutments with a drainage system (Detail B910). Outlet the 4 inch drains through the wingwalls and backslopes. Granular backfills at railroad bridge abutments typically includes perforated pipe drains.

Figure 11.1.3.2.1 illustrates typical high abutment dimensions and reinforcing.

11.1.3.3 Parapet Abutments Behind MSE Walls

[Future manual content]

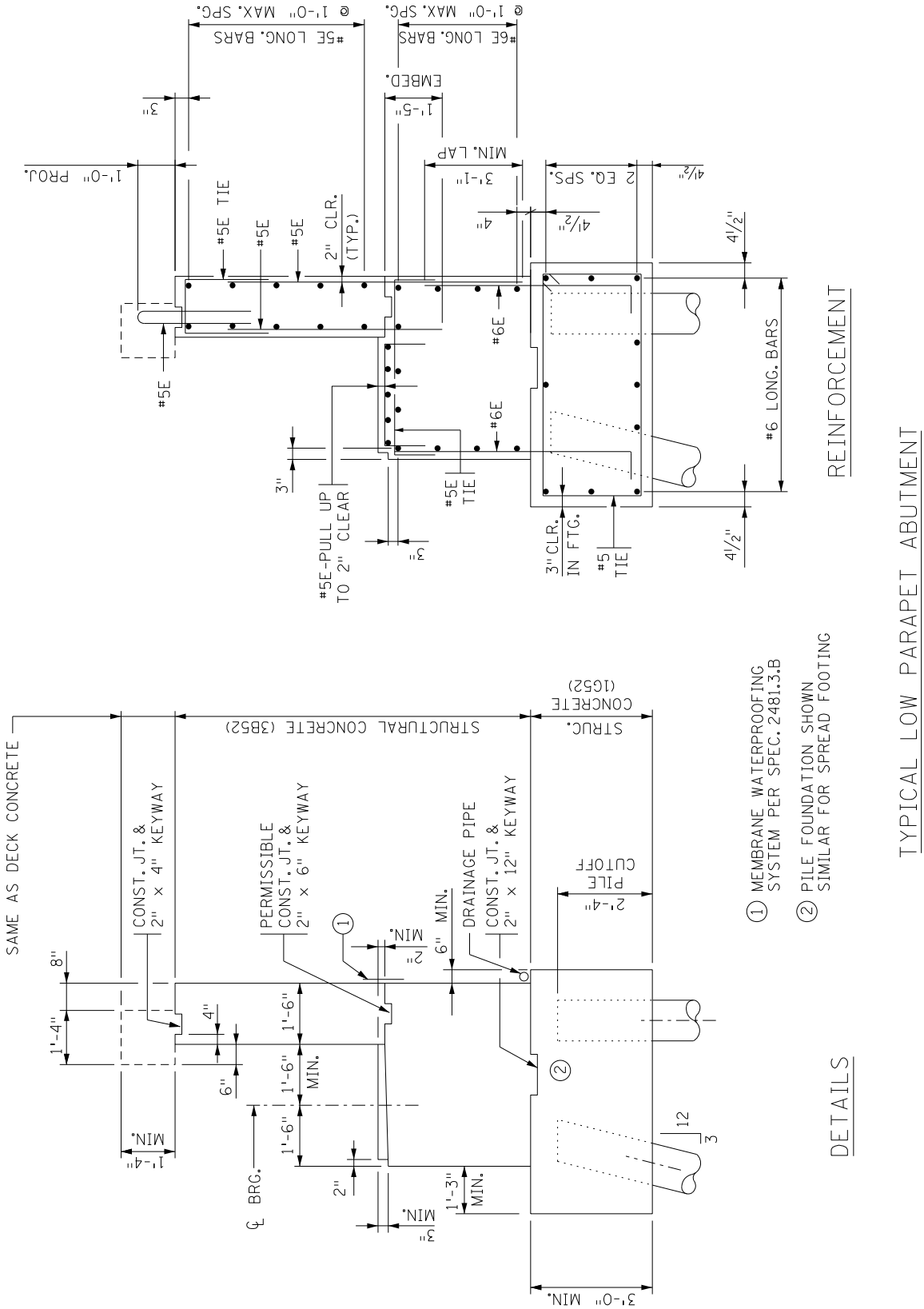

Figure 11.1.3.1.1

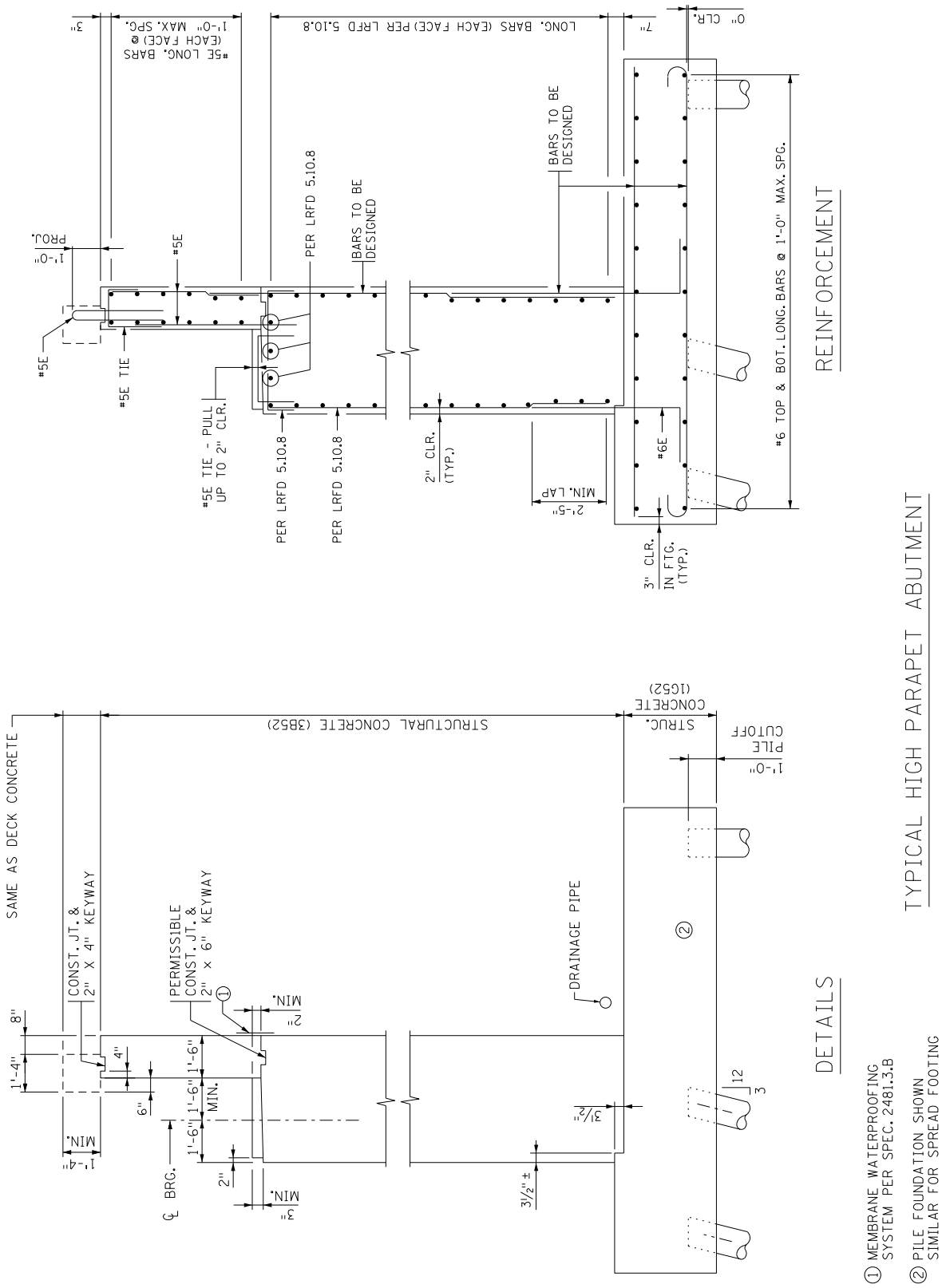

Figure 11.1.3.2.1

11.1.4 Wingwalls

Wingwalls are the retaining portion of the abutment structure that are located outside the abutment stem.

11.1.4.1 Wingwall Geometry

Wingwalls can be oriented parallel to the roadway, parallel to the abutment stem, or flared. See Figure 11.1.4.1.1. The intended orientation for the wingwalls will be provided in the Preliminary Plan. If flared, set the flare angle between the wingwall and centerline of bearing to an increment of 15 degrees.

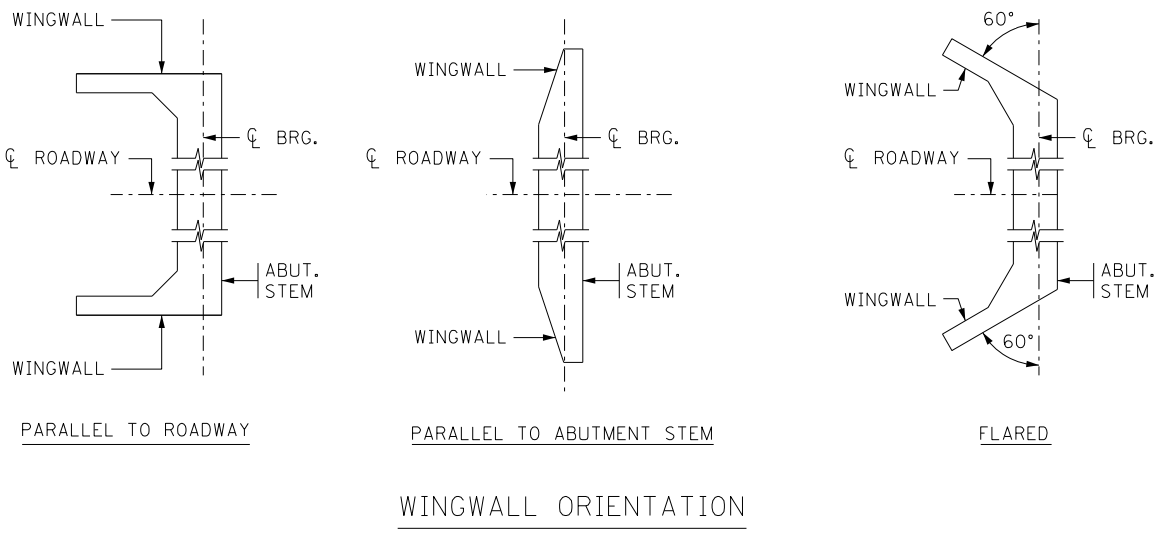

Figure 11.1.4.1.1

Provide a minimum wingwall thickness of 1′-6″. For shorter wingwall heights, use a constant thickness. For taller wingwalls, use a wingwall thickness of 1′-6″ at the top for approximately 2 feet of height to prevent binding of the approach panel if settlement occurs, and use a variable thickness in the lower portion by battering the back face at 1:24.

For integral abutments, the maximum wingwall cantilever length is 14 feet. For wingwalls oriented parallel to the roadway or flared, cantilever length is defined as the distance from the back face of abutment to the wingwall end. For wingwalls parallel to the abutment stem, cantilever length is defined as the distance from the intersection point of abutment stem and wingwall to the wingwall end. The maximum cantilever beyond the edge of footing for parapet and semi-integral abutment wingwalls is 12 feet.

The preferred wingwall layout for parapet and semi-integral abutments is shown in Figure 11.1.4.1.2. It consists of a wingwall supported by a

single footing (a continuation of the abutment footing) with an 8 foot end cantilever. The cantilever may be stepped at the end of the footing, but must be a minimum of 4'-6" below grade.

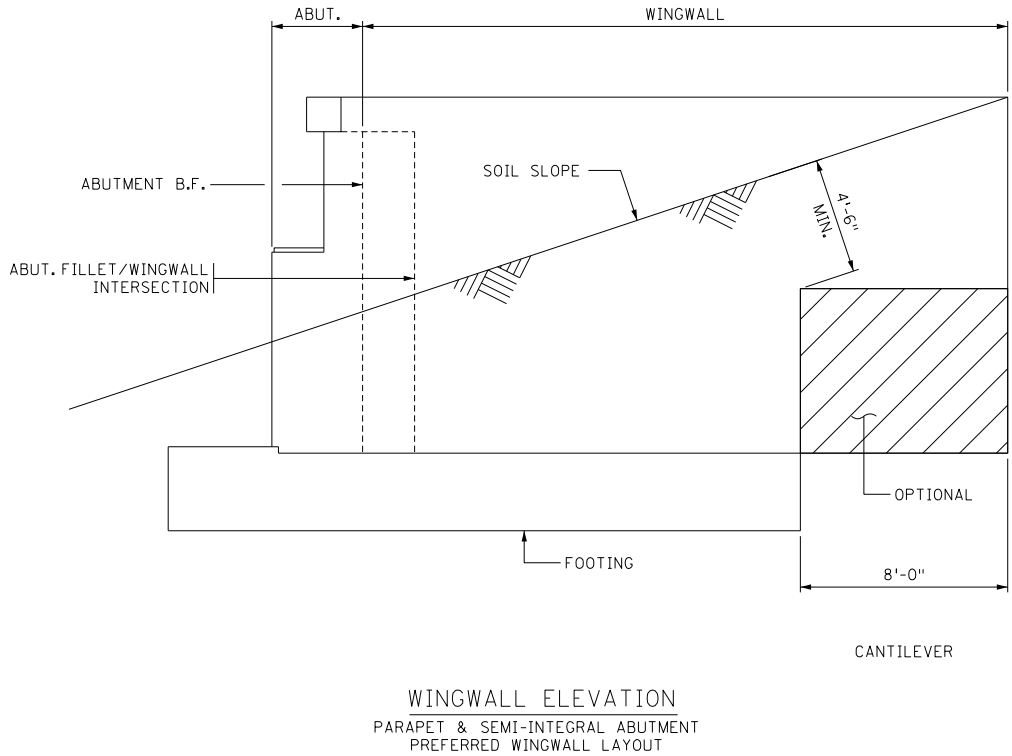

Figure 11.1.4.1.2

For parapet and semi-integral abutment wingwalls where the distance from the back face of abutment to the end of the wingwall footing is greater than 30 feet, multiple stepped or separate footings with different elevations should be considered. Generally, stepped footings are not recommended for pile foundations and separate footings are not recommended for spread footing foundations. Discuss the options with the Regional Bridge Construction Engineer.

For multiple stepped footings, use step details similar to those shown on retaining wall standard sheet 5-297.624 (2 of 3).

For multiple separate footings, use the following guidance:

- Use a maximum slope of 1 vertical on 1.5 horizontal between the bottom of footing elevations.

- Limit the cantilever (beyond the end of the footing) of wingwalls to 6 feet.
- Assume soil pressures between abutment and wingwall footing are equally distributed to both footings.

For semi-integral and parapet type abutments, avoid horizontal wingwall construction joints unless hidden by other horizontal details. Horizontal joints tend to become visible over time due to water being carried through the construction joint by capillary action. For integral abutments, see Figure 11.1.1.1 and requirements for construction joints listed in Article 11.1.1 of this manual.

Provide vertical construction joints on long wingwalls at a maximum spacing of 32 feet.

Where wingwalls are oriented parallel to the roadway, sidewalk and curb transitions should generally not be located adjacent to wingwalls.

11.1.4.2 Wingwall Design

The design process for wingwalls will depend on the abutment type and wingwall geometry. For integral abutments, the wingwall is a horizontal cantilever attached to the abutment stem with no footing support. For semi-integral and parapet abutments, the wingwalls will typically be supported by a footing for a portion of their length with a horizontal cantilever at the end.

For integral abutment wingwalls, use the following guidance:

- Design wingwalls as fixed cantilevers to resist lateral earth (EH) and live load surcharge (LS) loads.
- For wingwalls oriented parallel to the roadway, assume active soil pressure using an equivalent fluid weight of 0.033 kcf.
- For flared wingwall orientation, designing for active soil pressure may not be adequate. Depending on the bridge width, bridge length, pier fixity, and wingwall flare angle, loading from passive soil pressure should be considered.
- For wingwalls oriented parallel to the abutment stem, design for passive soil pressure loading.

For semi-integral and parapet abutment wingwalls, use the following guidance (see Figure 11.1.4.2.1):

- Design the vertical back face wingwall dowels to resist the entire moment caused by the horizontal loads.

- Design wingwall horizontal back face reinforcement at end of footing to resist loads applied to horizontal cantilever region.
- Depending upon the wingwall height tied to the abutment stem and the length of wingwall supported by the footing, consider analyzing wingwall as a plate fixed on 2 edges to:
    - determine the stem-to-wingwall horizontal reinforcement.
    - determine the front face reinforcement in wingwall center region.

  For all wingwalls with a height greater than 20 feet, a plate analysis is required.
- Provide reinforcement through the construction joint at the intersection of the wing and abutment wall to transfer wingwall loads to the abutment, if applicable.
- Within the plan set, provide wingwall pile loads if they are less than 80% of the loads in the main portion of the abutment. When listing the total length of piling for an abutment that includes a separate wingwall, check if the wingwall piles needs to be longer than the abutment piles.

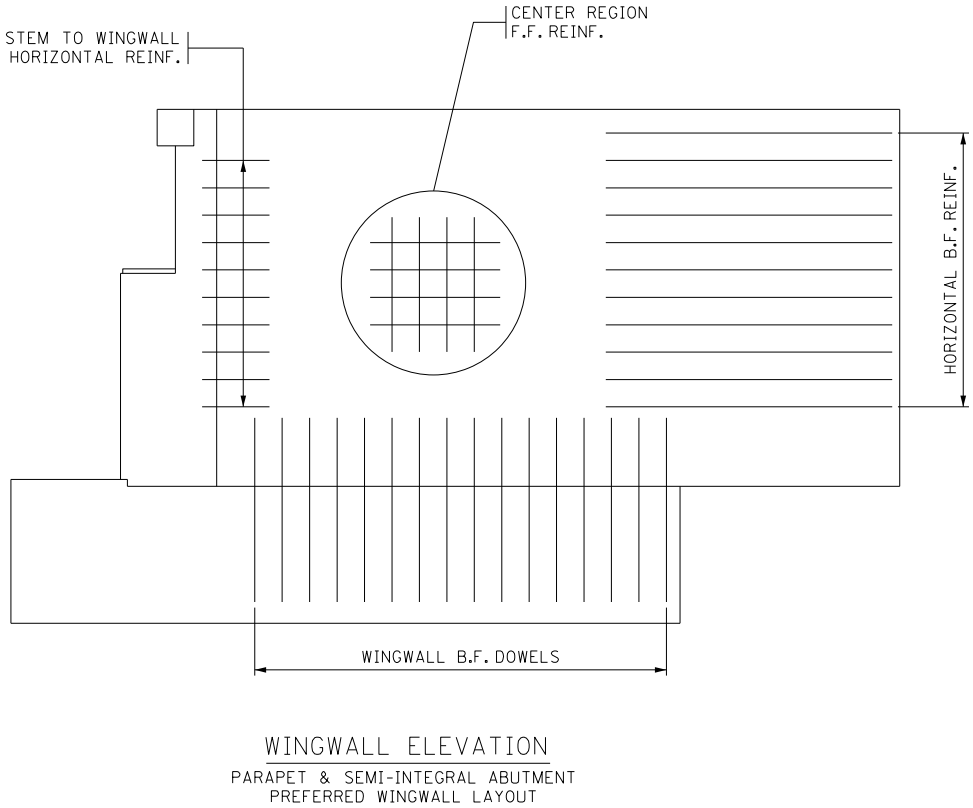

Figure 11.1.4.2.1

When checking crack control for wingwalls, use the Class 1 exposure condition ($\gamma_e = 1.00$).

11.1.5 Bridge Approach Panels

Details for bridge approach panels for concrete and bituminous roadways are typically included in the roadway plans and are provided on roadway Standard Plans 5-297.222 through 5-297.231. Use a concrete wearing course on approach panels when the bridge deck has a concrete wearing course. The wearing course will be placed on the bridge superstructure and the approach panels at the same time. Therefore, include the wearing course quantity for both the approach panels and the superstructure when computing the wearing course pay item quantity for the bridge plan.

Approach panels are a roadway pay item. The preliminary bridge plan provides information to the roadway designer regarding the appropriate approach panel detail to include in the roadway plans (for a bridge with concrete barrier on the approach panel or for a bridge with concrete barrier on the wingwall). Coordinate approach panel curb and median transitions with roadway designers.

Provide 8 inches of width for the abutment paving bracket, which supports the approach panel. Place the paving bracket at 1′-4″ minimum below the top of roadway surface. The reinforcement in the abutment end block is shown in Figure 11.1.5.1.

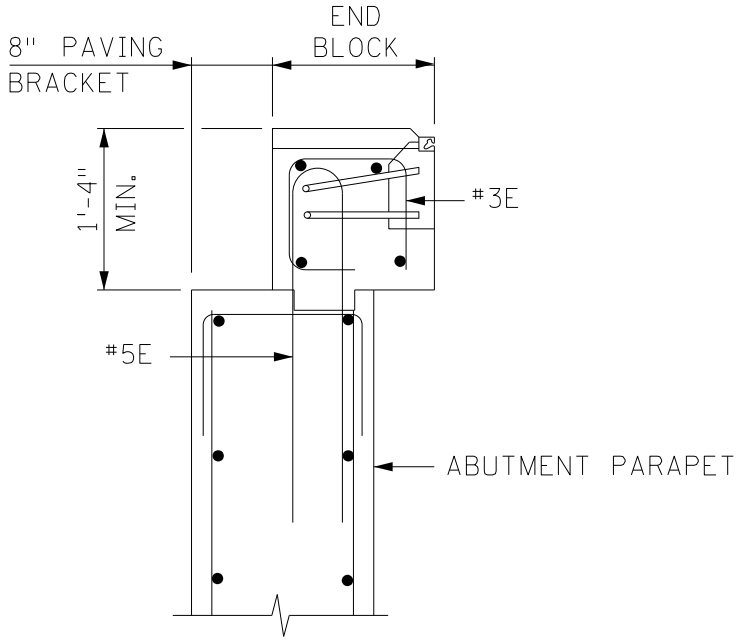

Abutment End Block Reinforcement
Figure 11.1.5.1

11.1.6 Bridge Approach Treatment

For typical new bridge projects, the preliminary bridge plan provides information to the roadway designer regarding the appropriate bridge approach treatment detail to include in the roadway plans (for a bridge with integral abutments or a bridge with abutments on a footing). For repair projects and other projects where no separate grading plans are prepared, make sure that bridge approach treatments are consistent with the appropriate roadway Standard Plan 5-297.233 or 5-297.234.

11.2 Piers

A wide variety of pier types are used in bridge construction. The simplest may be pile bent piers where a reinforced concrete cap is placed on a single line of piling. A more typical pier type is a cap and column pier, where columns supported on individual footings support a common cap. The spacing of columns depends on the superstructure type, the superstructure beam spacing, the column size, and the aesthetic requirements. A typical cap and column pier for a roadway may have from three to five columns. At times wall piers may be used to support superstructures. Where extremely tall piers are required, hollow piers may be considered. Specialty bridges such as segmental concrete bridges may use double-legged piers to reduce load effects during segmental construction.

11.2.1 Geometrics

When laying out piers, consider the economy to be gained from reusing forms (both standard and non-standard) on different piers constructed as part of a single contract.

Dimension piles, footing dimensions, and center of columns to working points.

For pier caps (with cantilevers) supported on multiple columns, space the columns to balance the dead load moments in the cap.

Provide a vertical open joint in pier caps that have a total length exceeding 100 feet. The design may dictate that additional pier cap joints are necessary to relieve internal forces.

Label the ends of piers (South End, North End, etc.).

Concrete Pier Columns

The minimum column diameter or side of rectangular column is 2’-6”.

To facilitate the use of standard forms, detail round and rectangular pier columns and pier caps with outside dimensions that are multiples of 2

inches. As a guide, consider using 2′-6″ columns for beams 3′-0″ or less in depth, 2′-8″ columns for beams 3′-1″ to 4′-0″, 2′-10″ columns for beams 4′-1″ to 5′-0″, and 3′-0″ columns for beams over 5′-0″ unless larger columns are necessary for strength or for adequate bearing area. Aesthetic considerations may result in larger sizes and will be provided in the Preliminary Plan.

Show an optional construction joint at the top of columns. For tall piers, consider additional intermediate permissible construction joints for constructability. All construction joints should be labeled and the size of keyways identified.

Concrete Pier Caps

The preferred configuration for the top of pier caps is level or sloped with individual pedestals at each beam seat. The minimum set-back distance for pedestals is $1^1/_2$ inches from the edge of cap. The minimum pedestal height is 3 inches. The preferred maximum pedestal height is 9 inches. When pedestal height exceeds 9 inches, consider using a stepped beam seat configuration for the pier cap.

Choose a pier cap width and length that is sufficient to support bearings and provide adequate edge distances. As a guide, choose a pier cap depth equal to 1.4 to 1.5 times the width.

The bottom of the pier cap should be approximately parallel to the top. Taper cantilever ends about $^1/_3$ of the depth of the cap. When round pier columns are required, use rounded pier cap ends as well. The ends of pier caps for other types of pier columns should be flat. Detail solid shaft (wall) piers with rounded ends for both the cap and shaft. Aesthetic considerations may alter this guidance and will be shown in the Preliminary Plan.

Detail a $^3/_4$ inch V-strip on the bottom of pier cap ends to prevent water from migrating on to substructure components.

Integral Steel Box Beam Pier Caps

Avoid the use of steel box beam pier caps whenever possible. Conventional concrete pier caps or open plate girder pier caps are preferred.

To ensure that components are constructible, review the design details of box beam pier caps with the Fabrication Methods Unit and the Structural Metals Inspection Unit early in the plan development process.

The minimum dimensions of a box pier cap are 3'-0" wide by 4'-6" high. Make access openings within the box as large as possible and located to facilitate use by inspection personnel. The minimum size of access openings in a box pier cap is 24" x 30" (with radiused corners).

Provide access doors near each end. If possible, locate the door for ladder access off of the roadway. Orient the hinge for the access doors such that doors swing away from traffic. Access doors can be placed on the side of box pier caps if they are protected from superstructure runoff. If not, locate in the bottom of the cap. Bolt the frame for the door to the cap in accordance with Bridge Detail Part I, B942.

Bolted internal connections are preferred to welded connections. Fillet welds are preferred to full penetration welds.

Avoid details that may be difficult to fabricate due to access or clearance problems. Assume that welders need an access angle of at least 45 degrees and require 18 inches of clear working distance to weld a joint. The AISC Manual of Steel Construction contains tables with entering and tightening clearance dimensions for bolted connections.

Paint the interior of boxes for inspection visibility and for corrosion protection. Provide drainage holes with rodent screens at the low points of the box.

11.2.2 Pier Design and Reinforcement

Provide 2 inches minimum clear distance between anchor rods and longitudinal reinforcement bars. For piers without anchor rods, provide a single 6 inch minimum opening between longitudinal reinforcement bars to facilitate concrete placement.

For typical pier caps, limit the size of pier cap stirrups to #5. Use open stirrups unless torsion loads are large enough to require closed stirrups. If necessary, use double stirrups to avoid stirrup spacing of less than 4 inches.

Provide #5 reinforcing tie bars at 6 inch to 8 inch centers in both directions under each bearing. For bearing pedestals over 9 inches tall, provide column ties in addition to other reinforcement. Detail ties to clear bearing anchor rods by a minimum of 2 inches.

For additional guidance on reinforcement detailing, see the web published document, *Suggested Reinforcement Detailing Practices*, which can be found at http://www.dot.state.mn.us/bridge/standards.html.

11.2.2.1 Pile Bent Piers

The preliminary plan will specify whether a pile encasement wall must be provided. An encasement wall provides stability and protects the piling from debris. Dimension encasement walls to extend from the bottom of the cap to the flowline.

For pile bent piers that do not require an encasement wall, use cast-in-place concrete (CIP) piles no smaller than 16 inches in diameter.

Design the piles to resist first and second order combined axial and bending effects under the strength limit state.

Limit deflections at the top of piles to avoid excessive movement under typical loads (not including uniform temperature effects). Choose a deflection limit that ensures the overall structure and its components will remain at a serviceable level throughout its performance life. Deflection criteria and subsequent limits shall consider number of spans, span length, span configuration, joint type, joint configuration, joint performance, bearing type, bearing layout, etc.

Consider limiting longitudinal deflections to the joint opening at the median temperature under the service limit state. Consider all loads in deflection calculations except the uniform temperature change. Deflections due to uniform temperature change are not included since they are superimposed deformations resulting from internal force effects applied to the structure and are accounted for when the joint openings are sized. Two inches is a practical limit for typical bridges.

Use the following to determine the flexural rigidity (EI_{eff}) of CIP piles for stiffness (deflection) calculations, taken from the *AISC Steel Construction Manual*, 14th Edition, Section I2.2b.:

$$EI_{eff} = E_sI_s + E_sI_{sr} + C_3E_cI_c$$

where E_s = elastic modulus of steel
I_s = moment of inertia of steel pile section
I_{sr} = moment of inertia of reinforcing bars
E_c = elastic modulus of concrete
I_c = moment of inertia of concrete section

$$C_3 = 0.6 + 2\left(\frac{A_s}{A_c + A_s}\right) \leq 0.9$$

Using the above will provide flexural rigidity values between those calculated using the *AASHTO Guide Specifications for LRFD Seismic Bridge Design* and those calculated assuming a full composite section (with concrete transformed).

Determine unbraced length by adding together the length of the pile from bottom of pier cap to ground and the assumed depth to fixity below ground.

In the direction perpendicular to the pier, use an effective length factor K_{perp} of 2.1 for analysis (fixed cantilever). In the direction parallel to the pier, use an effective length factor K_{par} of 1.2 for analysis (fixed at bottom and rotation-fixed, translation-free at the top).

Determine structural capacity for piles considering combined axial compression and flexure, and buckling. For CIP piles, determine axial resistance using AASHTO Article 6.9.5 and flexural resistance using AASHTO Article 6.12.2.3.2. Do <u>not</u> use the provisions of AASHTO Article 6.9.6 or 6.12.2.3.3.

Analyze the pier cap as a continuous beam supported by multiple pile supports.

For girder type superstructures, live loads are transmitted to the pier cap through the girders. Using multiple load cases, pattern the live load on the deck within the AASHTO defined lane widths to obtain maximum load effects in the pier cap. For determination of live load transmitted to the girders from the deck, assume the deck is simply supported between beam locations. Use the lever rule for exterior girders. Do not use the maximum girder reaction (computed when designing the girders) at all girder locations on the pier beam, as this will result in unrealistically high live load reactions. For piers with pile encasement walls, ignore the wall for the pier cap design.

For pier cap crack control check, assume Class 2 exposure condition ($\gamma_e = 0.75$).

Use standard hooks to develop the top longitudinal reinforcement at the ends of pier caps.

For typical bridges, base the distribution of longitudinal forces to individual piers on the number of contributing fixed piers. For bridges with tall piers or long multi-span bridges, consider performing a stiffness analysis (considering pier and bearing stiffnesses) to determine the percentage of longitudinal forces distributed to each pier.

Galvanize piles from top of pile to 15 feet below ground surface to protect against corrosion.

11.2.2.2 Cap & Column Type Piers

Design pier footing thickness such that no shear reinforcement is required.

Performance of the Service I crack control check per LRFD 5.7.3.4 is not required for pier footings.

Include a standard hook at each end of all footing longitudinal and transverse reinforcement.

Use 90 degree standard hooks to anchor the dowel bars in the footing/column connection. Show the lap splice length for bent dowels and check development length of hooked end of dowel bar at footing/column interface. Unless analysis shows this is unnecessary, size dowel bars one size larger than column vertical reinforcement when the dowel bar is detailed to the inside of the column vertical.

`

Provide the dimensions between the center of column dowel patterns and the nearest working points.

To simplify construction, detail vertical column reinforcement to rest on top of the footing.

Use spiral reinforcement on round columns with a diameter less than or equal to 42 inches. Use a #4 spiral with a 3-inch pitch. Extend spirals no less than 2 inches into the pier cap. Use Table 5.2.2.3 to compute the weight of column spiral reinforcement.

Design round columns over 42 inches in diameter and square or rectangular columns with tied reinforcement. Use ties no smaller than #3 when the column vertical bars are #10 or smaller. Use #4 or larger ties for #11, #14, #16, and bundled column vertical bars. The maximum spacing for ties is 12 inches. Place the first tie 6 inches from the face of the footing, crash wall, or pier cap.

Design the columns to resist first and second order combined axial and bending effects under the strength limit state.

Generally, designers can conservatively use the following guidance for the distribution of longitudinal forces to individual piers:

- For fixed piers, divide the entire longitudinal force among the contributing fixed piers.
- For expansion piers, design each pier for a longitudinal force equal to the total longitudinal force divided by the total number of substructures.

Alternatively, do a stiffness analysis (considering pier and bearing stiffnesses) to determine the percentage of longitudinal forces distributed to each pier. A stiffness analysis is encouraged whenever there are 4 or more piers.

In the direction perpendicular to the pier, use an effective length factor K_{perp} of 2.1 for analysis (fixed cantilever). In the direction parallel to the pier, use an effective length factor K_{par} of 1.2 for analysis (fixed at bottom and rotation-fixed, translation-free at the top). Note that for piers with crash struts, the column length L is measured from the top of the crash strut to the bottom of the pier cap when considering loads in the direction parallel to the pier cap.

For pier caps with multiple column supports, analyze cap as a continuous beam.

For girder type superstructures, live loads are transmitted to the pier cap through the girders. Using multiple load cases, pattern the live load on the deck within the AASHTO defined lane widths to obtain maximum load effects in the pier cap. For determination of live load transmitted to the girders from the deck, assume the deck is simply supported between beam locations. Use the lever rule for exterior girders. Do not use the maximum girder reaction (computed when designing the girders) at all girder locations on the pier beam, as this will result in unrealistically high live load reactions.

For pier cap crack control check, assume Class 2 exposure condition ($\gamma_e = 0.75$).

Use standard hooks to develop the top longitudinal reinforcement at the ends of pier caps.

11.2.3 Pier Protection [3.6.5] [3.14] [AREMA Manual for Railway Engineering, Vol. 2, Ch. 8, Art. 2.1.5.1 and C-2.1.5.1]

The AASHTO LRFD Specifications includes requirements for the protection of structures against vessel and vehicle collision. The *AREMA Manual For Railway Engineering* (AREMA) includes structure protection requirements for railway train collision. The intent of the requirements is to protect bridges from collision forces that could trigger progressive collapse of the bridge.

11.2.3.1 Protection From Vessel Collision [3.14]

When a bridge crosses a navigable waterway, the piers must be designed to resist a vessel collision load or be adequately protected (by fenders, dolphins, etc.) as specified in Article 3.14 of the AASHTO LRFD Specifications. See Article 3.14.2 of this manual for more information.

11.2.3.2 Protection From Vehicle & Train Collision [3.6.5] [AREMA Manual for Railway Engineering, Vol. 2, Ch. 8, Art. 2.1.5.1 and C-2.1.5.1]

When a bridge crosses a roadway or railway, the piers must be evaluated for risk of vehicle or train collision, and the design completed accordingly.

Note that due to the resistance provided by the soil behind abutment walls, abutments are considered adequate to resist collision loads and are exempt from meeting the AASHTO substructure protection requirements.

When a vehicle or train collision load occurs, lateral load will transfer to the foundation. Resistance will be provided by passive soil pressure, friction, and pile structural capacity. In addition, movement beyond what is reasonable for service loading is allowed for an extreme event situation where the survival of the bridge is the goal. Therefore, all spread footing, pile, and drilled shaft foundations are considered adequate to resist lateral collision loads and are exempt from collision load extreme event limit state analysis when the other requirements of this policy are met. Also note that when a crash strut is the proposed solution to meet the pier protection requirements, the ability of the existing foundation to carry the additional dead load of the crash strut must be considered.

Unless they meet the exemption criteria in Article 11.2.3.2.1 of this manual, pile bent piers are not allowed for use within 30 feet of roadway edges or within 25 feet of railroad track centerlines unless protected by a TL-5 barrier or approved by the State Bridge Design Engineer. In the rare case where it is allowed without barrier protection, the piles must be concrete encased and meet the "heavy construction" requirements of AREMA given in Article 11.2.3.2.2 of this manual. Design the concrete encased pile wall to resist the AASHTO 600 kip collision load. The pile foundation below ground is considered adequate as stated above and is

exempt from collision load extreme event limit state analysis. In addition, the superstructure must be made continuous over the pier to prevent loss of bearing in the event of a collision.

11.2.3.2.1 Pier Protection for New Bridges Over Roadways [3.6.5]

Piers Considered Exempt From Protection Requirements

Bridges spanning over roadways with low design speeds or minimal truck traffic are at a low risk of vehicle collision. Therefore, piers of bridges that meet either of the criteria below are not required to be protected from or designed to resist a vehicle collision:

1) All bridges with redundant piers where the design speed of the roadway underneath ≤ 40 MPH. Redundant piers are pile bent piers or piers containing continuous pier caps with a minimum of 3 columns.
2) All non-critical bridges with redundant piers where the design speed of the roadway underneath > 40 MPH and where one of the following applies:
   - Roadway underneath is undivided (no median) with ADTT < 800
   - Roadway underneath is divided (separated by median or barrier) and on a tangent section where it passes under the bridge and has ADTT < 2400
   - Roadway underneath is divided (separated by median or barrier) and horizontally curved where it passes under the bridge and has ADTT < 1200

   A critical bridge is defined as any of the following:
   - a bridge carrying mainline interstate
   - a bridge spanning over a mainline interstate
   - any bridge carrying more than 40,000 ADT (not ADTT)
   - any bridge spanning over a roadway carrying more than 40,000 ADT (not ADTT)

   ADTT values stated above are based on AASHTO LRFD Table C3.6.5.1-1 and are given for two-way traffic. If ADTT values are not available, assume ADTT is equal to 10% of ADT. For both ADT and ADTT, use 20 year projected values.

All other bridge piers must be located outside the clear zone defined below, protected by a barrier, or designed to resist a vehicle collision.

Pier Protection Requirements for Non-Exempt New Bridges Spanning Roadways

Bridges carrying or spanning over roadways with high design speeds and substantial traffic are at higher risk and are of major concern for vehicle collision.

All bridge piers that do not meet the criteria for "Exempt" bridges shall meet the protection requirements below for piers located within the clear zone, defined as 30 feet from the roadway edge (edge of lane) nearest the pier. Designers must also coordinate the barrier/crash strut requirements and any traffic protection requirements with the road designer. The protection options are as follows:

- Provide a crash strut designed to resist a 600 kip collision load. See Article 11.2.3.2.4 of this manual.

OR

- Design individual columns for a 600 kip collision load in accordance with AASHTO Article 3.6.5.

OR

- Protect with a 54 inch high TL-5 barrier placed within 10 feet from the face of pier or a 42 inch high TL-5 barrier placed more than 10 feet from the face of the pier. See Article 11.2.3.2.5 of this manual.

OR

- Validate that the structure will not collapse by analyzing the structure considering removal of any single column. Consider all dead load with a 1.1 load factor. Use live load only on the permanent travel lanes, not the shoulder, with a 1.0 load factor.

11.2.3.2.2 Pier Protection for New Bridges Over Railways [AREMA Manual for Railway Engineering, Vol. 2, Ch. 8, Articles 2.1.5.1 and C-2.1.5.1]

Piers of New Bridges Spanning Railways

Piers located less than 25 feet from the centerline of railroad tracks shall meet the provisions of AREMA 2.1.5.1, which requires that the piers either be of "heavy construction" or have a crash wall.

A pier is considered to be of "heavy construction" when it meets all of the following:

- The cross-sectional area of each column is a minimum of 30 square feet
- Each column has a minimum dimension of 2.5 feet
- The larger dimension of all columns is parallel to the railroad track

Crash walls must meet the following geometric requirements:

- Extend the top of the crash wall a minimum of:
  - 6 feet above top of railroad track when pier is between 12 feet and 25 feet from centerline of tracks
  - 12 feet above top of railroad track when pier is 12 feet or less from centerline of tracks
- Extend the bottom of the crash wall a minimum of 4 feet below ground line
- Extend the crash wall one foot beyond outermost columns and support on a footing
- Locate the face of the crash wall a minimum of 6 inches outside the face of pier column or wall on railroad side of pier
- Minimum width of crash wall is 2.5 feet
- Minimum length of crash wall is 12 feet

Piers of "heavy construction" and crash walls adjacent to railroad tracks shall be designed for a minimum railway collision load of 600 kips applied at an angle up to 15 degrees from the tangent to the railway. Apply the collision load at 5 feet above the top of rail elevation.

11.2.3.2.3 Pier Protection for Existing Bridges Over Roadways [3.6.5]

Piers of existing bridges that are part of bridge major preservation projects, bridge rehabilitation projects, or roadway repair projects may need to meet the pier protection policy requirements for new bridges given in Article 11.2.3.2.1 of this manual. The decision will be made based on the criteria found in the *Bridge Preservation Improvement Guidelines (BPIG)*.

For trunk highway bridge repair projects, the Regional Bridge Construction Engineer will coordinate with the District to determine whether a pier retrofit is required per the *BPIG*. Any requirements will then be included as part of the Bridge Repair Recommendations.

For local system bridge repair projects, the designer must coordinate with the City or County Engineer to ensure that pier retrofitting has been considered.

Note that when a crash strut is the proposed solution to meet the pier protection requirements, the ability of the existing foundation to carry the additional dead load of the crash strut must be considered.

11.2.3.2.4 Crash Struts for Pier Protection From Vehicle Collision

Geometry

Refer to Figure 11.2.3.2.4.1. Extend the strut from the top of column footings to a minimum of 60 inches above the finish grade. When the strut spans between separate column footings, locate the bottom of the strut a minimum of 1 foot below the finished grade.

Provide a 3 foot minimum thickness for pier crash struts. For new pier construction, locate the strut vertical face 2 inches minimum outside of each pier column face. For pier retrofit construction, locate the strut vertical face 5 inches minimum outside of each pier column face.

A vertical face is assumed in the guidance given in this manual and is shown in all the figures. Note that an F-shape or single slope is allowed for the strut face, but will require additional strut width and detailing.

Extend the crash strut a minimum of 3 feet beyond the face of the exterior columns when a guardrail connection is required and 1 foot minimum when there is no guardrail connection. For struts that tie into a median barrier or guardrail, a vertical taper may be required at the end of the strut. Contact the MnDOT Design Standards Unit at 651-366-4622 for crash strut end taper requirements. If possible, strut to median barrier tapers should be constructed with the median barrier and located in the roadway plan. Coordinate the details with the road designer.

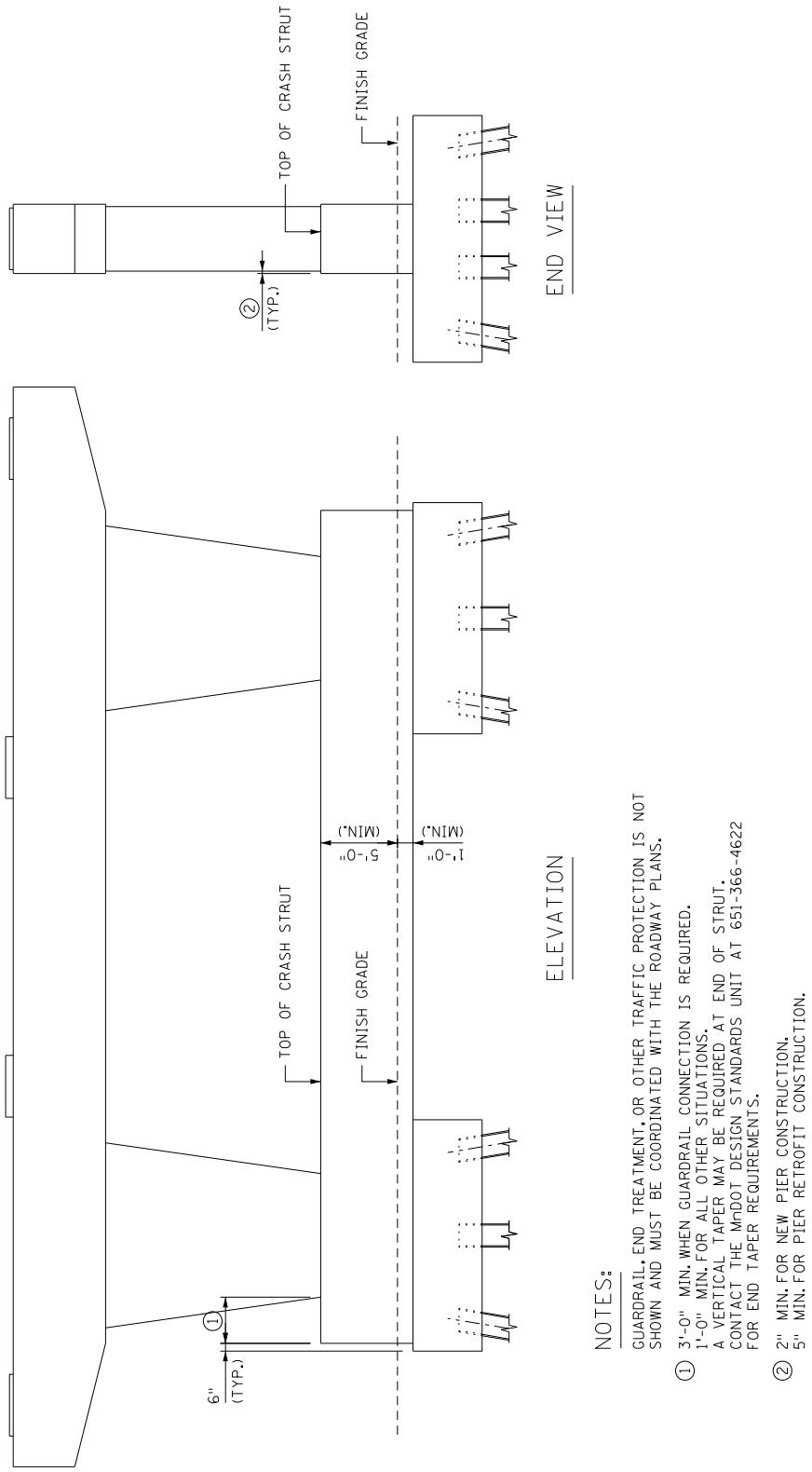

Figure 11.2.3.2.4.1
Crash Strut Details

Design

The general requirements for crash strut design are as follows:

- Design the crash strut for a 600 kip collision load applied at an angle up to 15 degrees from the tangent to the roadway.
- Apply the collision load at 5 feet above the ground line. Distribute the collision load over a length of 5 feet.
- In the column footing region, design the strut to resist the entire collision load independent of the column strength. Design the dowel reinforcement to connect the crash strut to the footing. Using yield-line theory, consider the following 2 cases:
    - Case 1) Ignoring the column strength, assume a diagonal yield-line occurs at failure. Determine crash strut capacity similar to how barrier railing capacity is determined in Section 13 of this manual.
    - Case 2) Ignoring the column strength, assume a horizontal yield-line at failure, located at the footing to crash strut interface. For this case, the strut acts as a cantilever fixed at the footing to crash strut interface and the strut capacity is based on the vertical dowels only.

  Design the dowels for the case that governs. (Typically, Case 2 will govern.) Where Case 1 governs, set the length of column footing to exceed the critical yield line failure length L_c value.
- In the column footing region, assume the crash strut resists the collision load and design the column for all other loads. Extend column reinforcement through the height of the strut, detailing the collision strut reinforcement outside of the column reinforcement. Assume that the pier cap and pier strut expand and contract similarly.
- In the region between the column footings, design the strut as a simply supported horizontal beam spanning between the column footings, assuming a span length L equal to the distance between the footing edges.

Crash strut reinforcement can be determined by using the tables that follow, provided the above minimum dimensions are met. Also, refer to Figure 11.2.3.2.4.2. The tables and guidance below are for use with new construction only. On repair projects requiring a crash strut, a custom design must be completed.

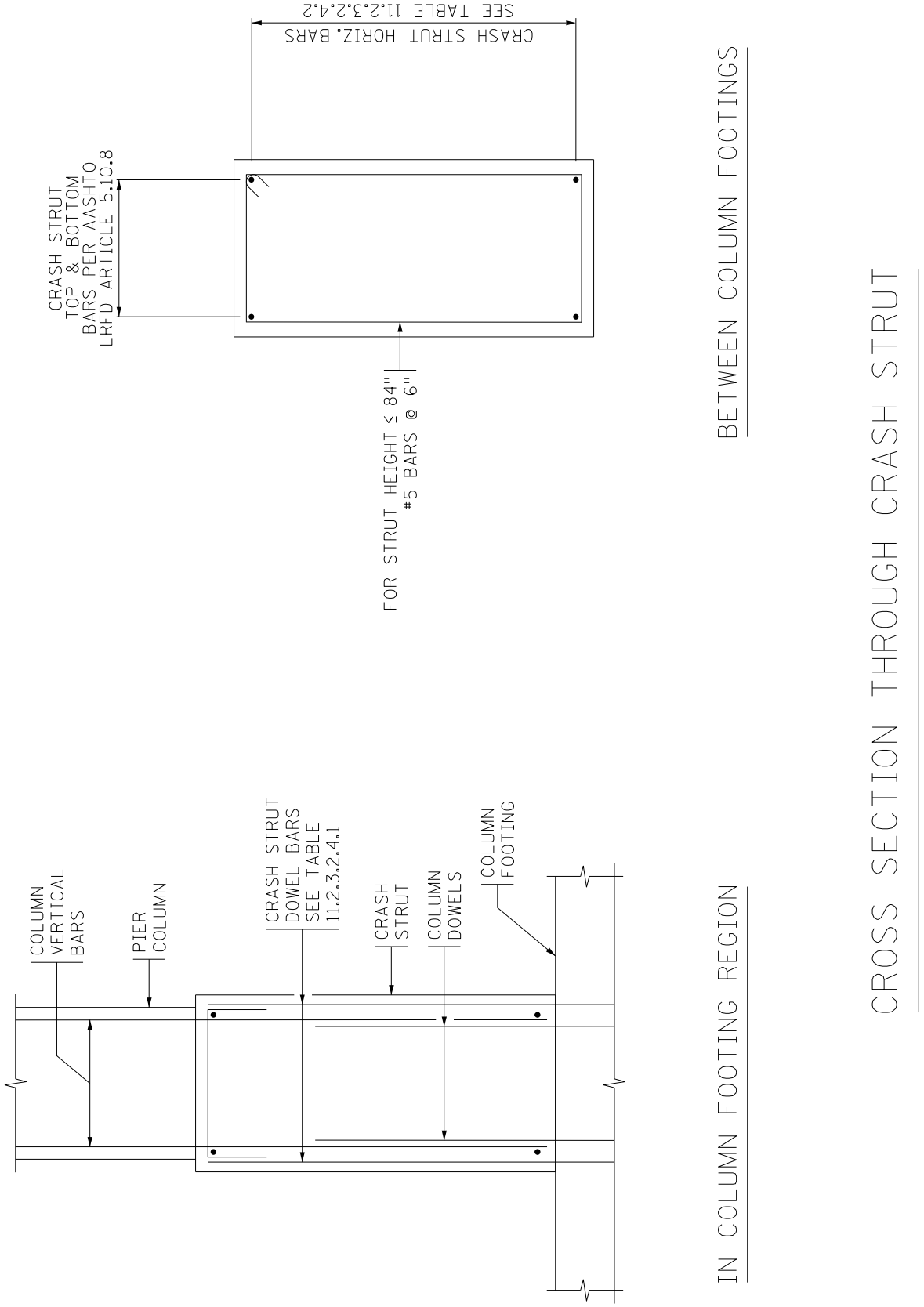

Figure 11.2.3.2.4.2

Use Table 11.2.3.2.4.1 to determine the footing to crash strut dowel reinforcement. The bar sizes and spacings were obtained by assuming that the dowel bar was fully developed at the interface of the crash strut and the top of the footing. Detail the dowel bar as necessary to ensure full development at this interface.

Table 11.2.3.2.4.1
Crash Strut Dowel Reinforcement for New Piers

Strut Height Above Top of Footing (in)	Strut Thickness (in)	Length of Column Footing L_{cs} Over Which the Crash Strut is Connected (ft)	
		7≤L≤8	L>8
≤ 84	≥ 36	#7 @ 6"	#6 @ 6"

Use Table 11.2.3.2.4.2 to determine the horizontal reinforcement for the front and back face of the crash strut. Strut span length L is equal to the distance between the footing edges. Calculate the required top and bottom face horizontal bars based on the shrinkage and crack control provisions of AASHTO LRFD Article 5.10.8.

Table 11.2.3.2.4.2
Crash Strut Horizontal Reinforcement for New Piers

Strut Span L (ft)	Minimum Strut Thickness (in)	A_s Required on Strut Front and Back Face (in^2/ft)
≤10	36	0.44
12	36	0.50
14	36	0.61
16	36	0.72
≤18	36	0.77

If the columns share a single footing and the crash strut is continuously connected to the footing, provide 0.44 in^2/ft minimum horizontal reinforcement on strut front and back face.

[5.8.2.4]
[5.8.2.5]

Shear and torsion were investigated for a 36 inch thick strut. Because shear demand exceeds 50% of V_c, and torsional forces exist, AASHTO requires minimum transverse reinforcement be provided.

For crash strut heights up to 84 inches, provide #5 stirrup bars at 6 inch spacing. If the strut height exceeds 84 inches, calculate the minimum transverse reinforcement.

11.2.3.2.5 Barrier Protection of Piers

Requirements for Test Level 5 Barrier Protection

When the TL-5 barrier protection option is used, note that it can be tied into a concrete roadway pavement or shoulder, or it can consist of a stand-alone barrier on a moment slab. The plan layout for the barrier is dependent on the pier and roadway geometrics. (See Figure 11.2.3.2.5.1. for begin/end geometric requirements.)

Where the barrier is required to run parallel to the roadway and as close as possible to the pier, a gap is required between the back of barrier and the pier to keep the collision load from directly impacting the pier. Provide a 1 inch minimum distance between the back face of the barrier and the pier column face with polystyrene to fill the gap.

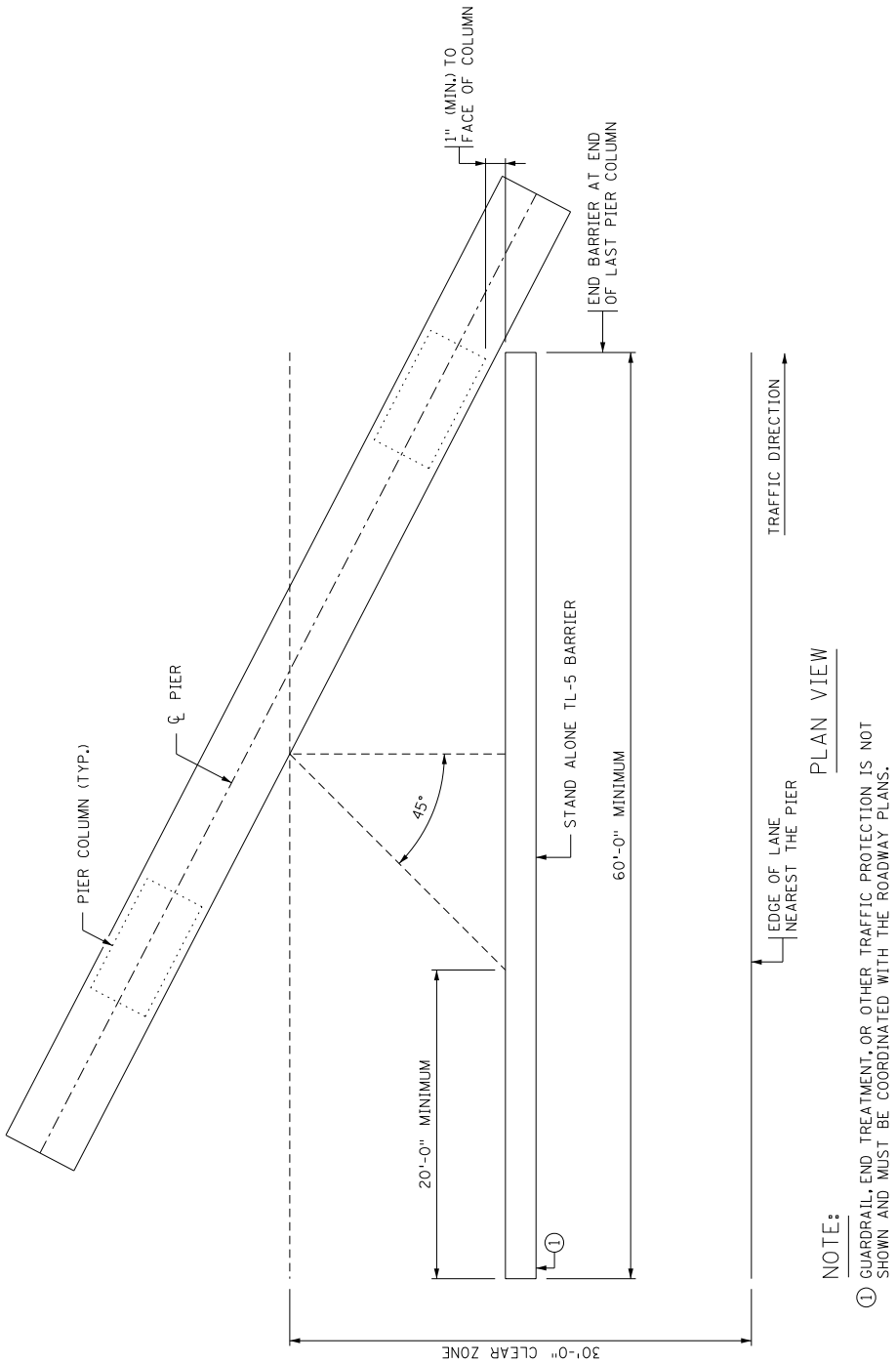

Figure 11.2.3.2.5.1
TL-5 Barrier Geometrics

11.3 Retaining Walls

The road designer will typically be responsible for leading the plan development effort for retaining walls by coordinating the wall type selection process. Several parameters must be considered for retaining wall selection and design, including:

- Height of the wall
- Geometry of the wall (curved or straight)
- Type of material retained
- Geometry of the backfill (level or sloped)
- Magnitude of live load surcharge
- Whether or not traffic barriers will be incorporated into the top of the wall (vehicle collision loads)
- Whether or not noise walls will be supported on the wall
- Location of the water table
- Quality of subgrade material (supported on spread footings or pile foundations)
- Cut or fill section
- Proximity to right of way limits

Non-standard walls, which include proprietary walls and walls not covered by available standards, require special design by the Bridge Office, a proprietary wall system engineer, or a consultant engineer. The Bridge Office has the responsibility for evaluating the structural design methodology of non-standard walls designed outside of the Bridge Office.

11.3.1 Cantilever Retaining Walls

In many cases, a conventional reinforced concrete retaining wall is the appropriate solution for a project. For wall heights up to 30 feet with level fill and up to 27 feet with live load surcharge or sloped fill with 1V:2H, use standard details. MnDOT standard cantilever retaining wall designs and details (*Roadway Standard Plans*, Fig. 5-297.620 through 5-297.639) are available for download at:

http://standardplans.dot.state.mn.us/StdPlan.aspx

For new wall designs that fall outside the limits of the MnDOT standards, limit the settlement of the footing to a maximum of 1 inch.

[11.6.3.3]

The current MnDOT LRFD Cast-In-Place Retaining Wall Standards were designed using the 2010 AASHTO LRFD code, for which the maximum eccentricity for foundations on soil is B/4. In the 2012 AASHTO LRFD Bridge Design Specifications, the maximum eccentricity for foundations on soil was changed to B/3. For new designs that fall outside the limits of the MnDOT standards, follow the current AASHTO requirements.

Refer to *Roadway Standard Plans,* Fig. 5-297.639 for the full basis of design for the cast-in-place retaining wall standards.

[11.6.3.2]
[10.6.5]

For bearing checks, determine all bearing stresses using a rectangular distribution when the wall foundation is supported on soil. When the wall foundation is supported on rock, use a trapezoidal bearing stress distribution for bearing checks. For structural design of the footing, regardless of soil or rock support, always use a trapezoidal bearing stress distribution.

11.3.2 Counterfort Retaining Walls

Counterfort retaining walls may be economical for wall heights over 40 feet. Counterfort walls are designed to carry loads in two directions. Earth pressures are carried laterally with horizontal reinforcing to thickened portions of the wall. The thickened portion of the wall contains the counterfort, which is designed to contain vertical reinforcement that carries the overturning loads to the foundation.

11.3.3 Anchored Walls

General

Anchored walls employ earth anchors, vertical wall elements and facing. Anchored walls are used when the height of the earth to be retained by the wall is considerable and/or when all other types of retaining walls prove to be uneconomical. Anchored walls may be considered for both temporary and permanent support of stable and unstable soil and rock masses. In order to reduce the section of the stem, an anchoring system is provided at the back of the wall. Anchoring is typically accomplished by embedding a concrete block "dead man" in earth fill and connecting it to the stem of the wall with anchor rods. Alternatively, the anchors may be incorporated into soil nails or rock bolts. The feasibility of using anchored walls should be evaluated on a case-by-case basis after all other types of retaining walls have been ruled out as an option.

Design and Construction Requirements

Meet the current safety and movement requirements of Section 11.9 of the *AASHTO LRFD Bridge Design Specifications*.

Construction shall be in accordance with the *MnDOT Standard Specifications for Construction* and Section 7 of the *AASHTO LRFD Bridge Construction Specifications*.

11.3.4 Prefabricated Modular Block Walls

General

Prefabricated modular block walls (PMBW) are gravity walls made of interlocking soil-filled concrete or steel modules or bins, rock filled gabion baskets, precast concrete units, or modular block units without soil reinforcement.

Prefabricated modular walls shall not be used under the following conditions:

- On curves with a radius of less than 800 feet, unless the curve could be substituted by a series of chords
- Steel modular systems shall not be used where the ground water or surface runoff is acid contaminated or where deicing spray is anticipated.
- Exposed heights greater than 8 feet.

Design and Construction Requirements

The design shall meet the current safety and movement requirements of Article 11.11 of the *AASHTO LRFD Bridge Design Specifications* and the MnDOT Division S Special Provision Boiler Plate *(2411) PREFABRICATED MODULAR BLOCK WALL (PMBW) WITH AND WITHOUT SOIL REINFORCEMENT*. The special provision can be downloaded from:

http://www.dot.state.mn.us/pre-letting/prov/index.html

The construction shall be in accordance with the *MnDOT Standard Specifications for Construction* and Section 7 of the *AASHTO LRFD Bridge Construction Specifications*.

11.3.5 Mechanically Stabilized Earth Walls

General

Mechanically stabilized earth walls are reinforced soil retaining wall systems that consist of vertical or near vertical facing panels, metallic or polymeric tensile soil reinforcement, and granular backfill. The strength and stability of mechanically stabilized earth walls is derived from the composite response due to the frictional interaction between the reinforcement and the granular fill. Mechanically stabilized earth systems can be classified according to the reinforcement geometry, stress transfer mechanism, reinforcement material, extensibility of the reinforcement material, and the type of facing. MnDOT uses three major types of mechanically stabilized earth walls, categorized by facing type:

1. Precast Concrete Panel (MSE) Walls: An MSE wall, in MnDOT terminology, refers to the precast concrete panel walls. Technical Memorandum No. 14-02-B-01 must be used for design and

construction of these walls. An approved list of MSE wall systems is available from the Bridge Office website.

MSE walls may be used in lieu of conventional gravity, cantilever, or counterfort retaining walls. MSE walls offer some advantages when settlement or uplift is anticipated. In some cases, MSE walls offer cost advantages at sites with poor foundation conditions. This is primarily due to the costs associated with foundation improvements such as piles and pile caps that may be required to support conventional wall systems.

In general, MSE walls **shall not** be used where:

- Two walls meet at an angle less than 70°.
- There is scour or erosion potential that may undermine the reinforced fill zone or any supporting footing.
- Walls have high curvature (radius less than 50 feet).
- Soil is contaminated by corrosive material such as acid mine drainage, other industrial pollutants, or any other condition which increases corrosion rate such as the presence of stray electrical currents.
- Sites where extensive excavation is required or sites that lack granular soils and the cost of importing suitable fill material may render the system uneconomical.
- Walls are along shorelines and are exposed to the water.
- Retaining walls support roadways unless an impervious layer is placed below the roadway surface to drain any surface water away from the reinforcement.
- There is potential for placing buried utilities within the reinforced zone.

The design of precast panel MSE walls shall meet all the requirements of the MSE Wall Technical Memorandum.

2. Modular Block Walls (MBW): The facing for this wall is made of small, rectangular dry-cast concrete units that have been specially designed and manufactured for retaining wall applications. For use of MBW, please refer to the MnDOT Technical Memorandum No. 14-03-MAT-01. MBW standard designs are shown in the Roadway Standard Plans (5-297.640, 641, 643, 644, and 645), which are available for download at:

   http://standardplans.dot.state.mn.us/StdPlan.aspx

3. Prefabricated Wet Cast Modular Block Walls & Gabion Baskets with Earth Reinforcement: These walls are the same as described in

Article 11.3.4 except they have earth reinforcement which makes them a hybrid of a gravity wall and a MSE wall. These types of systems must be pre-qualified by the Structural Wall Committee (SWC). The maximum wall height for these walls will be set by the SWC as part of the prequalification process. The design shall meet the requirements of the MnDOT Division S Special Provision Boiler Plate *(2411) PREFABRICATED MODULAR BLOCK WALL (PMBW) WITH AND WITHOUT SOIL REINFORCEMENT*. The special provision can be downloaded from:

http://www.dot.state.mn.us/pre-letting/prov/index.html

Prefabricated modular walls with earth reinforcement shall not be used in the following applications:

i. Walls supporting bridges.
ii. Anticipated differential settlement exceeds 1/200 of the wall length.

Bidding information for prefabricated modular walls with earth reinforcement requires the preparation of plans that contain all necessary information for location and alignment including cross sections, plans, and profiles. Locations of utilities or other features impacting the design or construction must also be shown. The balance of the details necessary for construction shall be provided by the vendor via the contractor as described in the special provisions.

11.3.6 Noise Barriers

Standard designs for noise barriers are covered in MnDOT Roadway Standard Plan 5-297.661. The standard plans contain detailed designs of wood planking noise barrier with concrete posts.

The panel supports used in the standard plans consist of either prestressed concrete or reinforced concrete posts.

The *MnDOT Road Design Manual* provides further information about MnDOT design and use procedures for noise barriers.

The following factors must be considered in non-standard noise barrier designs:

1. Foundation material properties such as bearing capacity, internal angle of friction, and compressibility characteristics of the surrounding soil or rock.
2. Possible ground movement.
3. Anticipated future excavation activity adjacent to the foundation.
4. Ground water level.

5. Extent of frost penetration.
6. Extent of seasonal volume changes of cohesive soils.
7. The proximity and depth of adjacent structure foundations.
8. Overall ground stability, particularly adjacent to cut or fill slopes.
9. Material properties:

   Timber planking reference bending stress F_b = 1400 psi
   Other timber reference bending stress F_b = 1200 psi
   Reinforced concrete post f'_c = 4000 psi
   Prestressed concrete post design criteria:

Number of Strands	f'_{ci} (psi)	f'_c (psi)
6 or less	4000	5500
7 or more	4000	6000

10. Noise Barrier Loadings: Design of noise barrier systems shall include consideration of a variety of design loads. All possible load combinations shall be considered in the design. Such loads include:
    - Dead Load - The barrier self-weight must be considered. Weight considerations are particularly critical in the design of structure-mounted barriers and may require modifications to the structure design. Lightweight barrier materials are often utilized in situations where existing or proposed structures can accommodate only a limited amount of additional weight. Ice loads represent a special type of dead load caused by water freezing and building up on exposed barrier surfaces.
    - Wind Load - Wind loads vary with geographic location and can be influenced by elevation in relation to existing topography. They affect the overturning moment or rotational force placed upon the barrier, its foundation, and/or the structure to which the barrier is attached. Wind load shall meet the requirements of Section 15 of the *AASHTO LRFD Bridge Design Specifications*.
    - Snow Loads - In barrier design, snow considerations relate to horizontal forces of both plowed and stored snow which can be placed against the vertical surface of the barrier. In designing the barrier to accommodate such loadings, consider the area available for safe storage of plowed snow as well as the relationship (both horizontally and vertically) of the barrier to the snow removal equipment.
    - Earth Loads - In some areas, the ground elevation on both sides of the noise barrier differs and the barrier must be

designed to retain soil. Consider the possible settlement and erosion of soil on the low side of the noise wall and soil accumulation on the retained side by adding 1 foot to the design retained height of soil.

- Impact Loads - Impact loads can be classified as loads placed on the barrier due to errant vehicles and airborne debris. Apply vehicular collision forces in the design of the wall in accordance with Article 15.8.4 of the AASHTO Bridge Design Specifications. Placement of a noise barrier on a structure is usually restricted to the structure's parapet. In such cases, options for barrier mounting to the parapet (either top or face mounting) should consider the potential for impact, including the potential impact from a truck tilting into the noise barrier after hitting the protective barrier. Airborne debris loading due to retreads, stones, vehicle parts, etc., should also be considered.

11. Foundation and structural design for noise barriers shall be conducted in accordance with Section 15 of the most current *AASHTO LRFD Bridge Design Specifications*.

11.3.7 Cantilevered Sheet Pile Walls

General

Cantilever sheet piling is used in many ways on bridge projects. Most often it is used to contain fill on a temporary basis for phased construction activities, as when existing embankments need protection or new embankments need to be separated from existing facilities during construction. Temporary sheet piling is also used in the construction of cofferdams. Sheet piling with concrete facing is also sometimes used in permanent wall construction.

Most often hot-rolled steel sheet piling is used for cantilevered sheet pile walls. Hot-rolled sections are available from domestic and foreign sources. Note that securing new domestic material may require a significant lead time, so check availability.

Temporary Sheet Piling

Design temporary sheet piling in accordance with the current *AASHTO Guide Specifications for Bridge Temporary Works*, and this article. Use elastic section properties for design.

For many temporary applications, new material is not required and the contractor may have a supply of used sections.

For temporary applications that are insensitive to water filtration through the interlocks, cold formed sections may be used. For railway applications, confirm with the railroad whether cold-formed sections are allowed. When cold-formed sections are used, use a reduced yield strength equal to $0.83F_y$ to account for locked in stresses due to forming.

When an anchored wall design is required, or when significant quantities of sheet piling are anticipated (discuss with the Regional Bridge Construction Engineer to determine what is considered significant), design the wall and provide the details in the bridge plans. Include the required section modulus and tie back forces. In addition, include a lump sum pay item for the temporary sheet piling.

For most other instances, the amount and design of sheet piling used will depend on the contractor's operations. When it is anticipated that sheet pile will likely be used, show the approximate location of the sheet pile wall in the plan along with the following construction note: Payment for sheet piling shall be considered incidental to other work.

Payment for sheet piling used for typical foundation excavations is described in the standard special provisions developed for structure excavation and foundation preparation and need not be shown in the plans.

For temporary sheet piling without anchors, the deflection limit is the lesser of 1.5 inches or 1% of the exposed height. For sheet piling with anchors, the deflection limit is set to 1.0 inch. This limit may be reduced when circumstances require tighter control.

Permanent Sheet Piling

Design permanent sheet piling in accordance with the current *AASHTO LRFD Bridge Design Specifications* and this article. Use elastic section properties for design.

Do not use sheet piling for permanent wall in highly corrosive areas, defined as areas with pH < 5 or ph > 10. For non-corrosive to moderately corrosive soil ($5 \leq pH \leq 10$), use an effective section modulus for design determined by subtracting 0.08 inches of assumed corrosion loss (for a service life of 75 years) from the sheet pile thickness and then computing the section modulus.

For permanent sheet piling without anchors, the deflection limit is the lesser of 1.0 inch or 1% of the exposed height. For sheet pile with anchors, the deflection limit is set to 1.0 inch.

For settlement sensitive structures or where roadway pavement must be retained, the deflection limit may need to be reduced to 0.25% of the exposed height. Factors affecting the amount of reduction on the deflection limit include the following:

1. Whether existing roadway/structure integrity must be maintained.
2. Distance of wall from existing roadway or structures.
3. Type of existing roadway.
4. Height of wall or depth of excavation in front of the wall.
5. Soil type retained by the wall and to some degree the type of soil removed from in front of the wall.
6. Material and geometric properties of the wall.
7. The wall system's ability to undergo distortion & retain functionality.
8. Construction sequencing with regards to refurbishing/repaving the existing roadway relative to construction of wall.

11.4 Design Examples

Section 11 concludes with three design examples. The examples are a high parapet abutment supported on piling, a retaining wall supported on a spread footing, and a three column pier.

11.4.1 High Parapet Abutment Design Example

This example illustrates the design of a high parapet abutment using the following procedure:

- Determine material and design parameters
- Determine loads and load combinations
- Design abutment piling
- Design abutment pile footing
- Design abutment stem and backwall
- Design wingwalls

The design parameters for the example include the following:

1) This example is a continuation of the prestressed I-beam and fixed bearing design examples found in Articles 5.7.2 and 14.8.1, respectively, of this manual. The superstructure consists of a 9” deck on six MN63 beams with a beam spacing of 9’-0” and no skew.
2) The abutment is supported on 12-inch diameter cast-in-place piling. The footing elevation was set to provide a minimum cover of 4'-6". The stem was set at the standard 4'-6" thickness to provide a 3'-0" wide seat and a 1'-6" thick backwall. Assuming a 1" minimum concrete bearing pedestal at the front of the backwall, a 3.25" bearing, a 4.75" stool height, and a 0.02 ft/ft cross slope, an average backwall height of 5’-9” was chosen for design.
3) The abutment supports half of a 20'-0" long approach panel which is 1'-0" thick. The approach panel supports a 20’-0” long concrete barrier on each side. Also, an abutment end block which measures 1'-4" wide by 1’-4” high is attached at the top of the backwall.

A typical cross-section for the abutment is provided in Figure 11.4.1.1. Other material and design parameters are presented in Table 11.4.1.1.

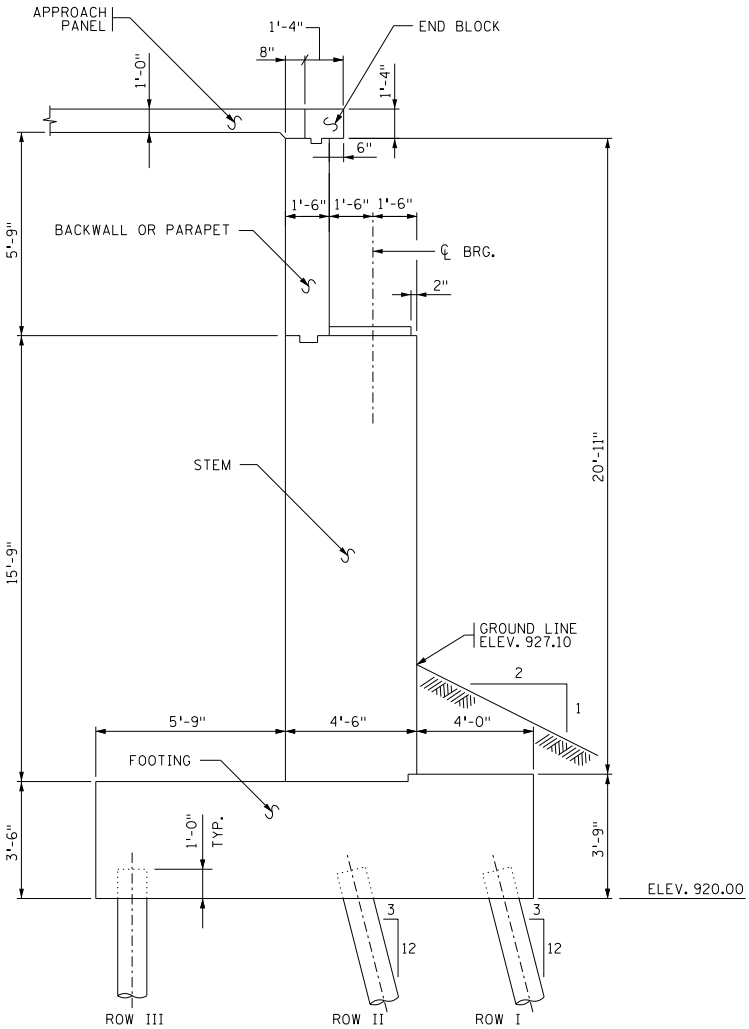

Figure 11.4.1.1

Table 11.4.1.1 Design Data

Unit Weights	Soil	0.120 kcf
	Reinforced Concrete	0.150 kcf
Concrete	Compressive Strength, f'_c	4.0 ksi
	Crack Control Exposure Factor γ_e	1.00
Reinforcement	Modulus of Elasticity, E_S	29,000 ksi
	Yield Strength, f_y	60 ksi

A. Evaluate Pile Bearing Capacity

The Bridge Construction Unit's foundation recommendations are referenced at the start of final design. The recommendations identify the pile type and factored pile bearing resistance to be used in design:

- Pile Type: 12" diameter x ¼" cast-in-place concrete
- Factored Pile Bearing Resistance, ϕR_n = 100 tons/pile
  = 200 kips/pile

Figure 11.4.1.2 shows a plan view of the abutment and includes an assumed pile layout for the example. Pile rows I, II and III each contain eight piles. Generally, try to avoid pile layouts that permit individual piles to go into tension.

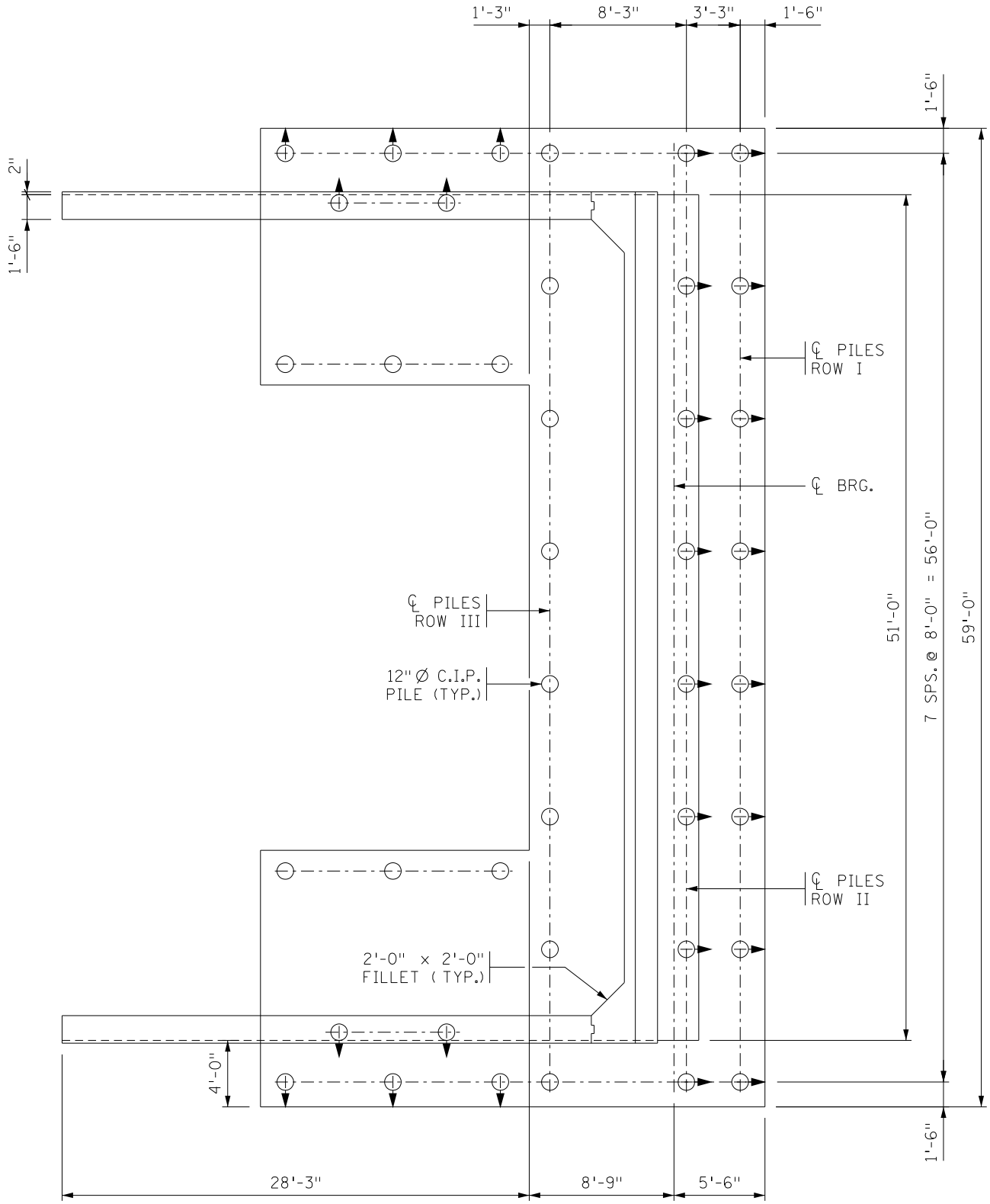

Figure 11.4.1.2

B. Permanent Loads (DC & EV)

Calculate the unfactored dead loads:

Superstructure Dead Load:

The vertical reaction is taken from Table 5.7.2.4 of the prestressed I-beam example:

$$P_{super} = 156 \cdot (6 \text{ girders}) = 936.0 \text{ kips}$$

Backwall:

$$P_{bw} = 0.150 \cdot 1.50 \cdot 5.75 \cdot 51 = 66.0 \text{ kips}$$

Stem:

$$P_{st} = 0.150 \cdot 4.5 \cdot 15.75 \cdot 51 = 542.2 \text{ kips}$$

Beam Seat Pedestals:

Assuming pedestals are 3.5 feet wide with an average height of 3 inches,

$$P_{ped} = 0.150 \cdot 2.83 \cdot 3.50 \cdot 0.25 \cdot 6 = 2.2 \text{ kips}$$

Footing:

To simplify load calculations, weight of the step under the stem is included with the stem.

$$P_f = 0.150 \cdot (3.5 \cdot 10.25 + 3.75 \cdot 4) \cdot 59 = 450.2 \text{ kips}$$

Approach Panel:

Assuming half the load is carried by the abutment,

$$P_{ap} = 0.150 \cdot 1 \cdot 20 \ / \ 2 \cdot 48 = 72.0 \text{ kips}$$

Abutment End Block:

$$P_{eb} = 0.150 \cdot 1.33 \cdot 1.33 \cdot 51 = 13.5 \text{ kips}$$

Wingwall DL:

Include the dead load only from that portion of the wingwall that lies on the 5'-9" heel of the abutment footing. The rest of the wingwall dead load will be incorporated into the wingwall design as it is resisted by the wingwall. The corner fillet weight is minimal and can be neglected.

$$P_{wing} = 0.150 \cdot 2 \cdot 1.50 \cdot 5.75 \cdot (15.75 + 5.75 + 1.00) = 58.2 \text{ kips}$$

Barrier DL:

The barrier on the deck is already accounted for in the superstructure dead load. Only include the additional barrier load located on the end block and approach panel or wingwalls. In this case, the barrier is located on the approach panel.

$$P_{apbar} = 0.439 \cdot 2 \cdot (0.5 \cdot 20 + 1.33) = 9.9 \text{ kips}$$

Summing the dead loads,

P_{DC} = 936.0+66.0+542.2+2.2+450.2+72.0+13.5+58.2+9.9
= 2150.2 kips

Calculate the unfactored vertical earth pressure (EV) of fill above the footing:

On the Heel:

$$P_{EV(heel)} = 0.120 \cdot (15.75 + 5.75) \cdot 5.75 \cdot 48 = 712.1 \text{ kips}$$

On the Toe:

$$P_{EV(toe)} = 0.120 \cdot [(3.35 + 1.35) \ / \ 2] \cdot 4 \cdot 59 = 66.6 \text{ kips}$$

C. Earth Pressure (EH) [3.11.5]

The active earth pressure values used for the equivalent fluid method (described in LRFD Article 3.11.5.5) range from 0.030 kcf to 0.040 kcf. Assuming a level backfill, MnDOT practice is to use:

γ_{eq} = 0.033 kcf

The respective horizontal active earth pressures at the top and bottom of the abutment are:

P_{top} = 0 ksf

P_{bottom} = γ_{eq}· h = 0.033 · 25.00 = 0.825 ksf

$$P_{EH} = 0.5 \cdot 0.825 \cdot 25.00 \cdot 48 = 495.0 \text{ kips}$$

The force acts at a location of $^1/_3$ times the height of the load:

$$\text{arm} = \frac{25.00}{3} = 8.33 \text{ ft}$$

Passive earth pressure in front of the abutment is neglected in the design.

D. Live Load Surcharge (LS) [3.11.6]

The live load surcharge is applied to the abutment during construction. It represents construction activity on the fill behind the abutment prior to construction of the approach panel.

$$\Delta_P = \gamma_{eq} \cdot h_{eq}$$

From Table 3.11.6.4-1, since the height of soil for vehicular loads is greater than 20 feet, use a surcharge height of 2.0 feet.

$$\Delta_P = 0.033 \cdot 2.0 = 0.066 \text{ kips/ft}^2$$

MnDOT practice is to use a 12.0 foot width in determining the live load surcharge for abutments that are less than 100.0 feet in length along the skew. This is equal to the surcharge from a single lane of vehicular live load.

Horizontal Resultant of LS is:

$$P_{LS} = 0.066 \cdot 25.00 \cdot 12 = 19.8 \text{ kips}$$

The force acts at a location of $^1/_2$ times the height of the load:

$$\text{arm} = \frac{25.00}{2} = 12.50 \text{ ft}$$

E. Live Load (LL)

The maximum live load reaction without dynamic load allowance can be determined using Table 3.4.1.2 from this manual. For a 137 foot span:

$$R_{LL} = 66.8 + 41.6 + \frac{7}{10} \cdot (67.2 - 66.8 + 44.8 - 41.6) = 110.9 \text{ kips/lane}$$

Coincident with live load on the superstructure, lane loading is applied to the approach panel. Use the same distribution that was used for dead load (assume that one half of the total load is carried by the abutment and the other half is carried in direct bearing to the subgrade away from the abutment):

$$R_{LLapp} = 0.64 \cdot 20 \cdot \frac{1}{2} = 6.4 \text{ kips/lane}$$

[Table 3.6.1.1.2-1]

For maximum loading, four lanes of traffic are placed on the superstructure and approach panel. The multiple presence factor for more than 3 design lanes is 0.65. For simplicity, add the live load from the approach panel to the live load from the superstructure and apply the total at the centerline of bearing:

$$P_{LL} = (110.9 + 6.4) \cdot 4 \cdot 0.65 = 305.0 \text{ kips}$$

Figure 11.4.1.3 summarizes the loads and includes moment arms in parentheses measured from the toe of the footing. The loads, moment arms, and moments are also tabulated in Tables 11.4.1.2 and 11.4.1.3.

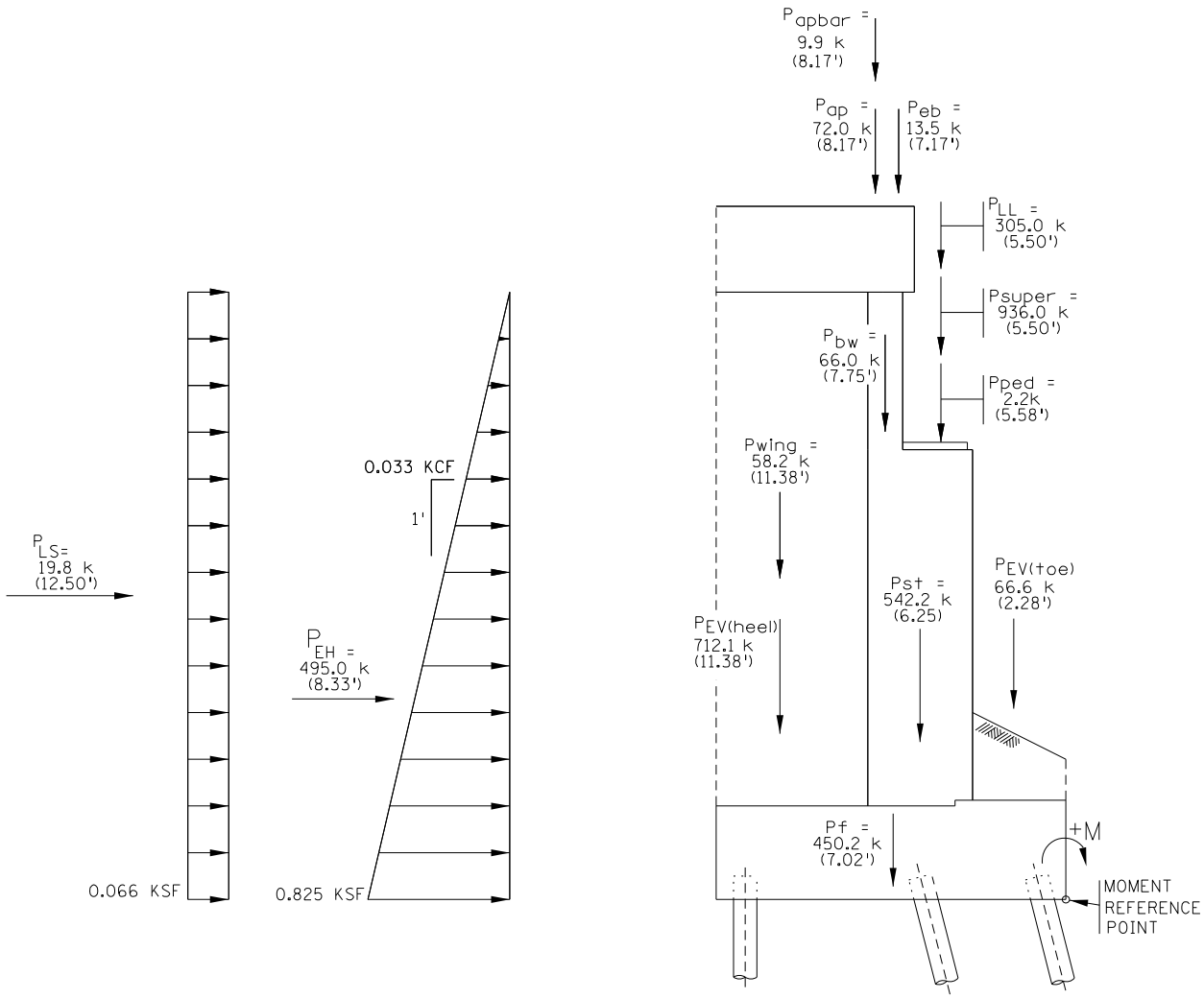

Figure 11.4.1.3

Table 11.4.1.2 Unfactored Vertical Load Components and Moments about Toe of Footing

	Load	Label	P (kips)	Distance To Toe (ft)	Moment About Toe (kip-ft)
DC	Superstructure DL	P_{super}	936.0	-5.50	-5148.0
	Backwall	P_{bw}	66.0	-7.75	-511.5
	Stem	P_{st}	542.2	-6.25	-3388.8
	Beam Seat Pedestals	P_{ped}	2.2	-5.58	-12.3
	Footing	P_f	450.2	-7.02	-3160.4
	Approach Panel	$P_{ap.}$	72.0	-8.17	-588.2
	End Block	P_{eb}	13.5	-7.17	-96.8
	Wingwall	P_{wing}	58.2	-11.38	-662.3
	Barrier	P_{apbar}	9.9	-8.17	-80.9
		Total	**2150.2**		**-13,649.2**
EV	Backfill on Heel	$P_{EV(heel)}$	712.1	-11.38	-8103.7
	Fill on Toe	$P_{EV(toe)}$	66.6	-2.28	-151.8
		Total	**778.7**		**-8255.5**
LL	Live Load	P_{LL}	305.0	-5.50	-1677.5

Table 11.4.1.3 Unfactored Horizontal Load Components and Moments about Bottom of Footing

Load			H (kips)	Distance to Toe (ft)	Moment About Toe (kip-ft)
Type	Description	Label			
EH	Horizontal Earth Load	P_{EH}	495.0	8.33	4123.4
LS	Live Load Surcharge	P_{LS}	19.8	12.50	247.5

F. Select Applicable Load Combinations and Factors For Pile Design [1.3.3 - 1.3.5] [3.4.1]

The following load modifiers will be used for this example:

Load Modifier Type	Strength	Service
Ductility, η_D	1.0	1.0
Redundancy, η_R	1.0	1.0
Importance, η_I	1.0	n/a
$\eta = \eta_D \cdot \eta_R \cdot \eta_I$	1.0	1.0

Assemble the appropriate load factor values to be used for each of the load combinations. Load combinations for the Strength I limit state are used. The load cases considered for the design example are:

Strength I: Construction Case 1

$0.90 \cdot DC + 1.00 \cdot EV + 1.50 \cdot EH + 1.75 \cdot LS$

For this construction case, DC does not contain any dead load from the superstructure, approach panel, or abutment end block. It also assumes that the abutment is backfilled prior to superstructure erection.

Strength I: Construction Case 2

$1.25 \cdot DC$

For this construction case, DC includes the superstructure but does not include the approach panel. It assumes the superstructure is erected prior to the abutment being backfilled.

Strength I: Final Case 1

$1.25 \cdot DC + 1.35 \cdot EV + 0.90 \cdot EH + 1.75 \cdot LL$

This load case represents the completed structure with the minimum load factor for the horizontal earth pressure load.

Strength I: Final Case 2

$1.25 \cdot DC + 1.35 \cdot EV + 1.50 \cdot EH + 1.75 \cdot LL$

This load case represents the completed structure with the maximum load factor for the horizontal earth pressure load.

Table 11.4.1.4 contains the load factors that are used for each load component for each load case.

Table 11.4.1.4 – Load Factors

Load	Load Component	Load Combination			
		Strength I: Constr. 1	Strength I: Constr. 2	Strength I: Final 1	Strength I: Final 2
DC	P_{super}	-	1.25	1.25	1.25
	P_{bw}	0.90	1.25	1.25	1.25
	P_{st}	0.90	1.25	1.25	1.25
	P_{ped}	0.90	1.25	1.25	1.25
	P_f	0.90	1.25	1.25	1.25
	P_{ap}	-	-	1.25	1.25
	P_{eb}	-	1.25	1.25	1.25
	P_{wing}	0.90	1.25	1.25	1.25
	P_{apbar}	-	-	1.25	1.25
EV	$P_{EV(heel)}$	1.00	-	1.35	1.35
	$P_{EV(toe)}$	1.00	-	1.35	1.35
EH	P_{EH}	1.50	-	0.90	1.50
LS	P_{LS}	1.75	-	-	-
LL	P_{LL}	-	-	1.75	1.75

G. Design Piles [10.7.1.5]

Table 11.4.1.5 lists the net vertical, horizontal, and moment forces that are applied to the pile group for each of the four load combinations.

Table 11.4.1.5 – Force Resultants

	Vertical Load P (kips)	Horizontal Load H (kips)	Moment about Toe M_{toe} (kip-ft)
Strength I: Construction Case 1	1786	777	-8599
Strength I: Construction Case 2	2585	0	-16,225
Strength I: Final Case 1	4273	446	-27,431
Strength I: Final Case 2	4273	743	-24,957

Check Vertical Capacity of Pile Group

Determine the properties of the pile group. These properties include the number of piles, the location of the centroid or neutral axis with respect to the toe, and the moment of inertia of each pile row.

Table 11.4.1.6 – Pile Group Properties

Pile Group Properties	Row Number			Sum
	I	II	III	
Piles Per Row N	8	8	8	24
Distance to Toe d_{toe} (ft)	1.50	4.75	13.00	
$N \cdot d_{toe}$ (ft)	12.00	38.00	104.00	154.00
Neutral Axis of Pile Group to Toe X_{NA} (ft)	$(\Sigma N \cdot d_{toe}) / \Sigma N$			6.42
Distance from Neutral Axis to Pile Row c (ft)	4.92	1.67	-6.58	
$I = N \cdot c^2$ (ft^2)	193.7	22.3	346.4	562.4

Using solid mechanics equations adapted for discrete elements, the forces in the pile rows for different load combinations are determined.

The force in each pile row is found using:

$$\text{Pile load} = \frac{P}{N} + \frac{M_{NA} \cdot c}{I}$$

First, the moment about the toe must be translated to get the moment about the neutral axis of the pile group. For Strength I: Construction Case I, the eccentricity about the toe is

$$e_{toe} = M_{toe} / P = -8599 / 1786 = -4.81 \text{ ft}$$

Then the eccentricity about the neutral axis of the pile group is

$$e_{NA} = x_{NA} + e_{toe} = 6.42 - 4.81 = 1.61 \text{ ft}$$

The moment about the neutral axis of the pile group becomes

$$M_{NA} = P \cdot e_{NA} = 1786\,(1.61) = 2875 \text{ kip} - \text{ft}$$

Then $\text{Pile Load}_{RowI} = 1786/24 + 2875 \cdot 4.92/562.4 = 99.6 \text{ kips/pile}$

$$\text{Pile Load}_{RowII} = 1786/24 + 2875 \cdot 1.67/562.4 = 83.0 \text{ kips/pile}$$

$$\text{Pile Load}_{RowIII} = 1786/24 + 2875 \cdot (-6.58)/562.4 = 40.8 \text{ kips/pile}$$

The same calculations were carried out for the other load cases.

A summary of M_{NA} and the pile loads are provided in Table 11.4.1.7.

Table 11.4.1.7 – Factored Pile Loads

Load Combination	Eccentricity about toe e_{toe} (ft)	Eccentricity about N.A. e_{NA} (ft)	Moment about N.A. of pile group M_{NA} (kip-ft)	Pile Loads P_u (kips/pile)		
				Row I	Row II	Row III
Strength I: Construction Case 1	-4.81	1.61	2875	99.6	83.0	40.8
Strength I: Construction Case 2	-6.00	0.42	1086	117.2	110.9	95.0
Strength I: Final Case 1	-6.42	0.00	0	178.0	178.0	178.0
Strength I: Final Case 2	-5.84	0.58	2478	199.7	185.4	149.0

The largest pile load P_u occurs in Row I:

$P_u = 199.7 \text{ kips} < 200 \text{ kips}$ <u>OK</u>

The reduction in maximum pile bearing resistance due to the 3:12 pile batter is minimal and can be ignored.

Therefore, the pile layout is considered satisfactory for bearing.

Check Lateral Capacity of Pile Group

The maximum factored horizontal load from Table 11.4.1.5 is

H = 777 kips

From Table 10.2.1 of this manual, assume a factored horizontal resistance, ϕR_{nh} of 24 kips/pile plus the resistance due to the two rows of battered piles.

$$\phi R_{nh} = 24\,(24) + [8\,(99.6) + 8\,(83.0)]\left(\frac{3}{\sqrt{3^2 + 12^2}}\right) = 930 \text{ kips}$$

$\phi R_{nh} = 930 \text{ kips} > 777 \text{ kips}$ <u>OK</u>

Pile Load Table for Plan

Piles are driven until the field verification method used indicates the pile has reached refusal or the required nominal pile bearing resistance indicated in the plan. The pile bearing resistance is verified in the field

using either the MnDOT Pile Formula 2012 (MPF12) or the Pile Driving Analyzer (PDA) as described in Article 10.2 of this manual. Designers must calculate the required nominal pile bearing resistance for the controlling load and show it in the plan using the Standard Plan Note table for abutments with piling (see Appendix 2-H of this manual).

For Strength I: Final Case 2,

$$P_{LL} = 1.75\left(305.0\right) = 533.8 \text{ kips}$$

$$M_{LL} = 1.75\left(-1{,}677.5\right) = -2{,}935.6 \text{ kip - ft}$$

$$e_{toe,\,LL} = \frac{M_{LL}}{P_{LL}} = \frac{-2935.6}{533.8} = -5.50 \text{ ft}$$

$$e_{NA,\,LL} = x_{NA} + e_{toe,\,LL} = 6.42 - 5.50 = 0.92 \text{ ft}$$

$$M_{NA,LL} = P_{LL} \cdot e_{NA,LL} = 533.8\left(0.92\right) = 491.1 \text{kip - ft}$$

$$\text{Pile Load}_{\text{Row I, LL}} = 533.8/24 + 491.1\left(4.92\right)/562.4 = 26.5 \text{ kips / pile}$$
$$= 13.3 \text{ tons/pile}$$

$$\text{Pile Load}_{\text{Row I, DL}} = 199.7 - 26.5 = 173.2 \text{ kips / pile}$$
$$= 86.6 \text{ tons/pile}$$

The final results to be shown in the plan are:

ABUTMENT COMPUTED PILE LOAD – TONS/PILE	
FACTORED DEAD LOAD + EARTH PRESSURE	86.6
FACTORED LIVE LOAD	13.3
* FACTORED DESIGN LOAD	99.9

* BASED ON STRENGTH I LOAD COMBINATION.

ABUTMENT REQUIRED NOMINAL PILE BEARING RESISTANCE FOR CIP PILES R_n – TONS/PILE		
FIELD CONTROL METHOD	Φ_{dyn}	$*R_n$
MNDOT PILE FORMULA 2012 (MPF12) $R_n = 20\sqrt{\frac{WxH}{1000}} x \log(\frac{10}{S})$	0.50	199.8
PDA	0.65	153.7

$*$ R_n = (FACTORED DESIGN LOAD) / Φ_{dyn}

H. Check Shear in Footing

General practice is to size the thickness of footings such that shear steel is not required. Try a 42 inch thick footing with a 3 inch step at the toe.

Determine d_v

[5.8.2.9]

Based on past design experience assume the bottom mat of steel is #8 bars spaced at 12 inches (A_s = 0.79 in^2/ft). The effective shear depth of the section (d_v) is computed based on the location of the flexural reinforcement. The piling has an embedment depth of one foot. MnDOT practice is to place the bottom mat of reinforcement directly on top of piling embedded one foot or less. Therefore, of the three criteria for determining d_v, MnDOT does not use the 0.72h criterion in this case because the flexural reinforcement location is so high above the bottom of the footing.

Begin by determining the depth of flexural reinforcement:

$$d_{toe} = \text{(footing thickness)} - \text{(pile embedment)} - (d_{bar} / 2)$$
$$= 45 - 12 - 1.00/2 = 32.50 \text{ in.}$$

$$d_{heel} = 42 - 12 - 1.00/2 = 29.50 \text{ in}$$

The depth of the compression block is:

$$a = \frac{A_s \cdot f_y}{(0.85 \cdot f'_c \cdot b)} = \frac{0.79 \cdot 60}{0.85 \cdot 4 \cdot 12} = 1.16 \text{ in}$$

The effective shear depth is:

$$d_{v,toe} = d - \frac{a}{2} = 32.50 - \frac{1.16}{2} = 31.92 \text{ in}$$

$$d_{v,heel} = d - a/2 = 29.50 - 1.16/2 = 28.92 \text{ in}$$

d_v need be no less than $0.9d_e$:

For the toe, $0.9 \cdot d_e = 0.9 \cdot d_{toe} = 0.9 \cdot 32.50 = 29.25$ in

For the heel, $0.9 \cdot d_e = 0.9 \cdot d_{heel} = 0.9 \cdot 29.50 = 26.55$ in

Use $d_{v,toe}$ = 31.92 in and $d_{v,heel} = 28.92$ in

[5.13.3.6.1]
[5.8.3.2]

Check One-Way Shear in Footing

The critical section is located d_v from the face of the abutment. The center line of the Row III piles is 54 inches from the back face of abutment. Therefore, the entire load from the Row III piles contributes to shear on the critical section. Ignore the beneficial effects of the vertical earth loads and footing self weight:

$$V_{u,\text{Row III}} = \text{Pile Reaction/Pile Spacing} = 178.0/8 = 22.3 \text{ kips/ft width}$$

The center line of the Row I piles is 30 inches from the front face of abutment. Therefore, only a portion of the load from the Row I piles contributes to shear on the critical section. See Figure 11.4.1.4.

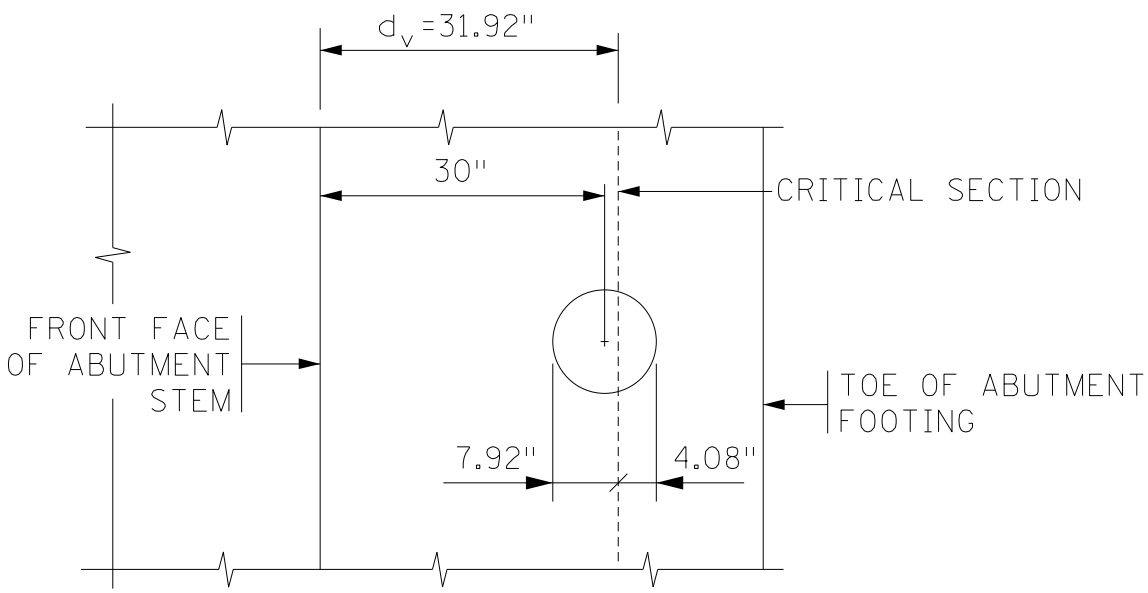

Figure 11.4.1.4
Partial Footing Plan

$$V_{u,\,Row\ I} = (\text{Pile Fraction Outside Critical Section})\left(\frac{\text{Pile Reaction}}{\text{Pile Spacing}}\right)$$

$$V_{u,Row\ I} = (4.08/12)\cdot(199.7/8.00) = 8.5 \text{ kips/ft width}$$

The shear due to the Row III piles governs.

[5.8.3.3]

There is no shear reinforcement, so the nominal shear capacity of the footing is:

$$V_n = V_c$$

An upper limit is placed on the maximum nominal shear capacity a section can carry. The maximum design shear for the footing heel is:

$$V_n = 0.25 \cdot f'_c \cdot b_v \cdot d_{v,heel} = 0.25 \cdot 4.0 \cdot 12.0 \cdot 28.92 = 347.0 \text{ kips}$$

The concrete shear capacity of a section is:

$$V_c = 0.0316 \cdot \beta \cdot \sqrt{f'_c} \cdot b_v \cdot d_v$$

[5.8.3.4.1]

The distance from the point of zero shear to the backface of the abutment x_{vo} is:

$$x_{vo} = 54.0 + 6.0 = 60.0 \text{ in}$$

$$3 \cdot d_v = 3 \cdot 28.92 = 86.8 \text{ in} > 60.0 \text{ in}$$

Therefore, $\beta = 2.0$

For a 1 ft. wide section, substituting values into V_c equation produces:

$$V_c = 0.0316 \cdot 2.0 \cdot \sqrt{4} \cdot 12 \cdot 28.92 = 43.9 \text{ kips}$$

This results in:

$$V_n = V_c = 43.9 \text{ kips} < 347.0 \text{ kips} \qquad \underline{\text{OK}}$$

Including the shear resistance factor, the shear capacity is found to be:

$$V_r = \phi V_n = 0.90 \cdot 43.9 = 39.5 \text{ kips} > 22.3 \text{ kips} \qquad \underline{\text{OK}}$$

[5.13.3.6.1]

Check Two-Way Shear in Footing

Punching of an individual pile through the abutment footing is checked next. The critical section for two-way shear is located at $0.5\,d_v$ from the perimeter of the pile. The Row I pile at the corner is the governing case because it has the largest load with the shortest length of critical section. See Figure 11.4.1.5.

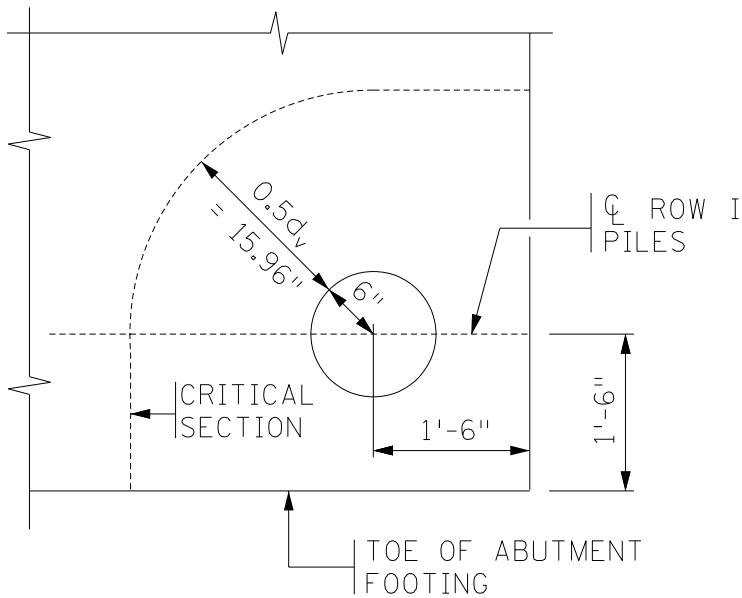

Figure 11.4.1.5
Partial Footing Plan

The length of the critical section is:

$$b_o = 18 + 0.5 \cdot \pi \cdot (15.96 + 6) + 18 = 70.5 \text{ in}$$

[5.13.3.6.3]

$$\phi V_n = \phi\left(0.126 \cdot b_o \cdot d_{v,toe}\right)$$

$$= 0.90(0.126)(70.5)(31.92)$$

$$= 255.2 \text{ kips}$$

$$V_u = \text{Row I Factored Pile Load} = 199.7 \text{ kips} < 255.2 \text{ kips} \qquad \underline{\text{OK}}$$

I. Design Footing Reinforcement

The critical section for flexure in the footing is located at the face of the stem for both the top and bottom transverse reinforcement.

1. Top Transverse Reinforcement

Design For Strength Limit State

The factored moment, M_u, for the top transverse bars is found by assuming the heel acts as a cantilever supporting its self weight and the weight of the earth resting on it. In cases where the required reinforcement to resist these loads seems excessive, the moment due to the minimum back pile reaction may be included to decrease the top mat factored moment. Use the maximum load factors for DC and EV.

The distributed load associated with the self weight of the footing heel is:

$$w_{ftg} = \gamma \cdot (\text{thickness}) \cdot (\text{width}) = 0.150 \cdot 3.5 \cdot 1.0 = 0.53 \text{ kips/ft}$$

A heel length of 5.75 feet produces a moment of:

$$M_{DC} = w_{ftg} \cdot L \cdot \frac{L}{2} = 0.53 \cdot \frac{5.75^2}{2} = 8.8 \text{ kip - ft}$$

The distributed load associated with fill on top of the footing heel is:

$$w_{EV} = 0.120 \cdot (15.75 + 5.75) \cdot 1.0 = 2.58 \text{ kips/ft}$$

The associated moment in the footing at the stem is:

$$M_{EV} = 2.58 \cdot \frac{5.75^2}{2} = 42.7 \text{ kip - ft}$$

Combining loads to determine the design moment produces:

$$M_u = 1.25 \cdot M_{DC} + 1.35 \cdot M_{EV} = 1.25 \cdot 8.8 + 1.35 \cdot 42.7 = 68.6 \text{ kip - ft}$$

Determine the depth of the flexural reinforcement (assume #8 bars):

$$d = (\text{thickness}) - (\text{cover}) - \left(\frac{d_b}{2}\right) = 42 - 3 - \frac{1.00}{2} = 38.50 \text{ in}$$

[5.7.3.2]

Solve for the required area of reinforcing steel:

$$M_r = \phi \cdot M_n = \phi \cdot A_S \cdot f_y \cdot \left[d - \frac{A_s \cdot f_y}{2 \cdot 0.85 \cdot f'_c \cdot b}\right] \geq M_u$$

Then for f'_c = 4.0 ksi and assuming that ϕ= 0.90,

$$M_u = 0.90 \cdot A_s \cdot 60 \cdot \left[d - \frac{A_s \cdot 60}{1.7 \cdot 4 \cdot 12}\right] \cdot \frac{1}{12}$$

which can be rearranged to:

$$3.309 \cdot A_s^2 - 4.5 \cdot d \cdot A_s + M_u = 0$$

The required area of steel can be found by solving for the smaller root in the quadratic equation.

$$A_s = \frac{4.5 \cdot d - \sqrt{20.25 \cdot d^2 - 13.236 \cdot M_u}}{6.618}$$

Then required area of steel is:

$$A_s = \frac{4.5 \cdot 38.50 - \sqrt{20.25 \cdot 38.50^2 - 13.236 \cdot 68.6}}{6.618} = 0.40\,\text{in}^2/\text{ft}$$

Try #6 bars at 12 inches (A_s = 0.44 in^2/ft).

[5.5.4.2.1] Check that assumed ϕ = 0.90 is correct.

For #6 bars, $d = 42 - 3 - \frac{0.75}{2} = 38.63$ in

$$c = \frac{A_s \cdot f_y}{0.85 \cdot f'_c \cdot \beta_1 \cdot b} = \frac{0.44 \cdot 60}{0.85 \cdot 4 \cdot 0.85 \cdot 12} = 0.76 \text{ in}$$

[5.7.2.1] Concrete compression strain limit $\varepsilon_c = 0.003$

[Table C5.7.2.1-1] Reinforcement tension-controlled strain limit $\varepsilon_{tl} = 0.005$

$$\varepsilon_t = (d - c)\left(\frac{\varepsilon_c}{c}\right) = (38.63 - 0.76)\left(\frac{0.003}{0.76}\right) = 0.149 > \varepsilon_{tl} = 0.005$$

Therefore, ϕ = 0.90 <u>OK</u>

Try #6 bars at 12 inch spacing (A_s=0.44 in^2/ft).

[5.7.3.3.2] **Check Minimum Reinforcement**

The minimum reinforcement check is the amount of flexural reinforcement needed to carry the lesser of the cracking moment or 1.33 times the original design moment.

The concrete density modification factor, λ, for normal weight concrete is 1.0.

The rupture stress of concrete in flexure is:

[5.4.2.6] $f_r = 0.24 \cdot \lambda \cdot \sqrt{f'_c} = 0.24 \cdot 1.0 \cdot \sqrt{4} = 0.48$ ksi

The section modulus is:

$$S = \frac{1}{6} \cdot b \cdot t^2 = \frac{1}{6} \cdot 12 \cdot (42)^2 = 3528 \text{ in}^3$$

Take γ_1 = 1.60 and γ_3 = 0.67 for ASTM A615 Grade 60 reinforcement.

Combining these parameters leads to a cracking moment of:

$$M_{cr} = \gamma_3 \cdot \gamma_1 \cdot f_r \cdot S = 0.67 \cdot 1.6 \cdot 0.48 \cdot 3528 \cdot \frac{1}{12} = 151.3 \text{ k-ft}$$

The other criterion is:

$1.33 \cdot M_u = 1.33 \cdot 68.6 = 91.2$ kip-ft <u>GOVERNS</u>

The capacity of the #6 bars at a 12 inch spacing is:

$$M_r = \phi \cdot A_s \cdot f_y \cdot \left(d - \frac{a}{2}\right)$$

$$M_r = 0.9 \cdot 0.44 \cdot 60 \cdot \left(38.63 - \frac{0.76 \cdot 0.85}{2}\right) \cdot \left(\frac{1}{12}\right) = 75.8 \text{ kip-ft} < 91.2 \text{ kip-ft}$$

Try #7 bars at 12 inch spacing (A_s = 0.60 in^2):

d = 38.56 in

a = 0.88 in c = 1.04 in

$\varepsilon_t = 0.108 > \varepsilon_{tl} = 0.005$ <u>OK</u>

M_r = 102.9 kip-ft > 91.2 kip-ft <u>OK</u>

Provide #7 bars at 12 inch spacing (A_s = 0.60 in^2)

2. Bottom Transverse Reinforcement

Design For Strength Limit State

Although the toe has a greater thickness than the heel, for simplicity assume a constant thickness of 42 inches. Then the factored moment for the bottom mat is the largest of the moments due to the maximum pile reactions for the Row I or Row III piles.

For the Row I piles:

$$M_{uRowI} = \left(\frac{\text{Pile Reaction}}{\text{Pile Spacing}}\right)(\text{Moment Arm})$$

$$= \left(\frac{199.7}{8.0}\right)(4.00 - 1.50) = 62.4 \text{ kip} - \text{ft/ft width}$$

For the Row III piles, subtract off the moment due to earth on the heel (see earlier calculation for M_{EV}) when calculating the factored moment. (Use minimum load factor for EV, γ = 1.0):

$$M_{uRowIII} = \left(\frac{\text{Pile Reaction}}{\text{Pile Spacing}}\right)(\text{Moment Arm}) - \gamma \cdot M_{EV}$$

$$= \left(\frac{178.0}{8.0}\right)(5.75 - 1.25) - 1.0\,(42.7) = 57.4 \text{ kip} - \text{ft/ft width}$$

The Row I moment governs. $M_{udes} = 62.4$ kip - ft/ft width
Assuming #8 bars, the depth of the bottom flexural reinforcement is:

$$d = (\text{thickness}) - (\text{pile embedment}) - \left(\frac{d_b}{2}\right) = 42 - 12 - \frac{1.00}{2} = 29.50 \text{ in}$$

Solve once again with:

$$A_s = \frac{4.5 \cdot d - \sqrt{20.25 \cdot d^2 - 13.236 \cdot M_u}}{6.618}$$

$$A_s = \frac{4.5 \cdot 29.50 - \sqrt{20.25 \cdot 29.50^2 - 13.236 \cdot 62.4}}{6.618} = 0.48 \text{ in}^2/\text{ft}$$

The required area of steel is 0.48 in^2/ft. Try #7 bars at 12 inches with standard hooks (A_s = 0.60 in^2/ft).

[5.5.4.2.1] Check that assumed ϕ = 0.90 is correct:

For #7 bars, $d = 42 - 12 - \frac{0.875}{2} = 29.56$ in

$$c = \frac{A_s \cdot f_y}{0.85 \cdot f'_c \cdot \beta_1 \cdot b} = \frac{0.60 \cdot 60}{0.85 \cdot 4 \cdot 0.85 \cdot 12} = 1.04 \text{ in}$$

[5.7.2.1] Concrete compression strain limit $\varepsilon_c = 0.003$

[Table C5.7.2.1-1] Reinforcement tension-controlled strain limit $\varepsilon_{tl} = 0.005$

$$\varepsilon_t = (d - c) \cdot \left(\frac{\varepsilon_c}{c}\right) = (29.56 - 1.04) \cdot \left(\frac{0.003}{1.04}\right) = 0.082 > \varepsilon_{tl} = 0.005$$

Therefore, ϕ = 0.90 <u>OK</u>

[5.7.3.3.2] **Check Minimum Reinforcement**

The minimum reinforcement check for the bottom of the footing has the same steps as the other elements.

Using the simplified constant thickness of 42 inches, previous calculations result in a value for M_{cr} of:

$$M_{cr} = 151.3 \text{ kip - ft}$$

The other criterion is:

$1.33 \cdot M_u = 1.33 \cdot 62.4 = 83.0$ kip-ft GOVERNS

The capacity of the #7 bars at a 12 inch spacing is:

$$M_r = \phi \cdot A_s \cdot f_y \cdot \left(d - \frac{a}{2}\right)$$

$$M_r = 0.9 \cdot 0.60 \cdot 60 \cdot \left(29.56 - \frac{1.04 \cdot 0.85}{2}\right) \cdot \left(\frac{1}{12}\right)$$

$$= 78.6 \text{ kip - ft} < 83.0 \text{ kip - ft}$$ NO GOOD

Revise reinforcement to #8 bars at 12 inches ($A_s = 0.79$ in^2/ft).

Then:

d = 29.50 in

a = 1.16 in c = 1.36 in

$\varepsilon_t = 0.062 > \varepsilon_{tl} = 0.005$ OK

$$M_r = 102.8 \text{ kip - ft} > 83.0 \text{ kip - ft}$$ OK

Provide #8 bars at 12 inch spacing ($A_s = 0.79$ in^2)

3. Longitudinal Reinforcement

Design For Strength Limit State

For longitudinal bars, design for uniform load due to all vertical loads spread equally over the length of the footing. Assume the footing acts as a continuous beam over pile supports. Use the longest pile spacing for design span.

Then based on the maximum vertical load from Table 11.4.1.5:

$$w_u = \frac{4273}{59.00} = 72.4 \text{ kips/ft}$$

$$M_u = \frac{w_u L^2}{10} = \frac{72.4 \cdot (8.0)^2}{10} = 463.4 \text{ kip - ft}$$

Assume #6 bars, which is the smallest size used by MnDOT in footings:

$$d = 42 - 12 - 1.00 - \frac{0.75}{2} = 28.63 \text{ in}$$

Assuming $\phi = 0.90$, solve for required area of reinforcement:

$$M_r = \phi \cdot M_n = \phi \cdot A_s \cdot f_y \cdot \left(d - \frac{A_s \cdot f_y}{2 \cdot 0.85 \cdot f'_c \cdot b}\right) \geq M_u$$

Then:

$$463.4 = 0.90 \cdot A_s \cdot 60 \cdot \left(28.63 - \frac{A_s \cdot 60}{2 \cdot 0.85 \cdot 4 \cdot 171}\right) \cdot \frac{1}{12}$$

Rearrange and get $0.2322 \cdot A_s^2 - 128.84 \cdot A_s + 463.4 = 0$

Solving, minimum A_s = 3.62 in^2

Try 11-#6 bars. (A_s = 4.84 in^2)

Check that assumed ϕ = 0.90 is correct:

$$c = \frac{A_s \cdot f_y}{0.85 \cdot f_c' \cdot \beta_1 \cdot b} = \frac{4.84 \cdot 60}{0.85 \cdot 4 \cdot 0.85 \cdot 171} = 0.59 \text{ in}$$

[5.7.2.1] Concrete compression strain limit $\varepsilon_c = 0.003$

[Table C5.7.2.1-1] Reinforcement tension-controlled strain limit $\varepsilon_{tl} = 0.005$

$$\varepsilon_t = (d - c) \cdot \left(\frac{\varepsilon_c}{c}\right) = (28.63 - 0.59) \cdot \left(\frac{0.003}{0.59}\right) = 0.143 > \varepsilon_{tl} = 0.005$$

Therefore ϕ = 0.90 <u>OK</u>

M_r = 618.1 kip-ft

Check Minimum Reinforcement

[5.4.2.6] The rupture stress of concrete in flexure was previously calculated as:

f_r = 0.48 ksi

The section modulus is:

$$S = \frac{1}{6} \cdot b \cdot t^2 = \frac{1}{6} \cdot 171 \cdot (42)^2 = 50{,}274 \text{ in}^3$$

Take γ_1 = 1.60 and γ_3 = 0.67 for ASTM A615 Grade 60 reinforcement.

Combining these parameters leads to a cracking moment of:

$$M_{cr} = \gamma_3 \cdot \gamma_1 \cdot f_r \cdot S = 0.67 \cdot 1.6 \cdot 0.48 \cdot 50{,}274 \cdot \frac{1}{12} = 2155.7 \text{ kip - ft}$$

The other criterion is:

$1.33 \cdot M_u = 1.33 \cdot 463.4 = 616.3$ kip-ft <u>GOVERNS</u>

M_r = 618.1 kip-ft > 616.3 kip-ft <u>OK</u>

Provide 11-#6 bars (A_s = 4.84 in^2), top and bottom, for the footing longitudinal reinforcement.

J. Flexural Design of the Stem

The moments associated with the eccentricity of vertical loads are minimal and are therefore ignored. Use a one-foot wide design strip.

The stem design is governed by the horizontal earth pressure and live load surcharge loading during construction.

[3.11.5.5]

Horizontal Earth Pressure

$p_{top} = 0.0 \text{ ksf}$

$p_{bottom} = 0.033 \cdot 21.50 = 0.710 \text{ ksf}$

The resultant force applied to the stem is:

$P_{EH} = 0.5 \cdot (0.710) \cdot (21.50) \cdot (1.00) = 7.63 \text{ kips}$

The height of the resultant above the footing is:

$x_{EH} = \frac{21.50}{3} = 7.17 \text{ ft}$

The moment at the base of the stem is:

$M_{EH} = P_{EH} \cdot x_{EH} = 7.63 \cdot 7.17 = 54.7 \text{ kip-ft}$

[Table 3.11.6.4-1]

Live Load Surcharge

For walls over 20 feet in height, h_{eq} is 2 feet.

The resultant force applied to the stem is:

$P_{LS} = 0.033 \cdot (2.00) \cdot (21.50) \cdot (1.00) = 1.42 \text{ kips}$

The height of the resultant force above the footing is:

$x_{LS} = \frac{21.50}{2} = 10.75 \text{ ft}$

The moment at the base of the stem is:

$M_{LS} = P_{LS} \cdot X_{LS} = 1.42 \cdot 10.75 = 15.3 \text{ kip - ft}$

Design Moments

The design factored moment is:

$M_u = 1.5 \cdot M_{EH} + 1.75 \cdot M_{LS} = 1.50 \cdot 54.7 + 1.75 \cdot 15.3 = 108.8 \text{ kip-ft}$

The design service moment is:

$M_{service} = 1.0 \cdot M_{EH} + 1.0 \cdot M_{LS} = 1.0 \cdot 54.7 + 1.0 \cdot 15.3 = 70.0 \text{ kip-ft}$

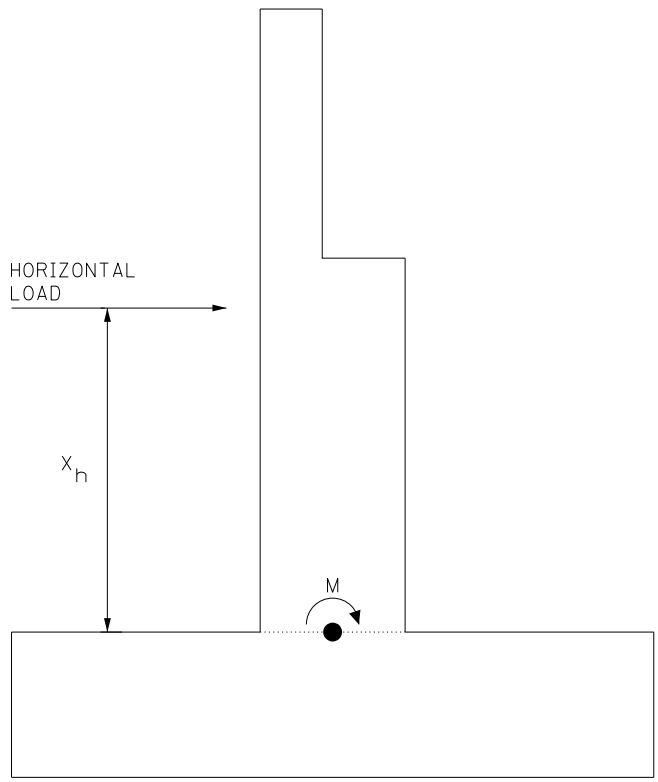

Figure 11.4.1.6
Load Diagram for Stem Design

[5.7.2.2]
[5.7.3.2]

Investigate the Strength Limit State

Determine the area of back-face flexural reinforcement necessary to satisfy the design moment.

M_U = 108.8 kip - ft

Initially, assume that #6 bars are used for flexural reinforcement to compute the "d" dimension:

$$d = (\text{thickness}) - (\text{cover}) - \left(\frac{d_b}{2}\right) = 54 - 2 - \frac{0.75}{2} = 51.63 \text{ in}$$

For f'_c = 4.0 ksi and assuming ϕ = 0.90, it was shown earlier that:

$$A_s = \frac{4.5 \cdot d - \sqrt{20.25 \cdot d^2 - 13.236 \cdot M_u}}{6.618}$$

Then required area of steel is 0.47 in^2/ft.

Try #7 bars at 12 inches (A_s=0.60 in^2/ft)

d = 51.56 in

a = 0.88 in

M_r = 138.0 kip-ft

Check that assumed ϕ = 0.90 is correct.

$c = a/\beta_1 = 0.88/0.85 = 1.04$ in

[5.7.2.1] Concrete compression strain limit $\varepsilon_c = 0.003$

[Table C5.7.2.1-1] Reinforcement tension-controlled strain limit $\varepsilon_{tl} = 0.005$

$$\varepsilon_t = (d - c)\left(\frac{\varepsilon_c}{c}\right) = (51.56 - 1.04)\left(\frac{0.003}{1.04}\right) = 0.146 > \varepsilon_{tl} = 0.005$$

Therefore ϕ = 0.90 <u>OK</u>

[5.7.3.4] **Crack Control**

Check crack control equations to ensure that the primary reinforcement is well distributed.

Compute the modular ratio for 4.0 ksi concrete:

$$n = \frac{E_s}{E_c} = \frac{29{,}000}{33{,}000 \cdot (0.145)^{1.5} \cdot \sqrt{4}} = 7.96$$ <u>Use 8</u>

The transformed area of the reinforcement is:

$$n \cdot A_s = 8 \cdot 0.60 = 4.80 \text{ in}^2$$

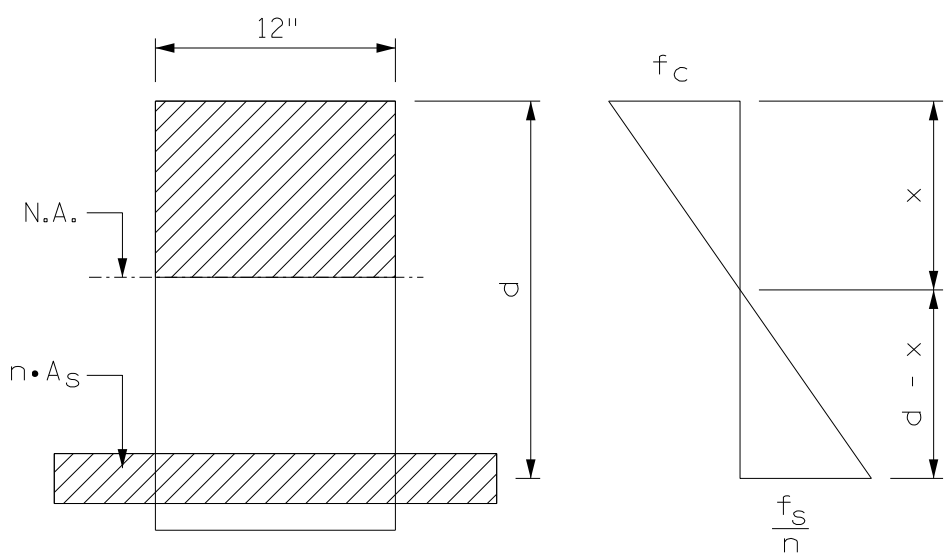

Figure 11.4.1.7

Determine the location of the neutral axis:

$$\frac{1}{2}\cdot bx^2 = n\cdot A_S(d - x)$$

$$\frac{1}{2}\cdot(12)\cdot x^2 = 4.80\ (51.56 - x) \qquad \text{solving, } x = 6.03 \text{ inches}$$

$$j\cdot d = d - \frac{x}{3} = 51.56 - \frac{6.03}{3} = 49.55 \text{ in}$$

$$\text{Actual } f_s = \frac{M_{service}}{A_s \cdot j \cdot d} = \frac{70.0\cdot 12}{0.60\cdot(49.55)} = 28.3 \text{ ksi}$$

Concrete cover = 2 in

$$d_c = \text{concrete cover} + \frac{d_b}{2} = 2 + \frac{0.875}{2} = 2.44 \text{ in}$$

For Class 1 exposure, $\gamma_e = 1.0$ and h = 54 in:

$$\beta_s = 1 + \frac{d_c}{0.7\,(h - d_c)} = 1 + \frac{2.44}{0.7\,(54 - 2.44)} = 1.068$$

$$\text{Allowable } f_s = \frac{700\ \gamma_e}{\beta_s \cdot (s + 2\cdot d_c)} = \frac{700\cdot 1.0}{1.068\cdot(12 + 2\cdot 2.44)}$$

= 38.8 ksi, but must be $\leq 0.6f_y$= 36.0 ksi

Allowable f_s =36.0 ksi > 28.3 ksi <u>OK</u>

[5.7.3.3.2] **Check Minimum Reinforcement**

The factored flexural resistance must be greater than the lesser of M_{cr} and $1.33 \cdot M_u$.

The section modulus is:

$$S = \frac{1}{6}\cdot b\cdot t^2 = \frac{1}{6}\cdot 12\cdot(54)^2 = 5832 \text{ in}^3$$

γ_1 = 1.60 (for other concrete structures)
γ_3 = 0.67 (for ASTM A615 Grade 60 reinforcement).

Combining these parameters and using the rupture stress computed earlier leads to a cracking moment of:

$$M_{cr} = \gamma_3\cdot\gamma_1\cdot f_r\cdot S = 0.67\cdot 1.6\cdot\frac{0.48\cdot 5832}{12} = 250.1 \text{ kip-ft}$$

The factored flexural resistance must be greater than the lesser of M_{cr} or $1.33M_u$.

$1.33 \cdot M_u = 1.33 \cdot 108.8 = 144.7$ kip - ft GOVERNS
Actual M_r = 138.0 k-ft < 144.7 kip-ft NO GOOD

Try #6 bars at 6 inch spacing (A_s=0.88 in^2/ft):
d = 51.63 in
a = 1.29 in c = 1.52 in
$\varepsilon_t = 0.099 > \varepsilon_{tl} = 0.005$ OK
M_r = 201.9 kip-ft

Provide #6 bars at 6 inches (A_s=0.88 in^2/ft) for vertical back face dowels.

Splice Length

[5.11.2.1.1]

Calculate the tension lap length for the stem vertical reinforcing. For epoxy coated #6 bars the basic development length ℓ_{db} is:

$$\ell_{db} = \frac{2.4 \cdot d_b \cdot f_y}{\sqrt{f'_c}} = \frac{2.4 \cdot 0.75 \cdot 60}{\sqrt{4.0}} = 54.0 \text{ in.}$$

The modification factors to the development length are:

λ_{cf} = 1.5 for epoxy coated bars with cover less than three bar diameters (2.25 in).
λ_{rl} = 1.0 for vertical bars
λ = 1.0 for normal weight concrete
λ_{er} = 1.0 taken conservatively assuming $A_{sprovided} = A_{srequired}$
For determination of λ_{rc}:
c_b = 2.38 in. (governed by 2.0 clear + 0.5 · bar diameter)
A_{tr} = 0 since there are no bars that cross the potential splitting planes
Then k_{tr} = 0

$$\lambda_{rc} = \frac{d_b}{c_b + k_{tr}} = \frac{0.75}{2.38 + 0} = 0.32 < 0.4$$

So λ_{rc} = 0.4

Then the development length ℓ_d is:

$$\ell_d = \frac{\ell_{db} \cdot (\lambda_{rl} \cdot \lambda_{cf} \cdot \lambda_{rc} \cdot \lambda_{er})}{\lambda} = \frac{54.0 \cdot (1.0 \cdot 1.5 \cdot 0.4 \cdot 1.0)}{1.0} = 32.40 \text{ in.}$$

[5.11.5.3.1]

Use a Class B splice.

The required lap length ℓ_{spl} is:

$$\ell_{spl} = 1.3 \cdot \ell_d = 1.3 \cdot 32.40 = 42.12 \text{ in}$$

Therefore, the tension lap length must be at least 3'-7".

To produce an efficient design, determine the transition point above the footing where the reinforcement can be changed to #6 bars at 12 inches.

The stem's factored flexural resistance utilizing #6 bars at 12 inches is:

$$M_r = \phi M_n = \phi A_s \cdot f_s \cdot \left(d - \frac{a}{2}\right)$$

$$a = \frac{A_s \cdot f_s}{0.85 \cdot f'_c \cdot b} = \frac{0.44 \cdot 60}{0.85 \cdot 4.0 \cdot 12} = 0.65 \text{ in}$$

$$M_r = 0.9 \cdot 0.44 \cdot 60 \cdot \left(51.63 - \frac{0.65}{2}\right) \cdot \frac{1}{12} = 101.6 \text{ kip} - \text{ft}$$

The $1.33M_u$ criteria will control, so the maximum factored moment at the transition point M_{utrans} can be determined as follows:

$$M_r = 1.33 \cdot M_{utrans}$$

$$M_{utrans} = \frac{M_r}{1.33} = \frac{101.6}{1.33} = 76.4 \text{ k - ft}$$

The depth that this factored moment occurs can be determined from the following:

$$M_{utrans} = 1.5\ M_{EHtrans} + 1.75\ M_{LStrans}$$

$$M_{utrans} = 1.5 \cdot \left(\frac{1}{2} \cdot 0.033 \cdot h_{trans}^2\right) \cdot \left(\frac{h_{trans}}{3}\right) + 1.75 \cdot \frac{1}{2} \cdot 0.033 \cdot 2.0 \cdot h_{trans}^2$$

$$M_{utrans} = 0.00825h_{trans}^3 + 0.05775h_{trans}^2$$

Solving for h_{trans}, the maximum wall height at which #6 bars at 12 inches is adequate is 18.9 feet, say 18'-10".

Then, the height above the footing that #6 bars at 6 inches is required is:

21.5 - 18.83 = 2.67 ft

The crack control requirements also need to be verified at this location.

The procedure above yields the following results:

Service moment at transition point, M_{strans} = 48.9 kip-ft
Neutral axis location, x = 5.22 in
jd = 49.89 in
Actual f_s = 26.7 ksi < Permitted f_s =36.0 ksi in OK

In summary, provide #6 bars at 6 inches for the back face dowels that extend 2'-8" plus a lap length (3'-7") beyond the top of the footing. In addition, provide #6 bars at 12 inches for the full height of the stem.

[5.10.8]

Shrinkage and Temperature Reinforcement

Reinforcement is required on the faces of the abutment stem to resist cracking due to shrinkage and temperature.

$$b = 15.75 \text{ ft} = 189 \text{ in}$$

$$h = 54 \text{ in}$$

$$A_s \geq \frac{1.30 \cdot b \cdot h}{2 \cdot (b + h) \cdot f_y} = \frac{1.30 \cdot 189 \cdot 54}{2 \cdot (189 + 54) \cdot 60} = 0.46 \text{ in}^2/\text{ft}$$

Use #6 bars at 10 inches (A_s=0.53 in^2/ft) on each face, for the horizontal reinforcement and #6 bars at 10 inches for the vertical front face reinforcement. The required shrinkage and temperature reinforcement is 4.5% greater than the #6 bars at 12 inches (A_s = 0.44 in^2/ft) previously determined for the back face verticals, so some adjustments are necessary. Revise the previously designed back face vertical bars to #6 bars at 10 inches and the previously designed back face dowels to #6 bars at 5 inches.

L. Flexural Design of the Backwall (Parapet)

The required vertical reinforcement in the backwall (parapet) is sized to carry the moment at the bottom of the backwall. The design is performed on a one-foot wide strip of wall. The backwall design is governed by the horizontal earth pressure and live load surcharge loading during construction.

Horizontal Earth Pressure

$$p_{top} = 0.0 \text{ ksf}$$

$$p_{bottom} = 0.033 \cdot 5.75 = 0.190 \text{ ksf}$$

The resultant force applied to the backwall is:

$$P_{EH} = 0.5 \cdot (0.190) \cdot (5.75) \cdot (1.00) = 0.55 \quad \text{kips}$$

The height of the resultant above the bottom of the backwall is:

$$x_{EH} = \frac{(5.75)}{3} = 1.92 \quad \text{ft}$$

The moment at the bottom of the backwall is:

$$M_{EH} = P_{EH} \cdot x_{EH} = 0.55 \cdot 1.92 = 1.06 \quad \text{kip - ft}$$

[Table 3.11.6.4-1]

Live Load Surcharge

Interpolate between the values provided in the table to arrive at the required equivalent height of surcharge to use for the design of the backwall.

$$h_{eq} = \left(\frac{5.75 - 5}{10.0 - 5}\right) \cdot (3 - 4) + 4 = 3.85 \quad \text{ft}$$

The resultant force applied to the backwall is:

$$P_{LS} = 0.033 \cdot (3.85) \cdot (5.75) \cdot (1.00) = 0.73 \quad \text{kips}$$

The height of the resultant force above the bottom of the backwall is:

$$x_{LS} = \frac{5.75}{2} = 2.88 \quad \text{ft}$$

Moment at the bottom of the backwall is:

$$M_{LS} = P_{LS} \cdot x_{LS} = 0.73 \cdot 2.88 = 2.10 \text{ kip - ft}$$

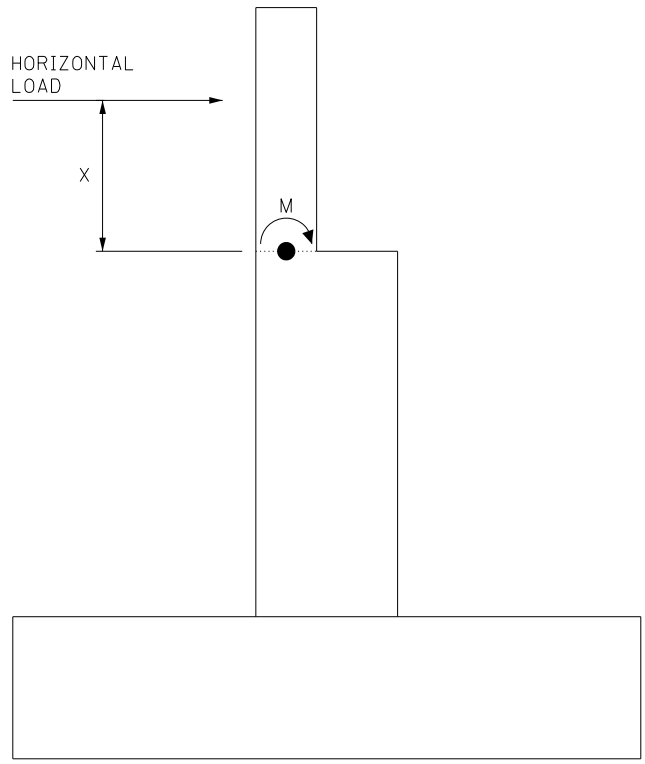

Figure 11.4.1.8
Load Diagram for Backwall Design

Design Moments

Combining the load factors for the EH and LS load components with the flexural design forces at the bottom of the backwall produces the following design forces.

$$M_U = 1.5M_{EH} + 1.75M_{LS} = 1.5(1.06) + 1.75(2.10) = 5.27 \text{ kip - ft}$$

$$M_{service} = M_{EH} + M_{LS} = 1.06 + 2.10 = 3.16 \text{ kip - ft}$$

[5.7.2.2]
[5.7.3.2]

Investigate the Strength Limit State

Determine the area of back-face flexural reinforcement necessary to satisfy the design moment.

Once again, for f'_c = 4 ksi and assuming ϕ = 0.90:

$$A_s = \frac{4.5 \cdot d - \sqrt{20.25 \cdot d^2 - 13.236 \cdot M_u}}{6.618}$$

Initially, assume that #6 bars are used for flexural reinforcement to compute the "d" dimension:

$$d = (\text{thickness}) - (\text{clear cover}) - \left(\frac{d_b}{2}\right) = 18 - 2 - \frac{0.75}{2} = 15.63 \text{ in}$$

Solving the equation, the required area of steel is 0.075 in^2/ft.

In order to match the spacing of the stem reinforcement, try #5 bars at a 10 inch spacing. (A_s = 0.37 in^2/ft, d = 15.69 in, M_r= 25.7 k-ft).

Check that assumed ϕ = 0.90 is correct.

$$c = \frac{A_s \cdot f_y}{0.85 \cdot f'_c \cdot \beta_1 \cdot b} = \frac{0.37 \cdot 60}{0.85 \cdot 4 \cdot 0.85 \cdot 12} = 0.64 \text{ in.}$$

[5.7.2.1] Concrete compression strain limit $\varepsilon_c = 0.003$

[Table C5.7.2.1-1] Reinforcement tension-controlled strain limit $\varepsilon_{tl} = 0.005$

$$\varepsilon_t = (d - c)\left(\frac{\varepsilon_c}{c}\right) = (15.69 - 0.64)\left(\frac{0.003}{0.64}\right) = 0.071 > \varepsilon_{tl} = 0.005$$

Therefore ϕ = 0.90 <u>OK</u>

[5.7.3.4] **Check Crack Control**

Check crack control equations to ensure that the primary reinforcement is well distributed.

The transformed area of the reinforcement is:

$$n \cdot A_s = 8 \cdot 0.37 = 2.96 \text{ in}^2$$

Determine the location of the neutral axis:

$$\frac{1}{2} \cdot bx^2 = n \cdot A_s (d - x)$$

$$\frac{1}{2} \cdot (12) \cdot x^2 = 2.96\ (15.69 - x) \qquad \text{solving, } x = 2.55 \text{ inches}$$

$$j \cdot d = d - \frac{x}{3} = 15.69 - \frac{2.55}{3} = 14.84 \text{ in}$$

$$\text{Actual } f_{ss} = \frac{M_{service}}{A_s \cdot j \cdot d} = \frac{3.16 \cdot 12}{0.37 \cdot (14.84)} = 6.9 \text{ ksi}$$

$$d_c = \text{concrete cover} + \frac{d_b}{2} = 2 + \frac{0.625}{2} = 2.31 \text{ in}$$

For Class 1 exposure (γ_e=1.0), and h= 18 in:

$$\beta_s = 1 + \frac{d_c}{0.7\ (h - d_c)} = 1 + \frac{2.31}{0.7\ (18 - 2.31)} = 1.21$$

$$\text{Then allowable } f_{ssa} = \frac{700\ \gamma_e}{\beta_s \cdot (s + 2 \cdot d_c)} < 0.6 \cdot f_y = 36 \text{ ksi}$$

$$= \frac{700 \cdot 1.0}{1.21 \cdot (12 + 2 \cdot 2.31)} = 34.8 \text{ ksi} > 6.9 \text{ ksi} \quad \underline{\text{OK}}$$

[5.7.3.3.2] **Check Minimum Reinforcement**

The section modulus is:

$$S = \frac{1}{6} \cdot b \cdot t^2 = \frac{1}{6} \cdot 12 \cdot (18)^2 = 648 \text{ in}^3$$

Taking γ_1 = 1.60 and γ_3 = 0.67 (for ASTM A615 Grade 60) and using the rupture stress computed earlier, the cracking moment is:

$$M_{cr} = \gamma_1 \gamma_3 \frac{f_r \cdot I_g}{y_t} = 0.67 \cdot 1.6 \cdot \frac{0.48 \cdot 648}{12} = 27.8 \text{ kip-ft}$$

The factored flexural resistance must be greater than the lesser of M_{cr} or $1.33M_u$:

$$1.33 \cdot M_u = 1.33 \cdot 5.27 = 7.0 \text{ kip - ft} \qquad \underline{\text{GOVERNS}}$$

$$\text{Actual } M_r = 25.7 \text{ kip - ft} > 7.0 \text{ kip - ft} \qquad \underline{\text{OK}}$$

Use #5 bars at 10 inches for vertical back face reinforcement.

[5.10.8] **Shrinkage and Temperature Reinforcement**

To distribute and limit the size of cracks associated with concrete shrinkage and with temperature changes, a modest amount of reinforcement is provided transverse to the primary reinforcement.

$$b = 5.75 \text{ ft} = 69 \text{ in}$$
$$h = 18 \text{ in}$$

$$A_s \geq \frac{1.30 \cdot b \cdot h}{2 \cdot (b + h) \cdot f_y} = \frac{1.30 \cdot 69 \cdot 18}{2 \cdot (69 + 18) \cdot 60} = 0.15 \text{ in}^2/\text{ft}$$

Provide horizontal #5 bars at 12 inches to both faces, A_s = 0.31 in^2/ft

The final reinforcing layout is presented in Figure 11.4.1.9.

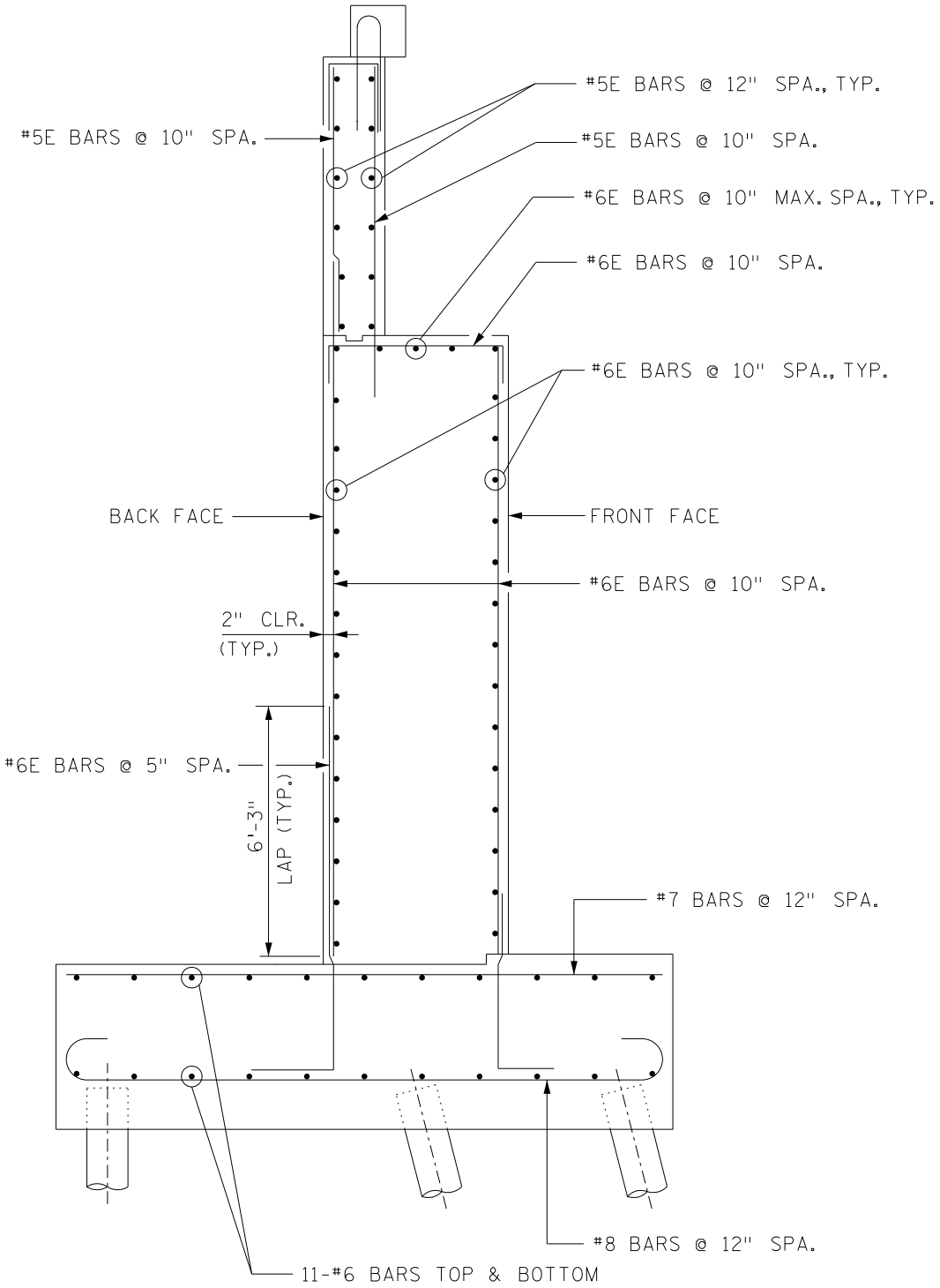

Figure 11.4.1.9

[This page intentionally left blank.
Wingwall design example to be added in the future.]

11.4.2 Retaining Wall Design Example

This example illustrates the design of a cantilever retaining wall supported on a spread footing, details of which can be found in the MnDOT Standard Plan Sheets 5-297.620 to 635. The wall has a stem height of 13'-0" and supports an "F" rail, a 2'-0" live load surcharge, and a back slope that can vary from level to 1V:6H. After determining the load components and design loads, the global behavior of the retaining wall is evaluated. This includes: an eccentricity (overturning) check, a bearing stress check, and a sliding check, after which the wall section is designed.

The wall cross-section is shown in Figure 11.4.2.1. As a starting point, choose a footing width that is 60 to 70 percent of the stem height, and a footing thickness that is 10 to 15 percent of the stem height. Choose a toe projection that is approximately 30 percent of the footing width.

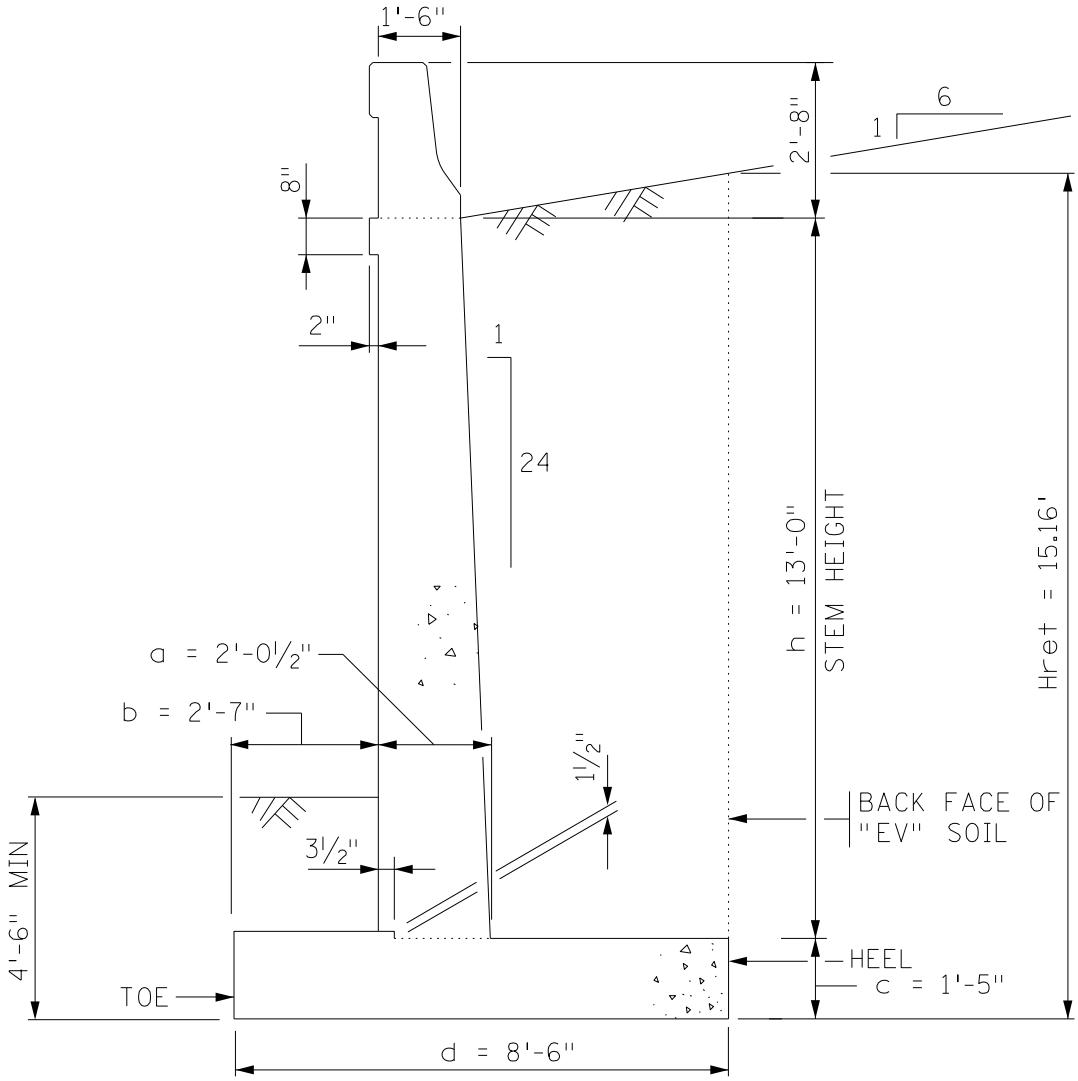

Figure 11.4.2.1

The current MnDOT LRFD Cast-In-Place Retaining Wall Standards (MnDOT CIP Wall Standards) were designed using the 2010 AASHTO LRFD code. This example is based on the current specifications and therefore, some of the requirements used will differ from the MnDOT CIP Wall Standards. For new designs that fall outside the limits of the MnDOT CIP Wall Standards, follow the current AASHTO requirements.

Material and design parameters used in this example are:

Soil:

The soil is noncohesive.
Unit weight of fill, γ_s= 0.120 kcf
Retained soil friction angle, ϕ_{fret} = 35°
Soil wall friction angle, $\delta = (2/3) \cdot \phi_{fret} = (2/3) \cdot 35° = 23.33°$
Backfill slope (1V:6H) angle, β = 9.46°

[C3.11.5.3]

Angle between back face of wall and horizontal, θ = 90°
(Note that for semi-gravity cantilevered walls with heels, a failure surface along the back face of the wall would be interfered with by the heel. So for this type of wall, the failure surface becomes a plane extending vertically up from the end of the heel and the back face of the "EV" soil is considered the back face of wall.)
Internal friction angle of foundation soil, ϕ_{ffound} = 32°

Concrete:

Strength at 28 days, f'_c = 4.0 ksi
Unit weight, w_c = 0.150 kcf

Reinforcement:

Yield strength, f_y = 60 ksi
Modulus of elasticity, E_s = 29,000 ksi

Barrier:

F-barrier weight = 0.464 k/ft
F-barrier centroid from outside barrier face = 0.53 ft

A. Bearing Capacity

This is a design example for a MnDOT standard wall, so the site specific conditions of where this retaining wall would be built are unknown. Therefore, the applied bearing pressures will be determined for this wall, but not checked against a maximum. The allowable bearing capacity for the specific wall location must be determined by a geotechnical engineer.

B. Loads

The design of the retaining wall is performed on a 1'-0" wide strip. Figure 11.4.2.2 shows a section of the retaining wall. Soil and concrete elements are broken into rectangles or triangles. Each rectangle or triangle is labeled with two numbers. The first number is the unfactored load and the second number (in parentheses) is the horizontal distance

"x" or vertical distance "y" from the toe of the footing to the center of load application. Calculations are shown below for earth loads, live load surcharge, and barrier collision load. All of the loads are summarized in Tables 11.4.2.1 and 11.4.2.2.

C. Earth Pressure (EH and EV) [3.11.5]

Use the Coulomb theory of earth pressure to determine the magnitude of active earth pressure.

$$K_a = \frac{\sin^2(\theta + \phi_{fret})}{\sin^2(\theta)\sin(\theta - \delta) \cdot \left[1 + \sqrt{\frac{\sin(\phi_{fret} + \delta) \cdot \sin(\phi_{fret} - \beta)}{\sin(\theta - \delta) \cdot \sin(\theta + \beta)}}\right]^2}$$

$$K_a = \frac{\sin^2(90 + 35)}{\sin^2(90)\sin(90 - 23.33) \cdot \left[1 + \sqrt{\frac{\sin(35 + 23.33) \cdot \sin(35 - 9.46)}{\sin(90 - 23.33) \cdot \sin(90 + 9.46)}}\right]^2}$$

K_a = 0.273

The retained fill height used in the calculation of the lateral earth pressure and the live load surcharge will be measured to the bottom of the footing regardless of the presence of a shear key.

The wall being designed here does not require a shear key, but the design of a shear key will be shown at the end of the example for informational purposes.

The retained fill height is the combination of the stem height, the additional height added by the 1V:6H back slope over the heel, and the thickness of the footing. The sloped soil starts at the top of the stem, so in our heel calculation, we will only subtract off the 1'-6" stem thickness at the top and not the additional thickness at the bottom due to batter.

$$H_{ret} = 13 + \frac{8.5 - 2.58 - 1.5}{6} + 1.42 = 15.16 \text{ ft}$$

The stress due to lateral earth pressure is:

$$p_{EH,top} = \gamma_s \cdot K_a \cdot H_{top} = 0.120 \cdot 0.273 \cdot 0 = 0 \text{ ksi}$$

$$p_{EH,bot} = \gamma_s \cdot K_a \cdot H_{ret} = 0.120 \cdot 0.273 \cdot 15.16 = 0.497 \text{ ksi}$$

The stress varies linearly from the top of the fill to the base of the footing, so the resulting force is:

$$P_{EH} = \frac{1}{2} \cdot p_{EH,bot} \cdot H_{ret} = \frac{1}{2} \cdot 0.497 \cdot 15.16 = 3.77 \text{ k}$$

This force acts on the wall at an angle δ from the horizontal based on Coulomb theory. It can be resolved into horizontal and vertical components.

$$P_{EHH} = P_{EH} \cdot \cos(\delta) = 3.77 \cdot \cos(23.33) = 3.46 \text{ k}$$
$$P_{EHV} = P_{EH} \cdot \sin(\delta) = 3.77 \cdot \sin(23.33) = 1.49 \text{ k}$$

The horizontal earth pressure resultant is applied at:

$$y_{EH} = \frac{H_{ret}}{3} = \frac{15.16}{3} = 5.05 \text{ ft above the bottom of footing}$$

See Figure 11.4.2.2 for application of the earth pressure load.

D. Live Load Surcharge (LS) [3.11.6.4]

The horizontal pressure p_{LS} due to live load surcharge is:

$$p_{LS} = \gamma_{eq} \cdot h_{eq}$$

$$\gamma_{eq} = \text{equivalent Coulomb fluid pressure}$$
$$\gamma_{eq} = K_a \cdot \gamma_s = 0.273 \cdot 0.120 = 0.033 \frac{\text{kip}}{\text{ft}^3}$$

From AASHTO LRFD Table 3.11.6.4-2, use h_{eq} = 2.0 ft based on a distance from wall backface to edge of traffic $\geq$ 1 ft.

$$p_{LS} = 0.033 \cdot 2 = 0.066 \text{ ksf}$$

Horizontal Component of LS:

$$P_{LSH} = 0.066 \cdot 15.16 \cdot \cos(23.33) = 0.92 \text{ kips}$$

The live load surcharge resultant is applied horizontally at:

$$y_{LS} = \frac{H_{ret}}{2} = \frac{15.16}{2} = 7.58 \text{ ft}$$

Vertical Component of LS applied at back face of EV soil mass:

$$P_{LSV1} = 0.066 \cdot 15.16 \cdot \sin(23.33) = 0.40 \text{ kips}$$

The live load surcharge resultant is applied vertically at the edge of the footing, x_{PLSV1} = 8.5 ft

Vertical component of LS applied to soil mass above heel:

$$p_{LSV2} = 0.120 \cdot 2 \cdot 1 = 0.240 \text{ k/ft}$$

$$P_{LSV2} = 2 \cdot 0.120 \cdot (8.50 - 2.58 - 1.50) = 1.06 \text{ kips}$$

$$x_{PLSV2} = 8.50 - \frac{(8.50 - 2.58 - 1.50)}{2} = 6.29 \text{ ft}$$

See Figure 11.4.2.2 for application of the live load surcharge.

E. Barrier Collision Load (CT) [A13.2]

Per LRFD Article 13.6.2, the barrier collision load is already factored (γ_{CT}=1.0) and is to be applied only at the Extreme Event II limit state. It will be considered when checking overturning, bearing, sliding, and in design of the footing. A discussion on application of the barrier collision load to the stem design is given in Article 11.4.2O. Application of the collision load to the F-barrier reinforcement is shown in Article 13.3.1 of this manual.

For the overturning check, bearing check, sliding check, and footing design, the horizontal vehicle collision force is assumed to be distributed uniformly over the length of one 30.5 foot long panel. The barrier is assumed to be a TL-4 barrier that meets the requirements of NCHRP 350. This requires a design load of 54 kips.

At the bottom of footing:

$$P_{CT} = \frac{54}{30.5} = 1.77 \frac{\text{kip}}{\text{ft}} \text{ of width}$$

P_{CT} is applied at a height y_{CT} above the footing:

$$y_{CT} = 2.67 + 13.0 + 1.42 = 17.09 \text{ ft}$$

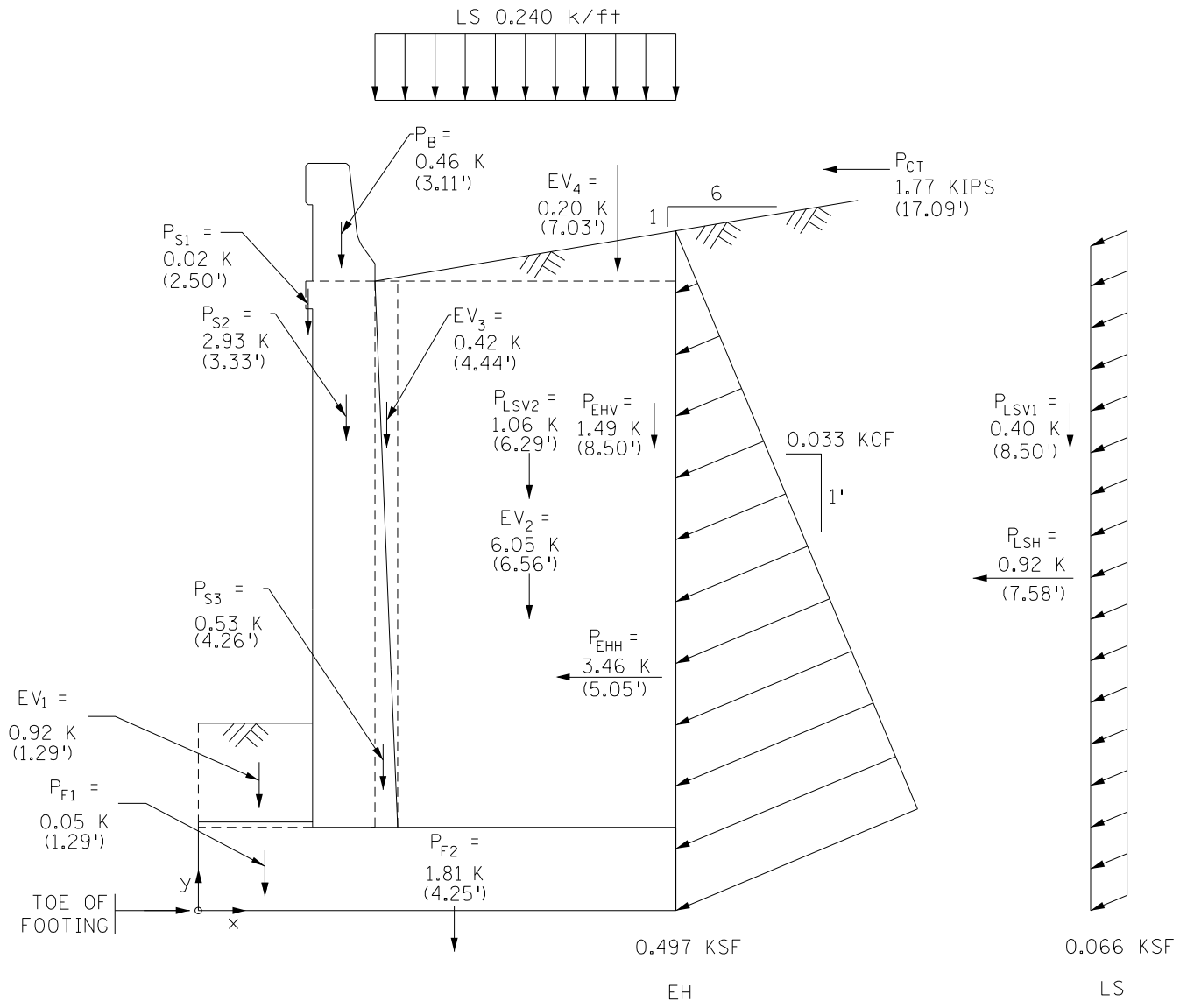

Figure 11.4.2.2

Table 11.4.2.1 Unfactored Vertical Loads and Moments About Toe of Footing

Type	Label	Load	Width (ft)	Thickness or height (ft)	Unit Weight (lb/ft^3)	Load (k/ft)	Lever arm to toe (ft)	Moment (k-ft/ft)
DC	P_B	Type F Rail	Predetermined linear weight			0.46	3.11	1.43
	P_{S1}	Stem coping	0.17	0.67	0.150	0.02	2.50	0.05
	P_{S2}*	Stem rectangular part	1.50	13.00	0.150	2.93	3.33	9.76
	P_{S3}	Stem tapered part	0.54	13.00	0.150	0.53	4.26	2.26
	P_{F2}	Footing	8.50	1.42	0.150	1.81	4.25	7.69
	P_{F1}*	Extra thickness on toe	2.58	0.13	0.150	0.05	1.29	0.06
EV	EV_1	Soil on toe	2.58	2.96	0.120	0.92	1.29	1.19
	EV_2	Soil on heel rectangular	3.88	13.00	0.120	6.05	6.56	39.69
	EV_3	Additional soil due to taper	0.54	13.00	0.120	0.42	4.44	1.86
	EV_4	Extra soil (sloped backfill)	4.42	0.74	0.120	0.20	7.03	1.41
EH	P_{EHV}	Vertical active earth pressure	See hand calculations			1.49	8.50	12.67
LS	P_{LSV2}	2ft LL surcharge over heel	4.42	2.00	0.120	1.06	6.29	6.67
	P_{LSV1}	LL surcharge vertical component	See hand calculations			0.40	8.50	3.40

*Footing step included in P_{F1} for ease of calculations

Table 11.4.2.2 Unfactored Horizontal Loads and Moments About Bottom of Footing

Type	Label	Load	Width (ft)	Thickness or height (ft)	Unit Weight (lb/ft^3)	Load Result (k/ft)	Lever arm to bottom of footing (ft)	Moment (k-ft/ft)
EH	P_{EHH}	Horizontal active earth pressure	See hand calculations			3.46	5.05	17.47
LS	P_{LSH}	Horizontal load due to LL surcharge	See hand calculations			0.92	7.58	6.97
CT	P_{CT}	Barrier (vehicle collision)	See hand calculations			1.77	17.09	30.25

F. Select Load Modifiers [1.3.3-1.3.5]

For typical retaining walls use:

$$\eta_D = 1,\ \eta_R = 1,\ \eta_I = 1$$

G. Select Applicable Load Combinations and Factors [3.4.1]

Table 11.4.2.3 summarizes the load combinations used for design of the wall. Strength Ia and Extreme Event IIa, used to check sliding and overturning, have minimum load factors for the vertical loads and maximum load factors for the horizontal loads. Strength Ib and Extreme Event IIb are used to check bearing and have maximum load factors for both vertical and horizontal loads. Note that live load surcharge (LS) and horizontal earth (EH) are not included in Extreme Event IIa or IIb. The vehicle collision load (CT) is an instantaneous load applied in the same direction as LS and EH. Because of its instantaneous nature, it has the effect of unloading LS and EH. Therefore, the three loads are not additive and only CT is included in the Extreme Event load combinations.

The service limit state is used for the crack control check.

Table 11.4.2.3 - Load Combinations Considered for Example

Load Comb.	γ_{DC}	γ_{EV}	γ_{LS}	γ_{EH}	γ_{CT}	Application
Strength Ia	0.90	1.00	1.75	1.50	-	Sliding, Overturning
Strength Ib	1.25	1.35	1.75	1.50	-	Bearing, Stem Strength
Extreme IIa	0.90	1.00	-	-	1.00	Sliding, Overturning
Extreme IIb	1.25	1.35	-	-	1.00	Bearing
Service I	1.00	1.00	1.00	1.00	-	Stem Crack Control

H. Factor Loads and Moments For Footing Design

The unfactored loads and moments from Tables 11.4.2.1 and 11.4.2.2 were taken in combination with the load factors in Table 11.4.2.3 to get the factored vertical and horizontal loads to check global stability. An example calculation for the Strength Ia load combination is shown below. Results for other load combinations are shown in Table 11.4.2.4.

As reflected in AASHTO LRFD Figure C11.5.6-3(a), note that the live load surcharge over the heel, P_{LSV2}, is not used in the Strength Ia or Extreme Event IIa load cases as it would increase the vertical load rather than minimize it. The vertical component P_{LSV1} and horizontal component P_{LSH} are always used together.

Also note that the vertical component of the lateral earth pressure, P_{EHV}, is considered an EH load per AASHTO LRFD Figure C11.5.6-1.

Strength Ia:

$$P_u = \gamma_{DCIa} \cdot P_{DC} + \gamma_{EVIa} \cdot P_{EV} + \gamma_{EHIa} \cdot P_{EHV} + \gamma_{LSIa} \cdot P_{LSV}$$

$$\begin{aligned} &= 0.9 \cdot (0.46 + 0.02 + 2.93 + 0.53 + 1.81 + 0.05) \\ &+ 1.0 \cdot (0.92 + 6.05 + 0.42 + 0.20) \\ &+ 1.5 \cdot 1.49 \\ &+ 1.75 \cdot 0.40 \end{aligned}$$

P_u = 15.75 kips

$$\begin{aligned} M_{Pu} &= 0.9 \cdot (1.43 + 0.05 + 9.76 + 2.26 + 7.69 + 0.06) \\ &+ 1.0 \cdot (39.69 + 1.86 + 1.41 + 1.19) \\ &+ 1.5 \cdot 12.67 \\ &+ 1.75 \cdot 3.40 \end{aligned}$$

M_{Pu} = 88.23 kip-ft

$$H_u = \gamma_{EHIa} \cdot P_{EHH} + \gamma_{LSIa} \cdot P_{LSH}$$

$$H_u = 1.5 \cdot 3.46 + 1.75 \cdot 0.92 = 6.80 \text{ kips}$$

$$M_{H_u} = 1.5 \cdot 17.47 + 1.75 \cdot 6.97 = 38.40 \text{ kip} - \text{ft}$$

Table 11.4.2.4 - Factored Loads and Moments

Load Combination	Vertical load P_U (kips)	Vertical moment M_{Pu} (k-ft)	Horizontal load H_u (kip)	Horizontal moment M_{Hu} (kip-ft)
Strength Ia	15.75	88.23	6.80	38.40
Strength Ib	22.29	122.79	6.80	38.40
Extreme IIa	12.81	63.28	1.77	30.25
Extreme IIb	17.50	86.17	1.77	30.25
Service	16.34	88.14	4.38	24.44

I. Check Overturning (Eccentricity) [11.6.3.3]

The width of footing dimension is designated as "d" in the Bridge Standard Plans for retaining walls. The LRFD Specifications designate the width of the footing as "B". For this example, the foundation rests on soil.

The current MnDOT CIP Wall Standards were designed using the 2010 AASHTO LRFD code, for which the maximum eccentricity for foundations on soil is B/4. In the 2012 AASHTO LRFD Bridge Design Specifications, the maximum eccentricity for foundations on soil was changed to B/3. This example is based on the current specifications and therefore, the limit of B/3 will be used. For new designs that fall outside the limits of the MnDOT standards, follow the current AASHTO requirements.

[10.6.3.3]

$$e_{max} = \frac{B}{3} = \frac{d}{3} = \frac{8.50}{3} = 2.83 \text{ ft}$$

Using the following relationships, compare the actual eccentricity e to e_{max}:

$$x_r = \frac{M_{Pu} - M_{Hu}}{P_u} \qquad \text{Actual } e = \frac{d}{2} - x_r$$

Where x_r = location of resultant from the toe

For Strength Ia:

$$x_r = \frac{88.23 - 38.40}{15.75} = 3.16 \text{ ft}$$

$$\text{Actual } e = \frac{8.50}{2} - 3.16 = 1.09 \text{ ft} < 2.83 \text{ ft}$$ <u>OK</u>

Results of the check are summarized in Table 11.4.2.5.

Table 11.4.2.5 Eccentricity Check

Load Combination	Vertical load P_U (kips)	Vertical moment M_{Pu} (k-ft)	Horizontal moment M_{Hu}(kip-ft)	x_r (ft)	Actual e (ft)	e_{max} (ft)
Strength Ia	15.75	88.23	38.40	3.16	1.09	2.83
Extreme IIa	12.81	63.28	30.25	2.58	1.67	2.83

The footing size is satisfactory for overturning.

J. Check Bearing [11.6.3.2]

Determine the bearing pressure σ_v at the strength limit state for a foundation on soil.

For Strength Ib:

$$x_r = \frac{M_{Pu} - M_{Hu}}{P_u} = \frac{122.79 - 38.40}{22.29} = 3.79 \text{ ft}$$

$$e = \frac{d}{2} - x_r = \frac{8.50}{2} - 3.79 = 0.46 \text{ ft}$$

$$\text{Effective width } B_{eff} = d - 2e = 8.50 - 2(0.46) = 7.58 \text{ ft}$$

$$\sigma_v = \frac{P_u}{B_{eff}} = \frac{22.29}{7.58} \cdot \left(\frac{1}{2}\right) = 1.47 \text{ tsf}$$

This must be less than the factored bearing resistance provided by the foundations engineer.

Results for the applicable load combinations are shown in Table 11.4.2.6.

Table 11.4.2.6 Bearing Check

Load Combination	Vertical load P_u (kips)	Vertical moment M_{PU} (k-ft)	Horizontal moment M_{Hu} (kip-ft)	x_r (ft)	e (ft)	B_{eff} (ft)	σ_v (tsf)
Strength Ib	22.29	122.79	38.40	3.79	0.46	7.58	1.47
Extreme IIb	17.50	86.17	30.25	3.20	1.05	6.40	1.37
Service	16.34	88.14	24.44	3.90	0.35	7.80	1.05

K. Check Sliding [10.6.3.4] [Table 3.11.5.3-1]

The factored horizontal force is checked against the friction resistance between the footing and the soil. If adequate resistance is not provided by the footing, a shear key must be added.

$$R_R = \phi R_n = \phi_\tau R_\tau + \phi_{ep} R_{ep}$$

From LRFD Table 10.5.5.2.2-1, $\phi_\tau = 0.80$

$R_\tau = P_u \tan(\delta)$ (for cohesionless soils)

[10.6.3.4] with $\tan(\delta) = \tan(\phi_{ffound})$ (for CIP footing)

For Strength Ia:

$R_\tau = 15.75 (\tan 32) = 9.84$ kips

$R_{ep} = 0.0$ (No shear key)

$R_R = 0.80 (9.84) + (0.0) = 7.87$ kips > 6.80 kips <u>OK</u>

Results for the sliding check are summarized in Table 11.4.2.7

Table 11.4.2.7 Sliding Check

Load Combination	Vertical load P_u (kips)	Horizontal load H_u (kips)	$\phi_\tau R_\tau$ (kips)	Check
Strength Ia	15.75	6.80	7.87	OK
Extreme IIa	12.81	1.77	6.40	OK

The footing size is satisfactory for sliding. The design of a shear key will be shown here for informative purposes.

Similar to the Bridge Standard Plans, use a 1'-0" by 1'-0" shear key placed such that the back wall reinforcement will extend into the shear key. Consider only the passive resistance of soil in front of the shear key. Ignore the passive resistance of soil in front of the wall and toe. Refer to Figure 11.4.2.3.

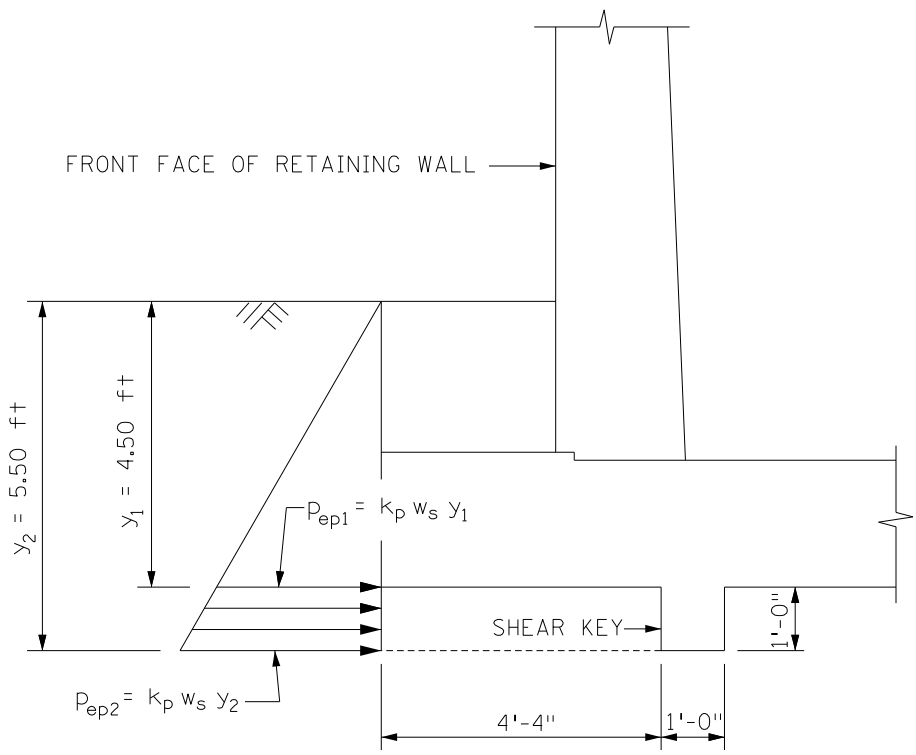

Figure 11.4.2.3

As stated earlier, internal friction angle of foundation soil, ϕ_{ffound} = 32°

Assume a friction angle between the concrete and soil, δ as:

$$\delta = \frac{2}{3} \cdot \phi_{ffound} = \frac{2}{3} \cdot (32) = 21.33\,^{\circ}$$

Toe soil slope β = 0°
Angle between face of footing and horizontal θ = 90°

$$K_p = \frac{\sin^2(\theta - \phi_{ffound})}{\sin^2(\theta) \cdot \sin(\theta + \delta) \cdot \left[1 - \sqrt{\frac{\sin(\phi_{ffound} + \delta) \cdot \sin(\phi_{ffound} + \beta)}{\sin(\theta + \delta) \cdot \sin(\theta + \beta)}}\right]^2}$$

$$K_p = \frac{\sin^2(90 - 32)}{\sin^2(90) \cdot \sin(90 + 21.33) \cdot \left[1 - \sqrt{\frac{\sin(32 + 21.33) \cdot \sin(32)}{\sin(90 + 21.33) \cdot \sin(90)}}\right]^2}$$

K_p = 7.33

Then:

$$p_{ep1} = K_p \cdot \gamma_s \cdot y_1 = 7.33 \cdot 0.120 \cdot 4.50 = 3.96 \text{ ksf}$$

$$p_{ep2} = K_p \cdot \gamma_s \cdot y_2 = 7.33 \cdot 0.120 \cdot 5.50 = 4.84 \text{ ksf}$$

$$R_{ep} = \left(\frac{p_{ep1} + p_{ep2}}{2}\right) \cdot (y_2 - y_1) = \left(\frac{3.96 + 4.84}{2}\right) \cdot (5.50 - 4.50) = 4.40 \text{ kips}$$

[Table 10.5.5.2.2-1] For the area in front of the shear key, the friction surface is soil on soil, located at the elevation of the bottom of shear key. For this area, use:

$$\phi_{\tau_sos} = 0.90 \text{ for soil on soil area in front of shear key}$$

The remaining portion of the friction surface is CIP concrete on sand, located at the bottom of shear key and bottom of footing. For this area, use:

$$\phi_{\tau_cos} = 0.80 \text{ for CIP concrete on sand}$$

For passive resistance from the soil in front of the shear key and below the footing, use:

$$\phi_{ep} = 0.50 \text{ for passive resistance}$$

Determine the weighted average resistance factor, ϕ_{τ_avg}, based on footing length.

The shear key is placed to allow the stem back face bars to extend into the key. Then the distance from the front of the toe to the front of the shear key is:

$$x_{sk} = \text{toe length} + \text{stem base} - 3.5"$$

$$x_{sk} = 2.58 + 2.04 - \frac{3.5}{12} = 4.33 \text{ ft}$$

$$\phi_{\tau_avg} = 0.90 \cdot \left(\frac{4.33}{8.50}\right) + 0.80 \cdot \left(\frac{8.50 - 4.33}{8.50}\right) = 0.85$$

$$R_\tau = 9.84 \text{ kips (calculated previously)}$$

For Strength Ia with shear key added:

$$R_R = \phi_{\tau_avg} \cdot R_\tau + \phi_{ep} \cdot R_{ep}$$

$$= 0.85 \cdot 9.84 + 0.50 \cdot 4.40 = 10.56 \text{ kips}$$

L. Design Footing for Shear [5.13.3.6]

Design footings to have adequate shear capacity without transverse reinforcement.

Determine d_v

As a starting point, assume #6 bars @ 12" (A_s = 0.44 in^2/ft) for the top transverse bars in the heel and #5 bars @ 12" (A_s = 0.31 in^2/ft) for the bottom transverse bars in the toe. Cover is 3 inches for the top reinforcement and 5 inches for the bottom reinforcement.

Then for the heel:

$$d_{sheel} = 17 - 3 - \frac{0.75}{2} = 13.63 \text{ in}$$

$$a_{heel} = \frac{A_s \cdot f_y}{0.85 \cdot f_c' \cdot b} = \frac{0.44 \cdot 60}{0.85 \cdot 4 \cdot 12} = 0.65 \text{ in}$$

[5.8.2.9]

$$d_{vheel} = d_{sheel} - \frac{a}{2} = 13.63 - \frac{0.65}{2} = 13.31 \text{ in}$$ <u>GOVERNS</u>

or $d_{vheel} = 0.9 \cdot d_e = 0.9 \cdot d_{sheel} = 0.90 \cdot 13.63 = 12.27$ in

or $d_{vheel} = 0.72 \cdot h = 0.72 \cdot 17.00 = 12.24$ in

For the toe:

$$d_{stoe} = 18.5 - 5 - \frac{0.625}{2} = 13.19 \text{ in}$$

$$a_{toe} = \frac{0.31 \cdot 60}{0.85 \cdot 4 \cdot 12} = 0.46 \text{ in}$$

$$d_{vtoe} = 13.19 - \frac{0.46}{2} = 12.96 \text{ in}$$

or $d_{vtoe} = 0.9 \cdot 13.19 = 11.87$ in

or $d_{vtoe} = 0.72 \cdot 18.50 = 13.32$ in <u>GOVERNS</u>

Check Heel for Shear

The vertical loads acting on the heel will be calculated in the same manner as the total vertical load was calculated. The vertical loads acting on the heel will be EV_2, a revised EV_4 (See Figure 11.4.2.4) that consists of sloped backfill outside of stem/heel juncture only, P_{LSV2}, P_{EHV}, and a revised P_{F2} which we will call P_{F2H}, the self-weight of the heel portion of the footing. The loads and moments are summarized in Table 11.4.2.8.

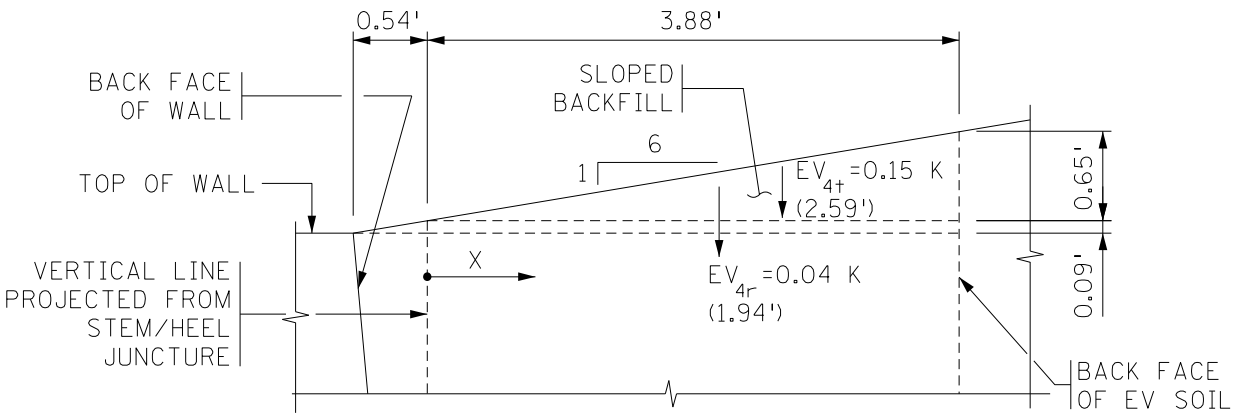

Figure 11.4.2.4

Table 11.4.2.8 Unfactored Vertical Load Components and Moments Acting on Heel

Type	Label	Load	Width (ft)	Thickness or height (ft)	Unit Weight (k/ft^3)	Load P (k/ft)	Lever arm to stem/heel junction (ft)	Moment (k-ft)
DC	P_{F2H}	Footing heel	3.88	1.42	0.150	0.83	1.94	1.61
EV	EV_2	Soil on heel rectangular	3.88	13.00	0.120	6.05	1.94	11.74
	EV_{4r}	Sloped backfill rectangle	3.88	0.09	0.120	0.04	1.94	0.08
	EV_{4t}	Sloped backfill triangle	3.88	0.65	0.120	0.15	2.59	0.39
EH	P_{EHV}	Vertical active earth pressure	See hand calculations			1.49	3.88	5.78
LS	P_{LSV2}	2ft LL surcharge	3.88	2.00	0.120	0.93	1.94	1.80
	P_{LSV1}	LL surcharge vertical component	See hand calculations			0.40	3.88	1.55

These loads need to be factored and then the upward vertical force from the trapezoidal bearing pressure acting on the heel can be calculated. The largest net vertical force will be used to design the heel.

An example calculation is shown here for Strength Ia:

$$P_{uheel} = \gamma_{DC} \cdot P_{F2H} + \gamma_{EV} \cdot (EV_2 + EV_{4r} + EV_{4t}) + \gamma_{EH} \cdot P_{EHV} + \gamma_{LS} \cdot P_{LSV1}$$

$$= 0.90 \cdot 0.83 + 1.0 \cdot (6.05 + 0.04 + 0.15) + 1.5 \cdot 1.49 + 1.75 \cdot 0.40$$

$$= 9.92 \text{ kips}$$

We need to calculate the upward bearing pressure acting on the heel that can be subtracted off of the downward vertical loads to get a net vertical load.

[10.6.5] Although the wall will be supported on soil, the trapezoidal bearing stress distribution is used in the structural design of the footing. This will produce larger upward forces acting on the toe and smaller upward forces acting on the heel, both of which are conservative.

Calculate the maximum and minimum vertical pressure for the Strength Ia load case (See Figure 11.4.2.5). The following equation is used when the resultant is within the middle one-third of the base.

[11.6.3.2]

$$\sigma_V = \frac{\Sigma P}{B}\left(1 \pm 6 \cdot \frac{e}{B}\right)$$

ΣP = 15.75 kips (from Table 11.4.2.4)
e = 1.09 ft (from Table 11.4.2.5)
B = 8.5 ft (width of the footing)

$$\sigma_{pmax} = \frac{15.75}{8.5}\left(1 + 6 \cdot \frac{1.09}{8.5}\right) = 3.28\ \frac{kip}{ft^2}$$

$$\sigma_{pmin} = \frac{15.75}{8.5}\left(1 - 6 \cdot \frac{1.09}{8.5}\right) = 0.43\ \frac{kip}{ft^2}$$

Next, use linear interpolation to calculate the vertical pressure at the heel/back face of stem junction.

$$\sigma_{pheel} = 0.43 + (3.28 - 0.43) \cdot \frac{3.88}{8.5} = 1.73\ \ ksf$$

Since the upward pressure varies linearly over the heel between σ_{Pmin} and σ_{Pheel}, we can average these two pressures and use that value to calculate the upward vertical force on the heel.

$$P_{up-heel} = \frac{0.43 + 1.73}{2} \cdot 3.88 = 4.19\ \ kips$$

So the net vertical load acting on the heel is:

$$P_{unetH} = P_{uheel} - P_{up-heel} = 9.92 - 4.19 = 5.73\ \ kips$$

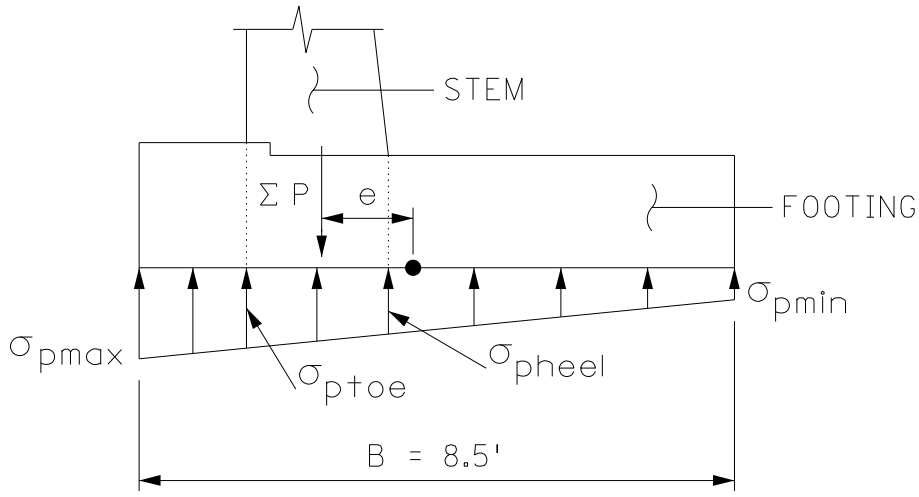

Trapezoidal Pressure for Footing Structural Design
Figure 11.4.2.5

Use the following for instances where the resultant is outside the middle one-third of the base, to account for when the bearing stress is triangular and the minimum heel pressure is zero.

[11.6.3.2]

$$\sigma_{vmax} = \frac{2 \cdot \sum P}{3 \cdot \left(\frac{B}{2} - e\right)}$$

$$\sigma_{vmin} = 0\,\text{ksf}$$

The vertical loads are summarized in Table 11.4.2.9.

Table 11.4.2.9 Factored Vertical Loading on Heel

Load Combination	Vertical load P_{uheel} (kips)	Max. vertical pressure (ksf)	Min. vertical pressure (ksf)	Distance x_0 from toe to 0 pressure (ft)	Heel pressure at jct. of stem/heel (ksf)	Upward vertical load on heel (kip)	Net vertical load P_{unet} (kip)
Strength Ia	9.92	3.28	0.43	na	1.73	4.19	5.73
Strength Ib	14.02	3.47	1.77	na	2.55	8.38	5.64
Extreme IIa	6.99	3.31	0.00	7.74	1.33	2.07	4.92
Extreme IIb	9.46	3.58	0.53	na	1.92	4.75	4.71
Service	9.89	2.40	1.45	na	1.88	6.46	3.43

Since the heel length of 3.88 ft is more than $3d_v$= 3.28 ft, we cannot use the simplifications from 5.8.3.4.1 and must calculate β.

Therefore, we will need to calculate the downward moment caused by these loads in order to calculate ε_s below. The moment will also be used to size the flexural reinforcement in Article 11.4.2M.

$$M_{uheel} = \gamma_{DC} \cdot M_{DC} + \gamma_{EV} \cdot M_{EV} + \gamma_{EH} \cdot M_{EH} + \gamma_{LS} \cdot M_{LS}$$

$$= 0.90 \cdot 1.61 + 1.0 \cdot (11.74 + 0.08 + 0.39) + 1.5 \cdot 5.78 + 1.75 \cdot 1.55$$

$$= 25.04 \text{ kip - ft}$$

We also need to calculate the moment caused by the upward pressure.

$$M_{up-heel} = 0.43 \cdot 3.88 \cdot \frac{3.88}{2} + \frac{1}{2} \cdot (1.73 - 0.43) \cdot 3.88 \cdot \frac{3.88}{3}$$

$$= 6.50 \text{ kip} - \text{ft}$$

$$M_{unet} = M_u - M_{up-heel} = 25.04 - 6.50 = 18.54 \text{ kip} - \text{ft}$$

The vertical moments are summarized in Table 11.4.2.10.

Table 11.4.2.10 Vertical Moments Acting on Heel

Load Combination	Downward vertical moment M_{uheel} (k-ft)	Upward moment from bearing pressure $M_{up\text{-}heel}$ (kip-ft)	Net vertical moment M_{unet} (kip-ft)
Strength Ia	25.04	6.50	18.54
Strength Ib	33.03	15.28	17.75
Extreme IIa	13.66	3.34	10.32
Extreme IIb	18.50	7.48	11.02
Service	22.95	11.99	10.96

[5.8.3.3]

We can then calculate the shear capacity of the heel, assuming no transverse reinforcement.

$$V_c = 0.0316 \cdot \beta \cdot \sqrt{f'_c} \cdot b_v \cdot d_v$$

We will design the footing so that shear reinforcement is not needed, so we will use equation 5.8.3.4.2-2 to calculate β. Axial compression will also be ignored.

$$\beta = \frac{4.8}{(1 + 750\varepsilon_s)} \cdot \frac{51}{(39 + s_{xe})}$$

$$\varepsilon_s = \frac{\frac{M_{uheel}}{d_v} + V_{uheel}}{E_s A_s}$$

[C5.13.3.6.1]

The critical section for shear on the heel is at the heel/back face of stem junction.

M_{unet} = 18.54 kip-ft
V_{uheel} = P_{unet} =5.73 kips
d_v =13.31 in from before
A_s = 0.44 in^2 assuming #6 bars @ 12″ for top transverse reinforcement

$$\varepsilon_s = \frac{\frac{18.54 \cdot 12}{13.31} + 5.73}{29000 \cdot 0.44} = 0.00176$$

Next, determine s_{xe}:

$$s_{xe} = s_x \cdot \frac{1.38}{a_g + 0.63}$$

Referring to AASHTO Figure 5.8.3.4.2-3(a),

$$s_x = d_v = 13.31 \text{ in}$$

a_g = maximum aggregate size = 0.75 in (smallest max aggregate size for Concrete Mix 1G52, which is conservative)

$$s_{xe} = 13.31 \cdot \frac{1.38}{0.75 + 0.63} = 13.31 \text{ in}$$

$$\beta = \frac{4.8}{1 + 750 \cdot 0.00176} \cdot \frac{51}{39 + 13.31} = 2.02$$

Calculate shear capacity of a one foot wide strip of the footing:

[5.5.4.2.1]

$$V_c = 0.0316 \cdot 2.02 \cdot \sqrt{4} \cdot 12 \cdot 13.31 = 20.39 \text{ kips}$$

ϕ = 0.90 for shear on normal weight concrete

$$\phi V_c = 0.90 \cdot 20.39 = 18.35 \text{ kips}$$

Compare the shear capacity to the factored shear demand:

$$\phi V_c = 18.35 \text{ kips} > V_{uheel} = 5.73 \text{ kips}$$ <u>OK</u>

This procedure can be repeated for all load cases. The results are summarized in Table 11.4.2.11.

Table 11.4.2.11 Heel Shear Check

Load Combination	V_{uheel} (kips)	Net vertical moment M_{unet} (kip-ft)	ε_s	β	ϕV_c (kip/ft)	$\phi V_c > V_{uheel}$?
Strength Ia	5.73	18.54	0.00176	2.02	18.35	YES
Strength Ib	5.64	17.75	0.00170	2.06	18.71	YES
Extreme IIa	4.92	10.32	0.00111	2.55	23.17	YES
Extreme IIb	4.71	11.02	0.00115	2.51	22.81	YES
Service	3.43	10.96	0.00104	2.63	23.90	YES

Check Toe for Shear

The shear demand on the toe will be calculated by using the upward bearing pressure and ignoring the downward load from the soil cover over the toe. The maximum and minimum bearing pressures across the width of the footing have already been calculated. We will need to calculate the bearing pressure at d_v from the front face of the stem.

d_{vtoe} = 13.32 in = 1.11 ft

σ_{pmax} = 3.28 kip/ft^2

σ_{pmin} = 0.43 kip/ft^2

$$\sigma_{pdvtoe} = 3.28 - (3.28 - 0.43) \cdot \left(\frac{2.58 - 1.11}{8.5}\right) = 2.79 \text{ ksf}$$

$$P_{udvtoe} = \frac{2.79 + 3.28}{2} \cdot (2.58 - 1.11) = 4.46 \text{ kips}$$

$$V_{udvtoe} = P_{udvtoe} = 4.46 \text{ kips}$$

The shear capacity of the toe will be calculated in the same manner as it was for the heel:

$$V_c = 0.0316 \cdot \beta \cdot \sqrt{f'_c} \cdot b_v d_v$$

Since the toe length of 2.58 ft is less than $3d_v$=3.33 ft, the provisions of 5.8.3.4.1 can be used and β can be taken as 2.

Calculate shear capacity of a one foot wide strip of the footing:

$$V_c = 0.0316 \cdot 2.0 \cdot \sqrt{4} \cdot 12 \cdot 13.32 = 20.2 \text{ kips}$$

ϕ = 0.90 for shear on normal weight concrete

$$\phi V_c = 0.90 \cdot 20.2 = 18.2 \text{ kips}$$

Compare the shear capacity to the factored shear demand.

$$\phi V_c = 18.2 \text{ kips} > V_{utoe} = 4.46 \text{ kips} \qquad \underline{\text{OK}}$$

Since the simplification of β=2 is in use, the shear capacity of the section will be the same for all load combinations. The bearing pressure will depend on the load combinations.

Table 11.4.2.12 summarizes the results of the toe shear check.

Table 11.4.2.12 Toe Shear Check

Load Combination	Max. vertical pressure (ksf)	Min. vertical pressure (ksf)	Distance x_0 from heel to 0 pressure (ft)	Pressure at front face of stem (ksf)	Pressure at d_v from front face of stem (ksf)	V_{utoe} (kips)	ϕV_c (kips)	$\phi V_c \geq V_{utoe}$
Strength Ia	3.28	0.43	na	2.41	2.79	4.46	18.2	YES
Strength Ib	3.47	1.77	na	2.95	3.18	4.89	18.2	YES
Extreme IIa	3.31	0.00	7.74	2.21	3.03	4.66	18.2	YES
Extreme IIb	3.58	0.53	na	2.65	3.05	4.87	18.2	YES
Service	2.40	1.45	na	2.11	2.24	3.41	18.2	YES

M. Design Footing Reinforcement [5.13.3.4]

Each mat of reinforcement is checked to ensure that it has adequate capacity and that minimum reinforcement checks are satisfied.

The top transverse reinforcement is designed by assuming that the heel acts as a cantilever loaded by the vertical loads above the heel. The upward bearing pressure is subtracted off the downward vertical loads.

The bottom transverse reinforcement is designed by assuming that the toe acts as a cantilever loaded by the upward bearing pressure on the heel. The soil cover above the toe is ignored.

The critical section for flexure in the footing is on either side of the stem.

Top Transverse Reinforcement

Assuming ϕ = 0.90 and using M_{unet} calculated for the Strength Ia check, set up the flexural capacity equation to solve for required steel area:

$$M_u = \phi M_n = \phi \cdot A_s \cdot f_y \left(d_s - \frac{a}{2} \right)$$

$$M_u = \phi \cdot A_s \cdot f_y \left(d_s - \frac{A_s \cdot f_y}{1.7 \cdot f_c' \cdot b} \right)$$

$$M_u = 0.90 \cdot A_s \cdot 60 \cdot \left(d_s - \frac{A_s \cdot 60}{1.7 \cdot 4 \cdot 12}\right) \cdot \left(\frac{1}{12}\right)$$

$$3.309 \cdot A_s^2 - 4.5 \cdot d_s \cdot A_s + M_u = 0$$

From the shear check of the heel, M_{unet} = 18.54 k-ft

For 3" clear cover and #7 bars, d_s = 13.63 in

Substituting and solving for A_s, we get:

Required A_s = 0.31 in^2/ft

Try #6 bars @ 12", A_s = 0.44 in^2/ft

Check that assumed ϕ = 0.90 is correct:

$$c = \frac{A_s \cdot f_y}{0.85 f_c' \cdot \beta_1 \cdot b} = \frac{0.44 \cdot 60}{0.85 \cdot 4 \cdot 0.85 \cdot 12} = 0.76 \text{ in}$$

[5.7.2.1] Concrete compression strain limit $\varepsilon_c = 0.003$

[Table C5.7.2.1-1] Reinforcement tension-controlled strain limit $\varepsilon_{tl} = 0.005$

$$\varepsilon_t = (d - c)\left(\frac{\varepsilon_c}{c}\right) = (13.63 - 0.76)\left(\frac{0.003}{0.76}\right) = 0.0508 > \varepsilon_{tl} = 0.005$$

Therefore, ϕ = 0.90

Check Minimum Reinforcement

[5.7.3.3.2] Determine the cracking moment:

λ = 1.0 for normal weight concrete

[5.4.2.6] $f_r = 0.24 \cdot \lambda \cdot \sqrt{f'_c} = 0.24 \cdot 1.0 \cdot \sqrt{4} = 0.48$ ksi

$$I_g = \frac{1}{12} \cdot b \cdot t^3 = \frac{1}{12} \cdot 12 \cdot (17)^3 = 4913 \text{ in}^4$$

$$y_t = \frac{1}{2} \cdot t = \frac{1}{2} \cdot 17 = 8.5 \text{ in}$$

Using $\gamma_1 = 1.6$ and γ_3=0.67 for ASTM 615 Grade 60 reinforcement,

$$M_{cr} = \gamma_3 \cdot \gamma_1 \cdot \frac{f_r \cdot I_g}{y_t} = 0.67 \cdot 1.6 \cdot \frac{0.48 \cdot 4913}{8.5 \cdot (12)} = 24.8 \text{ kip-ft}$$

The capacity of the section must be greater than or equal to the smaller of:

M_{cr} = 24.8 kip-ft

or $1.33 \cdot M_u = 1.33 \cdot 18.54 = 24.7$ kip – ft <u>GOVERNS</u>

The capacity of the top mat of reinforcement is:

$M_r = \phi A_s f_y (d_s - a/2)$

For #6 bars, d_s = 13.63 in

$$M_r = 0.9 \cdot (0.44)\cdot(60)\cdot\left[13.63 - \frac{0.44\cdot(60)}{2\cdot(0.85)\cdot(4)\cdot(12)}\right]\cdot\frac{1}{12}$$

M_r = 26.3 kip-ft > 24.7 kip-ft <u>OK</u>

Use #6 bars @ 12" (A_s = 0.44 in^2/ft) for top transverse reinforcement in the footing.

Bottom Transverse Reinforcement

The moment acting on the toe from the upward bearing pressure can be determined based on the data that was calculated for the Strength Ib toe shear check.

$$M_u = V_u \cdot \text{moment arm}$$

For a toe length of 2.58 ft and knowing the vertical pressures at either end of the toe, the moment can be calculated as:

$$M_u = 2.95\cdot 2.58\cdot\frac{2.58}{2} + \frac{1}{2}(3.47 - 2.95)\cdot 2.58\cdot\frac{2}{3}\cdot 2.58 = 10.97 \text{ kip-ft}$$

For 5" clear cover and #5 bars, d_s = 13.19 in

Again use: $3.309\cdot A_s^2 - 4.5\cdot d_s\cdot A_s + M_u = 0$

Substituting and solving for A_s, we get:

Required A_s = 0.19 in^2/ft

Try #5 bars @12", A_s = 0.31 in^2/ft

Check Minimum Reinforcement

[5.7.3.3.2]

$$I_g = \frac{1}{12}\cdot b\cdot t^3 = \frac{1}{12}\cdot 12\cdot(18.50)^3 = 6332 \text{ in}^4$$

$$y_t = \frac{1}{2}\cdot t = \frac{1}{2}\cdot 18.50 = 9.25 \text{ in}$$

Use $\gamma_1 = 1.6$ and γ_3=0.67 for ASTM 615 Grade 60 reinforcement.

Then:

$$M_{cr} = \gamma_3 \cdot \gamma_1 \cdot \frac{f_r \cdot I_g}{y_t} = 0.67 \cdot 1.6 \cdot \frac{0.48 \cdot 6332}{9.25 \cdot (12)} = 29.4 \text{ kip-ft}$$

The capacity of the section must be greater than or equal to the smaller of:

M_{cr} = 29.4 kip-ft

or $1.33 \cdot M_u = 1.33 \cdot 10.97 = 14.6$ kip-ft GOVERNS

Compute the capacity of the provided steel:

$M_r = \phi A_s f_y (d_s - a/2)$

$$M_r = 0.9\ (0.31) \cdot (60) \cdot \left[13.19 - \frac{0.31 \cdot (60)}{2 \cdot (0.85) \cdot (4) \cdot (12)}\right] \cdot \left(\frac{1}{12}\right)$$

M_r = 18.1 ft-kips > 14.6 kip-ft OK

Use #5 bars @ 12" (A_s =0.31 in^2/ft) for bottom transverse reinforcement in the footing.

Longitudinal Reinforcement

[5.10.8]

Provide longitudinal reinforcement in the footing based on shrinkage and temperature requirements.

$$A_s \geq \frac{1.30 \cdot b \cdot h}{2 \cdot (b + h) \cdot f_y} = \frac{1.30 \cdot 102 \cdot 18.5}{2 \cdot (102 + 18.5) \cdot 60} = 0.17 \text{ in}^2$$

$0.11 \leq A_s \leq 0.60$

Use #5 bars @ 12" (A_s = 0.31 in^2/ft) for top and bottom longitudinal reinforcement in the footing.

N. Determine Loads For Wall Stem Design

The loads on the stem at the top of the footing can now be determined to arrive at the design forces for the wall. The stem will be designed for at-rest earth pressure. This will govern the design of the back face vertical bars.

We will calculate the at-rest earth pressure coefficient in accordance with the geotechnical design assumptions given on the MnDOT Standard Plan Sheet 5-297.639, which contains the cast-in-place retaining wall basis for design:

$K_O = 1 - \sin(\phi_{fret})$

But the coefficient must be modified to account for the sloped backfill:

$$K_{O\beta} = K_O \cdot (1 + \sin(\beta))$$

This modification is based on an equation used in the Danish Code (Danish Geotechnical Institute 1978).

$$K_O = 1 - \sin(35) = 0.426$$

$$K_{O\beta} = 0.426 \cdot (1 + \sin(9.46)) = 0.496$$

The loading at any height along the stem, where the height y_{stem} is measured below the groundline, will be due to the combination of lateral earth pressure and live load surcharge.

Lateral Earth Pressure:

$$V_{EH} = \frac{1}{2} \cdot \gamma_s \cdot K_{O\beta} \cdot y_{stem}^2$$

$$M_{EH} = V_{EH} \cdot \frac{y_{stem}}{3}$$

$$= \frac{1}{6} \cdot \gamma_s \cdot K_{O\beta} \cdot y_{stem}^3$$

Although this force acts at an angle parallel to the backfill slope from the horizontal, we will conservatively apply it horizontally for stem design.

The horizontal load due to the live load surcharge can be computed similarly:

$$V_{LS} = \gamma_s \cdot K_O \cdot 2 \cdot y_{stem}$$

$$M_{LS} = V_{LS} \cdot \frac{y_{stem}}{2}$$

$$= \gamma_s \cdot K_O \cdot 2 \cdot \frac{y_{stem}^2}{2}$$

O. Determine Load Combinations For Stem Design

By inspection, we can see that Strength Ia and Extreme Event IIa are the possible load combinations that could govern the design of the stem since they maximize the horizontal loads.

In checking global stability and footing design, it was assumed that the 54 kip CT load was distributed uniformly over a 30.5 foot panel. For stem design, this assumption is not appropriate. The collision load will be distributed over some length less than 30.5 feet. In order to properly consider the collision load, the stem was analyzed using a finite element

model and found to be sufficient. Consequently, the Extreme Event load cases will not be considered in the design of the stem.

P. Determine Factored Loads and Moments For Stem Design

The load factors from Table 11.4.2.3 are to be used with the following modification:

- Apply a factor of 1.35 to horizontal earth pressure in the at-rest condition per AASHTO LRFD Table 3.4.1-2.

Factoring the loads for the Strength Ia load combination,

$$V_u = \gamma_{EHIa_AR} \cdot V_{EH} + \gamma_{LSIa} \cdot V_{LS}$$

$$= 1.35 \cdot V_{EH} + 1.75 \cdot V_{LS}$$

Factoring the moments for the Strength Ia load combination:

$$M_u = \gamma_{EHIa_AR} \cdot M_{EH} + \gamma_{LSIa} \cdot M_{LS}$$

$$= 1.35 \cdot M_{EH} + 1.75 \cdot M_{LS}$$

We then need to determine the design moment at each wall height based on the minimum reinforcement provisions.

[5.7.3.3.2]

Compute the cracking moment:

$$M_{cr} = \gamma_3 \cdot \gamma_1 \cdot f_r \cdot S_c$$

$$f_r = 0.24 \cdot \lambda \cdot \sqrt{f'_c} = 0.241 \cdot 1.0 \cdot \sqrt{4} = 0.48 \text{ ksi}$$

$$S_c = \frac{bh^2}{6}$$

b = 1 ft wide section of wall we are designing

h = thickness of stem at height considered

$$= 18 + \frac{y_{stem} \cdot 12}{24} \quad \text{where } y_{stem} \text{ is in feet}$$

γ_3 = 0.67 for ASTM A615 Grade 60 reinforcement
γ_1 = 1.6 for all other concrete structures

$$M_{cr} = \left[0.67 \cdot 1.6 \cdot 0.48 \cdot \frac{\left(12 \cdot \left(18 + \frac{y_{stem}}{2}\right)^2\right)}{6} \right] \cdot \frac{1}{12}$$

$$= 27.8 + 1.54 \cdot y_{stem} + 0.02144 \cdot y_{stem}^2$$

where y_{stem} is in feet and M_{cr} is in kip-ft

Then the design moment, M_{des}, will be:

If $M_u \geq M_{cr}$, $M_{des} = M_u$

If $M_u < M_{cr}$ and $1.33M_u \leq M_{cr}$, $M_{des} = 1.33M_u$

If $M_u < M_{cr}$ and $1.33M_u > M_{cr}$, $M_{des} = M_{cr}$

Tables 11.4.2.13 and 11.4.2.14 summarize the stem moments and shears.

Table 11.4.2.13 Design Moment on Stem

y_{stem} (ft)	M_{EH} (kip-ft)	M_{LS} (kip-ft)	$M_{service}$ (kip-ft)	M_u (kip-ft)	$1.33 \cdot M_u$ (kip-ft)	M_{cr} (kip-ft)	M_{des} (kip-ft)
2	0.1	0.2	0.3	0.5	0.7	31.0	0.7
4	0.6	0.8	1.4	2.2	2.9	34.3	2.9
6	2.1	1.8	3.9	6.0	8.0	37.8	8.0
8	5.1	3.3	8.4	12.7	16.9	41.5	16.9
9	7.2	4.1	11.3	16.9	22.5	43.4	22.5
10	9.9	5.1	15.0	22.3	29.7	45.3	29.7
11	13.2	6.2	19.4	28.7	38.2	47.3	38.2
12	17.1	7.4	24.5	36.0	47.9	49.4	47.9
13	21.8	8.6	30.4	44.5	59.2	51.4	51.4

Table 11.4.2.14 Design Shear on Stem

y_{stem} (ft)	V_{EH} (kip)	V_{LS} (kip)	$V_{service}$ (kip)	V_u (kip)
2	0.1	0.2	0.3	0.5
4	0.5	0.4	0.9	1.4
6	1.1	0.6	1.7	2.5
8	1.9	0.8	2.7	4.0
9	2.4	0.9	3.3	4.8
10	3.0	1.0	4.0	5.8
11	3.6	1.1	4.7	6.8
12	4.3	1.2	5.5	7.9
13	5.0	1.3	6.3	9.0

P. Wall Stem Design – Investigate Strength Limit State

Since this example is based on the current MnDOT LRFD Cast-In-Place Retaining Wall Standards (Standard Plan Sheets 5-297.620 to .635), the bar designation from the standards will be used. Each bar is designated by a letter of the alphabet. See Figure 11.4.2.6.

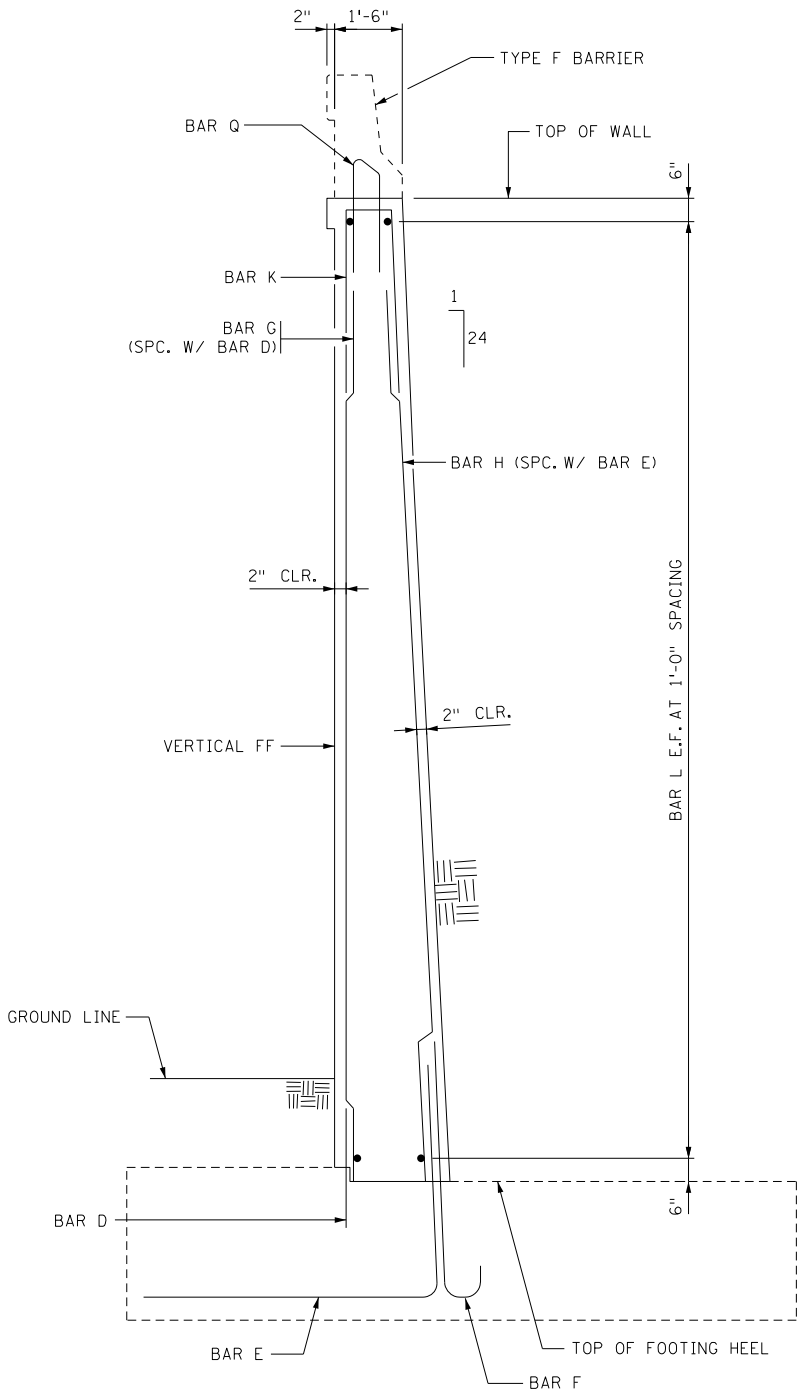

Figure 11.4.2.6

In determination of the back face reinforcement, the bars to be considered are bars E, F, H, and K. Bars E, H, and K are lapped together with Class B lap splices and are spaced at 12 inches. Bar F is also spaced at 12 inches, alternating with Bar E.

First, we will determine the reinforcement required at the base of the stem. Then for Bar F, we will calculate the location above the stem/footing interface where it can be dropped.

Assuming ϕ = 0.90, set up the flexural capacity equation to solve for required steel area:

$$M_u = \phi M_n = \phi \cdot A_s \cdot f_y \left(d_s - \frac{a}{2} \right)$$

$$M_u = \phi \cdot A_s \cdot f_y \left(d_s - \frac{A_s \cdot f_y}{1.7 \cdot f'_c \cdot b} \right)$$

$$M_u = 0.90 \cdot A_s \cdot 60 \cdot \left(d_s - \frac{A_s \cdot 60}{1.7 \cdot 4 \cdot 12} \right) \cdot \left(\frac{1}{12} \right)$$

$$3.309 \cdot A_s^2 - 4.5 \cdot d_s \cdot A_s + M_u = 0$$

Assuming #5 bars with 2" clear cover at the stem/footing interface,

d_s = 24.5 – 2 – 0.5 · (0.625) = 22.19 in

M_{des} = 51.4 k-ft

Substituting and solving for A_s, we get:

Required A_s = 0.52 in^2/ft

Try #5 bars @ 6", A_s = 0.62 in^2/ft, ϕM_n = 60.6 k-ft

This accounts for Bar E spaced at 12" and Bar F spaced at 12".

Check that assumed ϕ = 0.90 is correct:

$$c = \frac{A_s \cdot f_y}{0.85 f'_c \cdot \beta_1 \cdot b} = \frac{0.62 \cdot 60}{0.85 \cdot 4 \cdot 0.85 \cdot 12} = 1.07 \text{ in}$$

[5.7.2.1] Concrete compression strain limit $\varepsilon_c = 0.003$

[Table C5.7.2.1-1] Reinforcement tension-controlled strain limit $\varepsilon_{tl} = 0.005$

$$\varepsilon_t = (d - c)\left(\frac{\varepsilon_c}{c} \right) = (22.19 - 1.07)\left(\frac{0.003}{1.07} \right) = 0.059 > \varepsilon_{tl} = 0.005$$

Therefore, ϕ = 0.90

An initial estimate for the point at which Bar F is no longer needed is made using Table 11.4.2.13. Since dropping Bar F will leave us with half of the reinforcement provided at the base of the stem, scan the table for the height at which M_{des} is approximately half the value of ϕM_n at the base of the stem. The table shows that this occurs at y_{stem}= 10', where

M_{des} = 29.7 kip-ft. Therefore, the point above the footing where Bar F is no longer needed is around:

y_{stem} = 10 ft, at which d_s = 20.69 in

Solving for A_s, we get:

Required A_s = 0.32 in^2/ft

For #5 bars at 12", A_s =0.31 in^2/ft. Therefore, Bar F is still needed at 10 ft below the ground line. Check if Bar F is needed at y_{stem} = 9.75 ft.

At y_{stem} = 9.75 ft, the depth d_s = 20.57 in, and M_{des} = 27.9 k-ft.

Solving for A_s, we get:

Required A_s = 0.31 in^2/ft <u>OK</u>

[5.11.1.2.1] Reinforcement is required to extend beyond the point at which it is no longer required to the greater of:

d_s = 20.57 in <u>GOVERNS</u>

or $15 \cdot d_b = 15 \cdot 0.625 = 9.38$ in

Use an extension of 21 in = 1.75 ft

Therefore, provide a projection x_{proj} above the top of footing for Bar F of:

x_{proj} = 13 – 9.75 + 1.75 = 5.00 ft

Bar F must be fully developed at the stem/footing interface. For epoxy coated #5 bars the basic development length ℓ_{db} is:

$$\ell_{db} \cdot = \frac{2.4 \cdot d_b \cdot f_y}{\sqrt{f'_c}} = \frac{2.4 \cdot 0.625 \cdot 60}{\sqrt{4.0}} = 45.0 \text{ in.}$$

The modification factors to the development length are:

λ_{cf} = 1.2 for epoxy coated bars with cover greater than 3 bar diameters and clear spacing greater than 6 bar diameters

λ_{rl} = 1.0 for vertical bars

λ = 1.0 for normal weight concrete

λ_{er} = 1.0 taken conservatively assuming $A_{sprovided} = A_{srequired}$

For determination of λ_{rc}:

c_b = 2.31 in. (governed by 2.0 clear + 0.5 · bar diameter)

A_{tr} = 0 since there are no bars that cross the potential splitting planes

Then k_{tr} = 0

$$\lambda_{rc} = \frac{d_b}{c_b + k_{tr}} = \frac{0.625}{2.31 + 0} = 0.27 < 0.4$$

So $\lambda_{rc} = 0.4$

Then the development length ℓ_d is:

$$\ell_d = \frac{\ell_{db} \cdot (\lambda_{rl} \cdot \lambda_{cf} \cdot \lambda_{rc} \cdot \lambda_{er})}{\lambda} = \frac{45.0 \cdot (1.0 \cdot 1.2 \cdot 0.4 \cdot 1.0)}{1.0} = 21.60 \text{ in.}$$

Therefore, projecting Bar F into the stem 5 feet (y_{stem} = 8 ft) will provide adequate back face reinforcement in the stem.

Table 11.4.2.15 summarizes the Strength Limit state check for the stem back face reinforcement over the stem height starting at y_{stem} = 8 ft.

Table 11.4.2.15 Moment Capacity of Stem

y_{stem} (ft)	Wall thickness (in)	d_s (in)	M_{des} (kip-ft)	Reqd A_s (in^2/ft)	Actual A_s (in^2/ft)	ϕM_n (kip-ft)	C/D
8	22.00	19.69	16.9	0.19	0.31	27.1	1.60
9	22.50	20.19	22.5	0.25	* 0.48	42.8	1.90
9.75	22.88	20.57	27.9	0.31	* 0.61	55.2	1.98
10	23.00	20.69	29.7	0.32	0.62	56.5	1.90
11	23.50	21.19	38.2	0.41	0.62	57.8	1.51
12	24.00	21.69	47.9	0.50	0.62	59.2	1.24
13	24.50	22.19	51.4	0.52	0.62	60.6	1.18

* A_s shown reflects partially developed Bar F with 0% development at y_{stem} = 8.00 ft.

Q. Wall Design – Investigate Service Limit State [5.7.3.4]

To ensure that the primary reinforcement is well distributed, crack control provisions are checked. They are dependent on the tensile stress in steel reinforcement at the service limit state, the concrete cover, and the geometric relationship between the crack width at the tension face versus the crack width at the reinforcement level (β_s). The Class 1 exposure factor is used (γ_e=1.0) since the back face of the stem is not exposed once constructed.

The reinforcement spacing must satisfy

$$s \le \frac{700 \cdot \gamma_e}{\beta_s \cdot f_{ss}} - 2 \cdot d_c$$

Solve the equation above for the allowable reinforcement stress, f_{ssa}:

$$f_{ssa} = \frac{700 \cdot \gamma_e}{\beta_s \cdot (s + 2 \cdot d_c)} \le 0.6 \cdot f_y$$

At y_{stem} = 13 ft, Bars E and F are each spaced at 12" and alternated, providing #5 bars @ 6", A_s = 0.62 in^2/ft:

$$d_c = 2.00 + \frac{0.625}{2} = 2.31 \text{ in}$$

$$s = 6 \text{ in}$$

The strain ratio, β_s, is defined as:

$$\beta_s = 1 + \frac{d_c}{0.7 \cdot (h - d_c)} = 1 + \frac{2.31}{0.7 \cdot (24.5 - 2.31)} = 1.15$$

The allowable stress, f_{ssa} is:

$$f_{ssa} = \frac{700 \cdot \gamma_e}{\beta_s \cdot (s + 2 \cdot d_c)} = \frac{700 \cdot 1.0}{1.15 \cdot (6 + 2 \cdot 2.31)} = 57.3 \quad \text{ksi}$$

or $f_{ssa} = 0.6 \cdot f_y = 0.6 \cdot 60 = 36.0$ ksi <u>GOVERNS</u>

[5.4.2.4]
[5.7.1]

Find the actual stress provided in the steel:

The transformed area of reinforcement is:
$n \cdot A_s = 8 \cdot (0.62) = 4.96$ in^2

Determine location of the neutral axis:

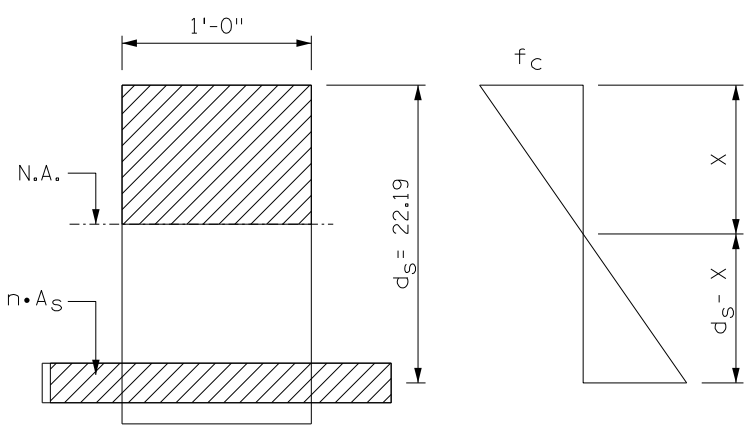

Figure 11.4.2.7

$$\frac{1}{2} \cdot b \cdot x^2 = n \cdot A_s (d_s - x)$$

$$\frac{1}{2} \cdot (12) \cdot x^2 = 4.96\ (22.19 - x) \qquad \text{solving, } x = 3.89 \text{ inches}$$

Then:

$$J \cdot d_s = d_s - \frac{x}{3} = 22.19 - \frac{3.89}{3} = 20.89 \text{ in}$$

$$\text{Actual } f_{ss} = \frac{M_{service}}{A_s \cdot j \cdot d_s} = \frac{30.4 \cdot 12}{0.62 \cdot (20.89)}$$

$$= 28.17 \text{ ksi} < 36.0 \text{ ksi}$$ OK

Table 11.4.2.16 summarizes the crack control check for the stem back face reinforcement over the height of the stem starting at y_{stem} = 8 ft.

Table 11.4.2.16 Crack Control Check

y_{stem} (ft)	$M_{service}$ (kip-ft)	Actual A_s (in^2/ft)	Bar spacing (in)	d_s (in)	β_s	f_{ssa} (ksi)	x (in)	$j \cdot d_s$ (in)	Actual f_{ss} (ksi)	C/D
8	8.4	0.31	12.0	19.69	1.17	36.0	2.65	18.81	17.29	2.08
9	11.3	* 0.48	12.0	20.19	1.16	36.0	3.29	19.09	14.80	2.43
9.75	14.1	* 0.61	12.0	20.57	1.16	36.0	3.70	19.34	14.34	2.51
10	15.0	0.62	6.0	20.69	1.16	36.0	3.74	19.44	14.93	2.41
11	19.4	0.62	6.0	21.19	1.16	36.0	3.79	19.93	18.84	1.91
12	24.5	0.62	6.0	21.69	1.15	36.0	3.84	20.41	23.23	1.55
13	30.4	0.62	6.0	22.19	1.15	36.0	3.89	20.89	28.17	1.28

* A_s shown reflects partially developed Bar F with 0% development at y_{stem} = 8.00 ft.

O. Wall Stem Design – Investigate Shear

Shear typically does not govern the design of retaining walls. If shear does become an issue, the thickness of the stem should be increased such that transverse reinforcement is not required. Calculations will be shown for the shear check at the bottom of the stem. Shear checks at other locations are summarized in Table 11.4.2.17

Conservatively ignoring the benefits of axial compression and the shear key, the shear capacity of the stem can be shown to be greater than that required.

[5.8.3.3-1]

$$V_n = V_c + V_s + V_p$$

Recognizing that V_s and V_p are zero,

$$V_n = V_c$$

[5.8.3.3-3]

$$V_c = 0.0316 \cdot \beta \cdot \sqrt{f'c} \cdot b_v \cdot d_v$$

[5.8.3.4.2]
[5.8.2.9]

At the bottom of the stem, the area of reinforcement is 0.62 in^2. The effective shear depth, d_v, is calculated as follows:

$$a = \frac{A_s \cdot f_y}{0.85 \cdot f'_c \cdot b} = \frac{0.62 \cdot 60}{0.85 \cdot 4 \cdot 12} = 0.91 \text{ in}$$

For #5 back face bars, d = 24.5 – 2 - 0.625/2 = 22.19 in

d_v is the max of: $0.72 \cdot h = 0.72 \cdot 24.5 = 17.64$ in
$0.9 \cdot d = 0.9 \cdot 22.19 = 19.97$ in
$d - a/2 = 22.19 - 0.91/2 = 21.74$ in <u>GOVERNS</u>

β will be calculated using the Sectional Design Model of 5.8.3.4.2.

The crack spacing parameter, s_{xe}, is taken as:

$$s_{xe} = s_x \cdot \frac{1.38}{a_g + 0.63} \quad \text{and} \quad 12 \text{ in} \le s_{xe} \le 80 \text{ in}$$

$s_x = d_v = 21.74$ in
$a_g = 0.75$ in (assumed)

Then

$$s_{xe} = 21.74 \cdot \frac{1.38}{0.75 + 0.63} = 21.74 \text{ in}$$

$$\varepsilon_s = \frac{\left(\frac{|M_u|}{d_v} + 0.5 \cdot N_u + |V_u|\right)}{E_s \cdot A_s} = \frac{\left(\frac{|44.5 \cdot 12|}{21.74} + 0.5 \cdot 0 + 9.0\right)}{29000 \cdot 0.62} = 0.00187$$

Where the magnitude of the moment, M_u, is not to be less than:

$M_u \ge V_u . d_v \ge 9.0 \cdot 21.74 \cdot 1/12 \ge$ = 16.3 k-ft <u>OK</u>

Because there is no shear reinforcement the value of β is taken as:

$$\beta = \frac{4.8}{1 + 750 \cdot \varepsilon_s} \cdot \frac{51}{39 + s_{xe}} = \frac{4.8}{1 + 750 \cdot 0.00187} \cdot \frac{51}{39 + 21.74} = 1.68$$

The factored shear resistance at y_{stem} = 13 is then:

$$\phi V_c = 0.9 \cdot 0.0316 \cdot 1.68 \cdot \sqrt{4} \cdot 12 \cdot 21.74$$

= 24.9 kips > V_u = 9.0 kips <u>OK</u>

Table 11.4.2.17 Stem Shear Check

y_{stem} (ft)	V_u (kip)	Actual A_s (in^2/ft)	M_u (kip-ft)	d_v (in)	$V_u \cdot d_v$ (k-ft)	ε_s	β	ϕV_n (kip)	C/D
2	0.5	0.31	0.5	16.46	0.7	0.00011	4.08	45.8	91.6
4	1.4	0.31	2.2	17.46	2.0	0.00032	3.50	41.7	29.8
6	2.5	0.31	6.0	18.46	3.8	0.00071	2.78	35.0	14.0
8	4.0	0.31	12.7	19.46	6.5	0.00132	2.10	27.9	6.98
9	4.8	0.31	16.9	19.96	8.0	0.00166	1.85	25.2	5.25
9.75	5.5	0.31	21.0	20.34	9.3	0.00199	1.66	23.0	4.18
10	5.8	* 0.35	22.3	20.44	9.9	0.00186	1.72	24.0	4.14
11	6.8	* 0.53	28.7	20.80	11.8	0.00152	1.91	27.1	3.99
12	7.9	0.62	36.0	21.24	14.0	0.00157	1.87	27.1	3.43
13	9.0	0.62	44.5	21.74	16.3	0.00187	1.68	24.9	2.77

* A_s shown reflects partially developed Bar F with 0% development at y_{stem} = 9.75 ft.

R. Design Front Face Vertical Reinforcement

The front face vertical reinforcement consists of Bar G lapped with Bar D. The LRFD standards examined wind loading in a construction limit state. This was envisioned as a point in construction where winds were high on the freestanding stem without backfill. In this state, the front face reinforcement is in tension and the concrete strength will have only achieved half its strength at the time of form removal.

For a wall with a 13 foot stem height, a #5 Bar D and a #4 Bar G spaced at 12 inches were found adequate for the design. With taller wall heights, there were cases where this did not meet the flexural demand. In those cases, a column design run was performed treating the stem as a doubly-reinforced section with an axial load equal to 90% of the stem self-weight. Using these assumptions, Bar G met the flexural and shear demands with a #4 size.

S. Design Stem Wall Shrinkage and Temperature Reinforcement [5.10.8]

To ensure good performance, a minimum amount of reinforcement needs to be placed near each face of concrete elements. This reinforcement limits the size of cracks associated with concrete shrinkage and temperature changes. Since the wall thickness varies, the average thickness was used.

$$A_s \geq \frac{1.30 \cdot b \cdot h}{2 \cdot (b + h) \cdot f_y} = \frac{1.30 \cdot 13 \cdot 12 \cdot 21.25}{2 \cdot (13 \cdot 12 + 21.25) \cdot 60} = 0.20 \quad in^2/ft$$

$$0.11 \leq A_s \leq 0.60$$

This is the minimum area of reinforcement that must be placed in each direction and on each face.

Use #4 @ 12" (A_s = 0.20 in^2/ft) for stem wall front back face horizontal bars (Bar L).

T. Summary

The wall section shown in Figure 11.4.2.8 summarizes the design of the retaining wall. Note that the spacing of the longitudinal footing bars is revised slightly from previous calculations for detailing purposes.

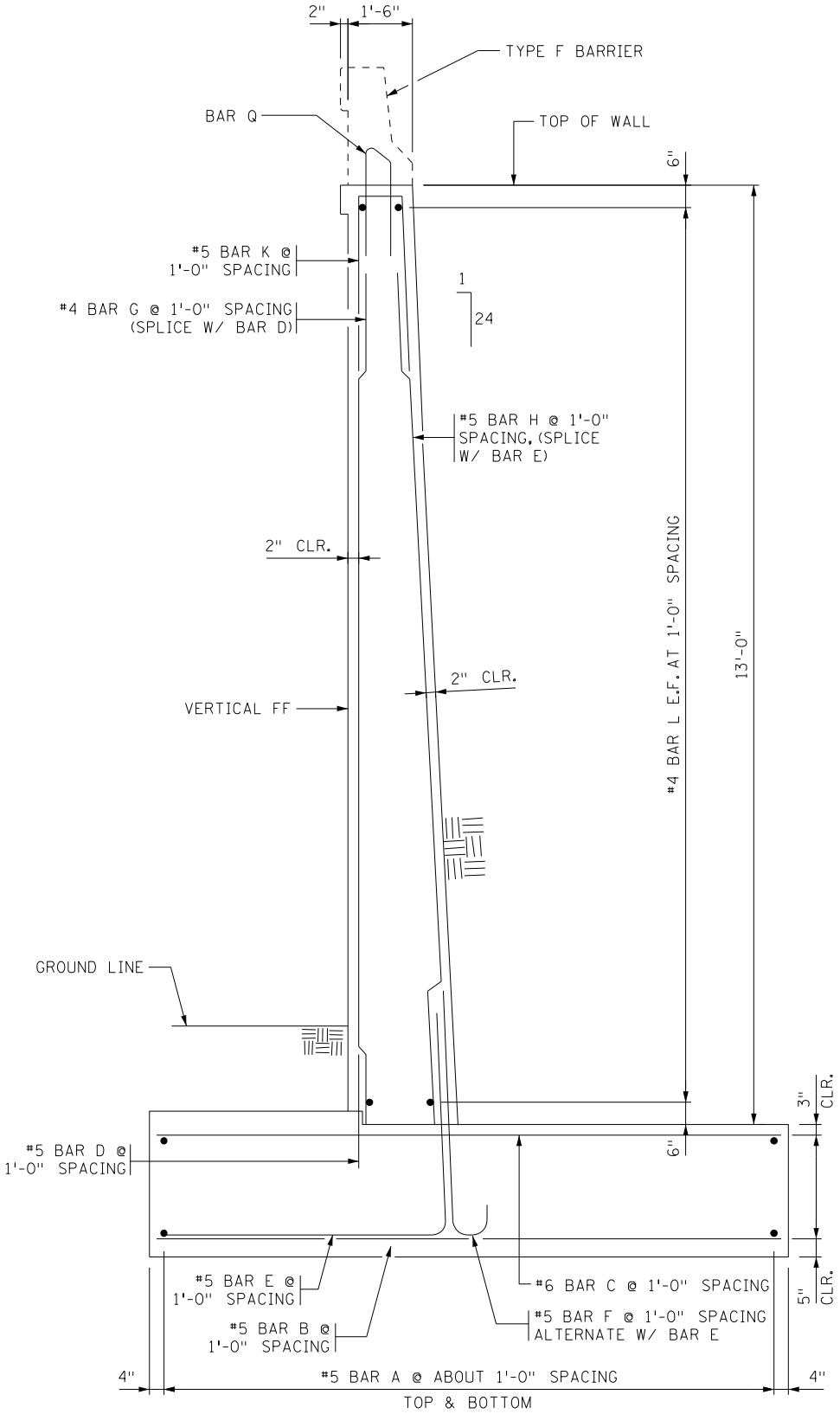

Retaining Wall Design Summary
Figure 11.4.2.8

[This page intentionally left blank.]

11.4.3 Three-Column Pier Design Example

This example illustrates the design of a reinforced concrete three-column pier. The bridge carries a two-way roadway consisting of one 12′-0″ traffic lane and one 12′-0″ shoulder in each direction. The superstructure has two equal spans of 130′-0″″ consisting of a 9″ deck supported by 63″ deep prestressed beams spaced 9′-0″ on center. The bridge has a Type "F" barrier (Fig. 5-397.115) on each side of the bridge deck and diaphragms are provided at the supports and at the interior third points. The superstructure is part of a grade-separation structure and is considered translationally fixed at the pier. The bearings are curved plate bearings (3¼″ in height, see Bridge Details B310). An end view of the pier is presented in Figure 11.4.3.1. Two sets of bearings rest on the pier cap, one set for the beams of each span. To simplify design, only one reaction is used per beam line, acting at the centerline of pier.

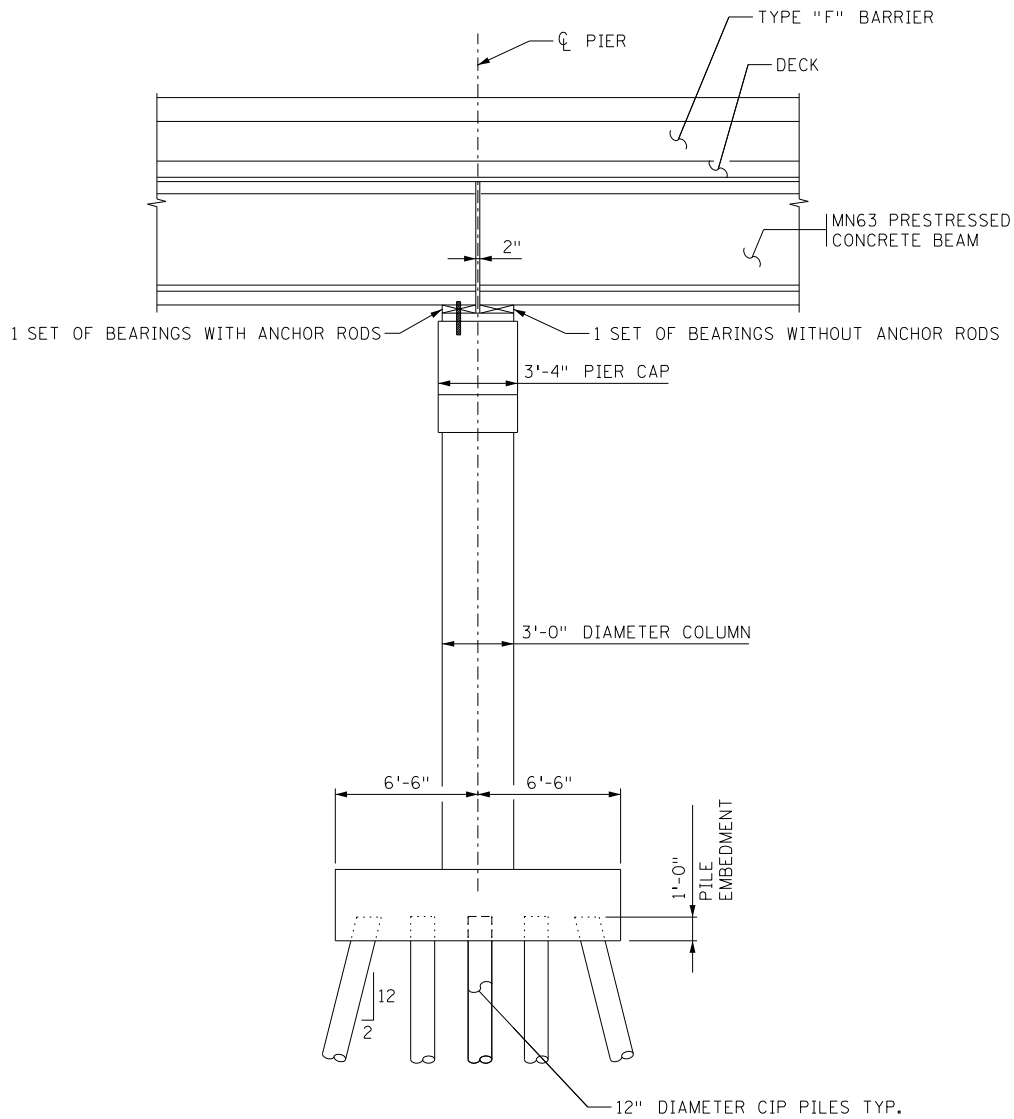

Figure 11.4.3.1

The pier cap is supported by three columns. The columns are supported by separate pile foundations. An elevation view of the pier is presented in Figure 11.4.3.2.

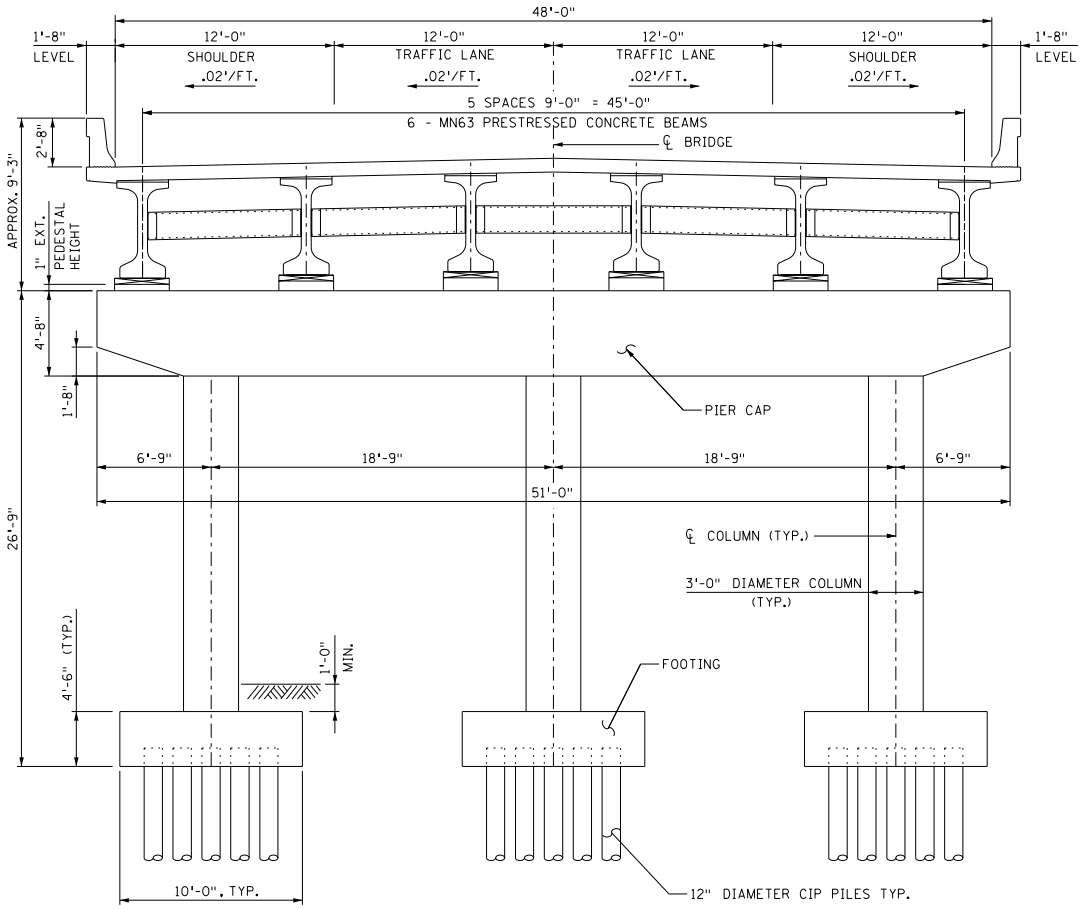

Figure
11.4.3.2
3-Column Pier - Elevation

Pier design is accomplished with a top down approach. The design parameters and loads are determined first - followed by the pier cap, column, and footing designs.

The following terms are used to describe the orientation of the structural components and loads. The terms "longitudinal" and "transverse" are used to describe global orientation relative to the superstructure and roadway. The terms "parallel" and "perpendicular" are used to define the orientations relative to the pier. The parallel dimension is the "long" direction of the structural component and the perpendicular dimension is 90º to the parallel dimension and is in the direction of the "short" side. The distinction becomes clear in describing the load path for lateral forces applied to bridges with substructures skewed to the superstructure.

Forces parallel and perpendicular to the pier arise from combining the component forces applied transversely and longitudinally to the superstructure. The pier for this example is not skewed, consequently transverse forces are equivalent to parallel pier forces. However, to ensure the clarity of future designs, the parallel and perpendicular nomenclature will be used.

A. Material and Design Parameters

Pier Cap

The cap must have sufficient length to support all of the beam lines and their bearings. It also must have sufficient width to support two lines of bearings and provide adequate edge distances for the bearings. Pedestals are constructed on the pier cap to accommodate the different heights at which the prestressed beams are supported due to the cross slope of the deck. When beginning a design, first determine the required width and then try a cap depth equal to 1.4 to 1.5 times the width.

Table 11.4.3.1 – Pier Cap Parameters

Parameter	Label	Value
Width of Pier Cap	b_{cap}	40 in
Length of Pier Cap	L_{cap}	51 ft = 612 in
Depth of Pier Cap at Center	d_{mid}	56 in
Depth of Pier Cap at Ends	d_{end}	36 in

Columns

In order to avoid interference between the column vertical bars and pier cap reinforcement, choose columns with a diameter slightly smaller than the width of the pier cap. Columns should also be proportioned relative to the depth of the superstructure. For 63” prestressed beams a column diameter of at least 36 inches should be used. (See Section 11.2.1.)

Table 11.4.3.2 – Column Parameters

Parameter	Label	Value
Column Diameter	d_{col}	36 in
Number of Columns	N_{col}	3
Column Cross-Sectional Area	A_g	$\frac{\pi \cdot 36^2}{4} = 1018 \text{ in}^2$
Column Moment of Inertia	I_g	$\frac{\pi \cdot 36^4}{64} = 82{,}450 \text{ in}^4$

Footing and Piles

A rectangular footing with the following properties will be tried initially:

Table 11.4.3.3 – Foundation Parameters

Parameter	Label	Value
Pile Type	-	Cast-In-Place
Pile Diameter	d_{pile}	12 in
Depth of Footing	d_{foot}	4.50 ft
Width of Footing Parallel to Pier	b_{foot}	10.0 ft
Length of Footing Perpendicular to Pier	L_{foot}	13.0 ft

Use the Bridge Construction Unit's Foundation Recommendations to identify the pile design capacity R_n and resistance factor ϕ_{dyn} to be used:

Nominal Capacity R_n = 200 tons/pile
Resistance Factor ϕ_{dyn} = 0.50
Bearing Resistance $R_r = 0.50 \cdot 200 = 100$ tons/pile = 200 kips/pile

Location of Columns

The outside columns should be positioned to minimize dead load moments in the columns and also balance the negative moments in the pier cap over the columns. A rule of thumb is to use an overhang dimension (measured from edge of outside column to centerline of exterior beam) equal to $^1/_5$ of the column spacing. After trying several layouts, outside columns located 18.75 feet from the center of the bridge were found to minimize design forces.

The following material weights and strengths are used in this example:

Table 11.4.3.4 – Unit Weights and Strengths

Parameter	Label	Value
Unit Weight of Concrete	γ_C	0.145 kcf (strength) 0.150 kcf (loads)
Concrete Compressive Strength	f'_c	4 ksi
Modulus of Elasticity, Concrete	E_c	$33{,}000 \cdot (0.145)^{1.5} \cdot \sqrt{4}$ = 3644 ksi
Yield Strength of Reinforcement	f_y	60 ksi
Modulus of Elasticity, Reinforcement	E_s	29,000 ksi
Modular Ratio	n	8
Soil Unit Weight	γ_{soil}	0.120 kcf

B. Determine Design Loads

The loads applied to the three-column pier include dead load, live load, braking force, wind on structure, wind on live load, and uniform temperature change. The pier is located more than 30 feet from the

edge of the travel lane, so vehicular collision forces will not be considered.

Application of Loads to the Structural Model

Aside from wind on substructure and internal temperature change forces, the loads applied to the pier are transferred from the superstructure to the pier cap via the bearings. Figure 11.4.3.3 illustrates the load components that are transferred from the bearings to the pier cap. At each girder location three load components are possible, a parallel force, a perpendicular force, and a vertical force. In the following load tables, vertical force components are identified as V_1 to V_6. Parallel forces have labels of L_{Par1} to L_{Par6}, and perpendicular forces are identified as L_{Perp1} to L_{Perp6}.

For several loads applied to the pier, the concrete deck was assumed to be a rigid diaphragm. A rigid deck assumption combined with the presence of diaphragms at the pier permits one to assume that the parallel and perpendicular wind loads can be evenly distributed among the bearings. Varying vertical reactions resist lateral and vertical loads that produce an overturning moment.

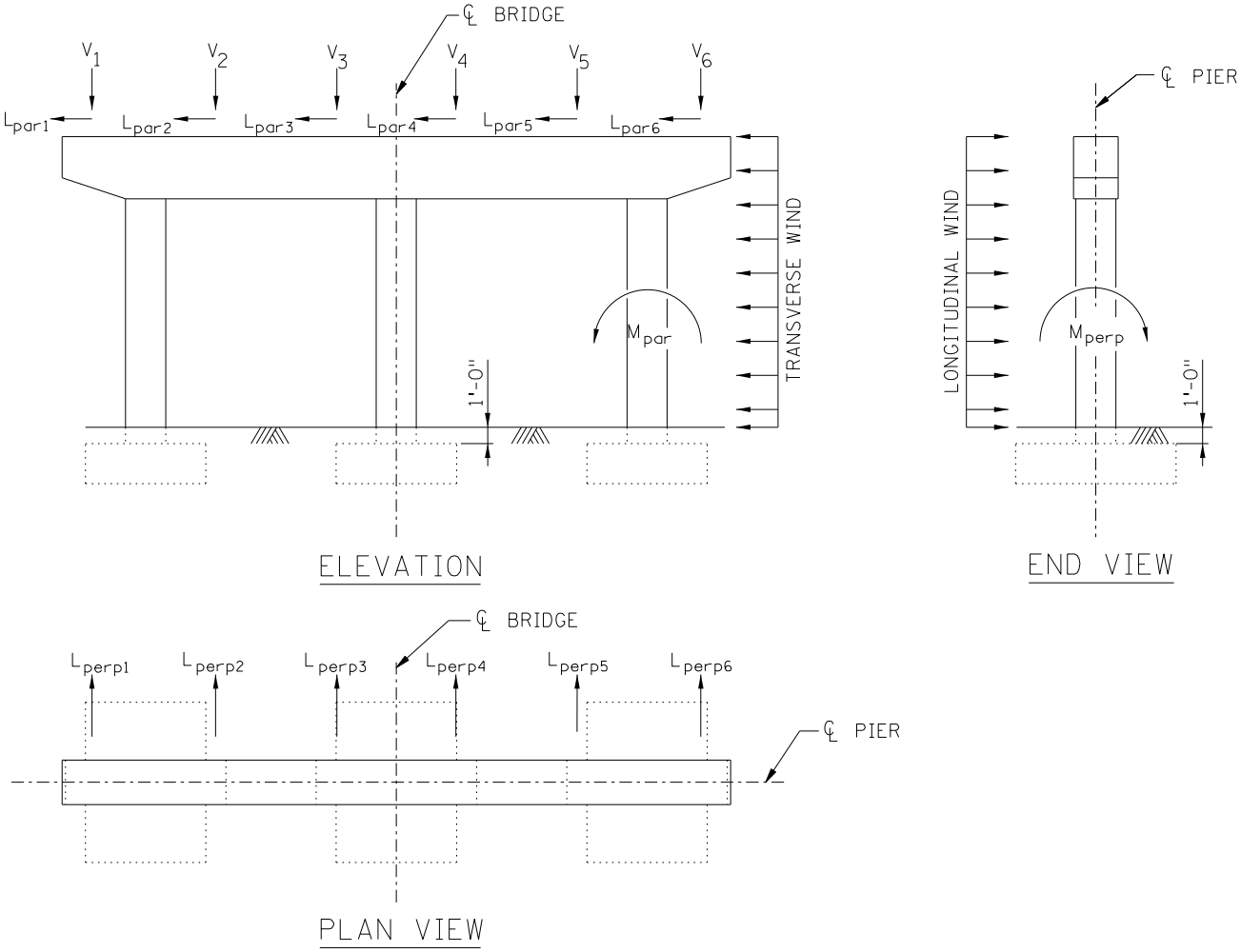

Figure 11.4.3.3
Loads Applied to the Pier

The superstructure dead loads applied to the pier consist of the following: the design shear in the prestressed beam at the centerline of bearing, the beam ends (portion of the beams beyond centerline of bearing), the portion of deck, stool, barrier, and future wearing course between centerline of bearings, the cross-frames at the pier, two sets of bearings per beam line, and the pedestals. (For this example, pedestals are considered part of the superstructure for load calculations.)

Assume the following for dead load calculations:

- a concrete stool height of 2.5 inches
- a pedestal size of 36 inches (perpendicular to pier) x 44 inches (parallel to pier) with average height of 3.5 inches
- 2 lines of interior diaphragms in each span
- 1 line of pier diaphragms in each span

Table 11.4.3.5 summarizes the superstructure dead loads.

Table 11.4.3.5 - Superstructure Dead Loads (kips)

Load	V1	V2	V3	V4	V5	V6
MN63 Beams	113.0	113.0	113.0	113.0	113.0	113.0
Interior Diaphragms	0.4	0.9	0.9	0.9	0.9	0.4
Pier Diaphragms	0.4	0.9	0.9	0.9	0.9	0.4
Deck	117.0	131.6	131.6	131.6	131.6	117.0
Stool	11.5	11.5	11.5	11.5	11.5	11.5
F-Barriers	20.1	20.1	20.1	20.1	20.1	20.1
Future Wearing Course (FWC)	20.8	20.8	20.8	20.8	20.8	20.8
Additional DC beyond the centerlines of bearing due to beams, deck, stool, barriers, and FWC	2.9	3.1	3.1	3.1	3.1	2.9
Bearings	0.5	0.5	0.5	0.5	0.5	0.5
Pedestals	0.7	0.7	0.7	0.7	0.7	0.7
Total	287.3	303.1	303.1	303.1	303.1	287.3

[3.6.1]

Live Load

First, the maximum reaction at the pier due to a single lane of HL-93 live load must be determined. After comparing results from several configurations, the double truck with lane load shown in Figure 11.4.3.4 was found to produce the largest reaction. For simply supported superstructures, the 0.9 multiplier per AASHTO Article 3.6.1.3.1 is used.

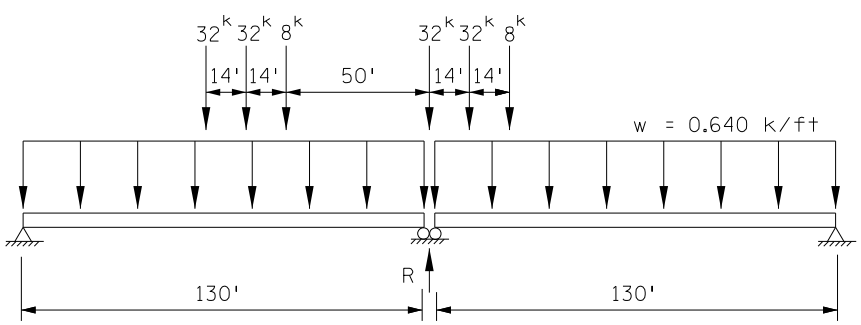

Figure 11.4.3.4
Live Load Configuration For Maximum Pier Reaction

[3.6.1.3.1]

[3.6.1.4.1]

Table 11.4.3.6 lists the live load reactions at the pier for different numbers of lanes loaded. It also includes the maximum reaction for fatigue, which occurs when the center axle of the fatigue truck is directly over the pier. Note that only 1 lane is used for the fatigue truck reaction calculation.

Table 11.4.3.6 – Live Load Reactions on Pier (per lane)

Loading	Truck Load Reaction with Dynamic Load Allowance (kips)	Lane Load Reaction (kips)	Product of Multiple Presence Factor and Double Truck Load Factors	Total Reaction R (kips)	Uniform Load w = R/10' (kips/ft)
1 Lane	134.1 - Double Truck	83.2	1.20·0.90=1.080	234.7	23.5
2 Lanes	134.1 – Double Truck	83.2	1.00·0.90=0.900	195.6	19.6
3 Lanes	134.1 - Double Truck	83.2	0.85·0.90=0.765	166.2	16.6
4 Lanes	134.1 - Double Truck	83.2	0.65·0.90=0.585	127.1	12.7
Fatigue	73.3 – Fatigue Truck	0.0	1.00	73.3	7.3

The next step is to determine the live load cases that will produce the maximum force effects in the cap, columns, and foundation of the pier. This is done by positioning the single lane reactions in lanes across the transverse bridge cross-section to get the desired effect.

For instance, to obtain the maximum positive moment in the pier cap, place one or two live load lane reactions on the deck such that the beams located between the columns receive the maximum load. Figure 11.4.3.5 illustrates the live load cases used in the example. Table 11.4.3.7 contains beam reactions for each of the load cases. Load distribution for determination of values in the table is based on assuming simple supports at each beam.

For example, for Live Load Case 2:

$$w = 23.5 \text{ kips/ft}$$

$$V_1 = V_6 = 0$$

$$V_2 = V_5 = 23.5 \cdot \frac{(9-8.50)^2}{2} \cdot \left(\frac{1}{9}\right) = 0.3 \text{ kips}$$

$$V_3 = V_4 = 23.5 \cdot 9 \cdot \frac{1}{2} + 23.5 \cdot 0.5 \cdot 8.75 \cdot \frac{1}{9} = 117.2 \text{ kips}$$

Other live load cases with slight variations in live load placement might be found that will result in greater load effects to the pier cap and columns, but the increase in magnitude is relatively small or does not govern the design and therefore has not been included in this example. For instance, only one case for 4 live load lanes was included in the check

for this example. Two other cases could be considered in place of Live Load Case 8. One case would consist of the two middle lanes abutting each other with a 2′-0″ gap between the center and outside lanes. The other case would include a 2′-0″ gap between the two middle lanes, and separate the outside and middle lanes by 1′-0″. The designer is responsible for investigating all load cases that may affect the design.

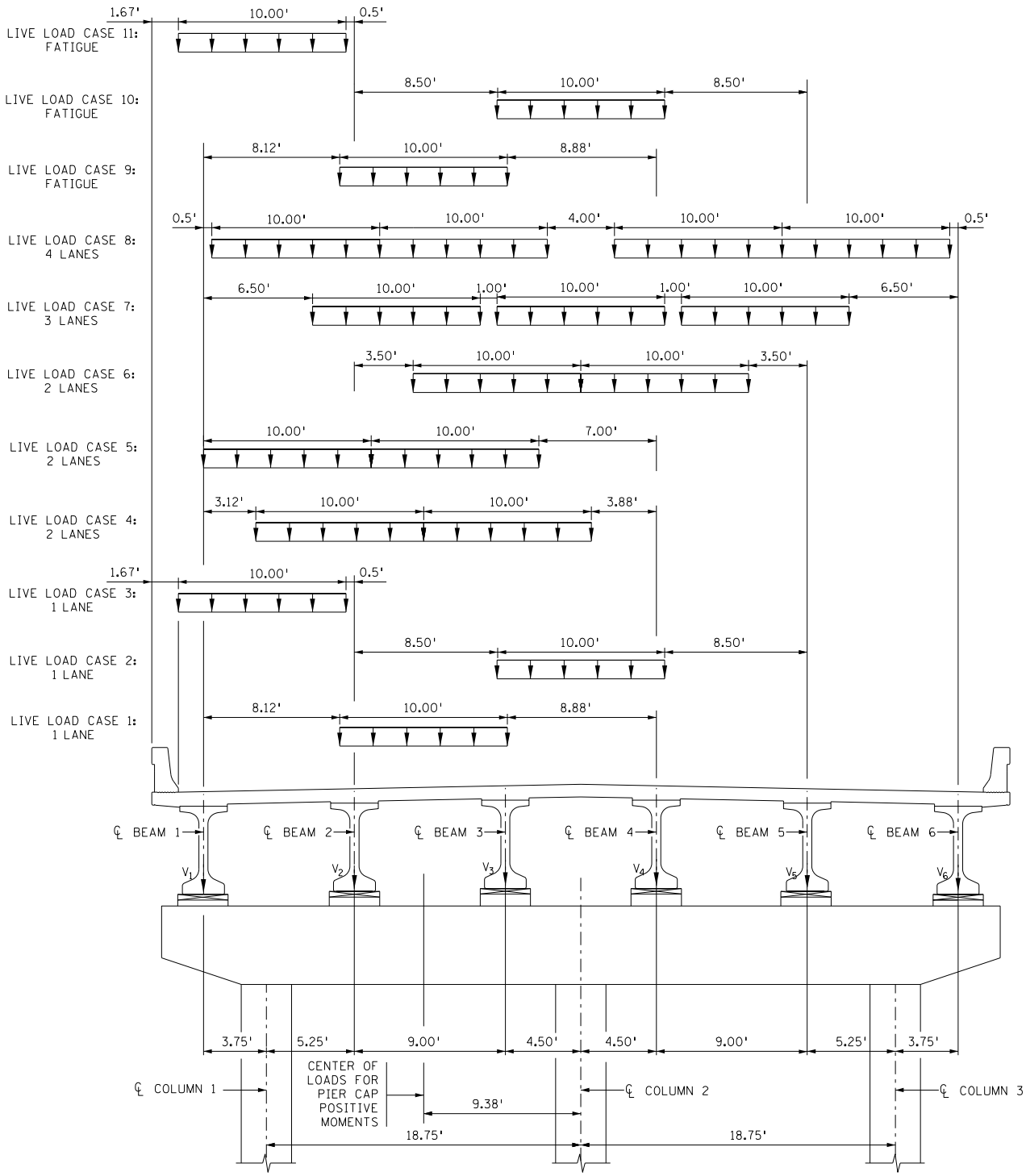

Figure 11.4.3.5

Table 11.4.3.7 - Superstructure Live Load Beam Reactions (kips)
(includes dynamic load allowance)

Live Load Case	Location	V1	V2	V3	V4	V5	V6
1	One Lane Positive Cap Moment	1.0	125.4	108.6	0.0	0.0	0.0
2	One Lane Over Center Column	0.0	0.3	117.2	117.2	0.3	0.0
3	One Lane At Gutter Line	143.6	94.3	0.0	0.0	0.0	0.0
4	Two Lanes At Cap Midspan Between Columns – Positive Cap Moment	37.6	165.8	160.0	28.5	0.0	0.0
5	Two Lanes Max Load to Beam 2 – Positive Cap Moment	88.2	176.4	123.0	4.4	0.0	0.0
6	Two Lanes Over Center Column	0.0	32.9	163.1	163.1	32.9	0.0
7	Three Lanes Over Center Column	5.8	108.6	134.6	134.6	108.6	5.8
8	Four Lanes	51.0	114.1	88.9	88.9	114.1	51.0
9	Fatigue-One Lane Positive Cap Moment	0.3	39.0	33.7	0.0	0.0	0.0
10	Fatigue–One Lane Over Center Column	0.0	0.1	36.4	36.4	0.1	0.0
11	Fatigue – One lane At Gutter Line	44.6	29.3	0.0	0.0	0.0	0.0

Braking Force

For this example, 4 design lanes will fit on the bridge, but it is assumed the bridge will at most see 2 lanes loaded in one direction for braking in the future. The 2 lanes of traffic are assumed to transmit a longitudinal (perpendicular to the pier) force that is evenly distributed to the six bearings and three columns.

[3.6.4] Begin by determining if a truck by itself or if truck plus lane loading governs the braking force.

Truck alone:

$0.25 \cdot (8 + 32 + 32) = 18.0$ kips <u>GOVERNS</u>

Truck plus lane:

$0.05 \cdot [8 + 32 + 32 + (2 \cdot 130 \cdot 0.64)] = 11.9$ kips

Then the design force is:

$$BR = 18.0 \cdot (\#\text{ of lanes in one direction}) \cdot (\text{multiple presence factor})$$

$$= 18.0 \cdot 2 \cdot 1.0 = 36.0 \text{ kips}$$

Although the lateral braking force is to be applied 6 feet above the top of deck, it gets transferred to the pier through the bearings. For a description of how the load is applied to the analysis model, see Article 11.4.3C in this example. In order to satisfy statics and make the two

load systems equivalent, transfer of the lateral force down to the bearing level requires the addition of a moment couple equal to:

$$L_{BR} \cdot [6\text{ ft} + (\text{distance from top of deck to bearings})]$$

Figure 11.4.3.6 illustrates this. The moment couple consists of vertical forces at the abutments. Because the distance from abutment to abutment is very large relative to the transfer height, the vertical forces are negligible and will be ignored. Therefore, we can conclude that for pier analysis, the braking force can be applied at the top of the pier. Also, the bearings allow for rotation due to longitudinally applied loads. This prevents the moment from transferring to the pier even when the load is applied above the top of the pier.

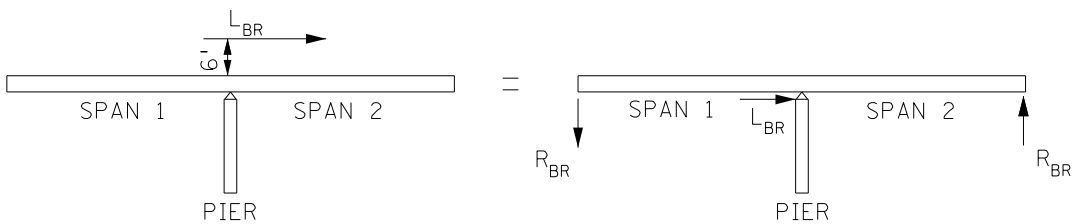

Figure 11.4.3.6
Equivalent Load Systems

Height of load application y_{BR} above the top of footing is:

y_{BR} = 26.75 – 4.50 = 22.25 ft

The moment at the base of the columns is:

$$M_{perpBR} = 36.0 \cdot 22.25 \cdot \left(\frac{1}{3}\right) = 267.0 \text{ kip} - \text{ft/column}$$

The lateral load on each bearing is:

$$L_{BR} = 36.0 \cdot \left(\frac{1}{6}\right) = 6.0 \text{ kip/bearing}$$

[3.8.1.2.3] **Wind Loads**

Wind loads consist of the transverse and longitudinal wind load components transmitted by the superstructure to the substructure and the wind load applied directly to the substructure. The wind load is applied for various angles of wind direction and is taken as the product of the skew coefficients, the calculated wind pressure, and the depth of the bridge. For this design example, wind loads are determined for the

Strength III and Strength V load combinations; however, calculations are only shown for Strength III.

The wind pressure for Strength III is determined as:

[3.8.1.2.1]

$$P_{zIII} = 2.56 \cdot 10^{-6} \cdot V^2 \cdot K_z \cdot G \cdot C_D$$

The design 3-second gust wind speed is determined using Figure 3.8.1.1.2-1 as V= 115 mph.

Wind exposure category C is assumed for the structure and, with a superstructure height <33 ft, the pressure exposure and elevation coefficient, K_Z, is taken as 1.0.

[Table C3.8.1.2.1-1]

[Table 3.8.1.2.1-1]
[Table 3.8.1.2.1-2]

The gust effect factor, G, is taken as 1.0. The drag coefficient, C_D, is:

- 1.3 for wind on the superstructure
- 1.6 for wind on the substructure

Therefore, the wind pressure for Strength III with wind exposure category C is:

$P_{zsupIII} = 2.56 \cdot 10^{-6} \cdot 115^2 \cdot 1.0 \cdot 1.0 \cdot 1.3 = 0.044$ ksf on superstructure

$P_{zsubIII} = 2.56 \cdot 10^{-6} \cdot 115^2 \cdot 1.0 \cdot 1.0 \cdot 1.6 = 0.054$ ksf on substructure

The wind pressure on the structure for Strength V is based on a design 3-second gust wind speed V = 80 mph, and is taken as:

[Table C3.8.1.2.1-2]

$P_{zsupV} = 0.0163 \cdot C_D = 0.0163 \cdot 1.3 = 0.021$ ksf on superstructure

$P_{zsubV} = 0.0163 \cdot C_D = 0.0163 \cdot 1.6 = 0.026$ ksf on substructure

[3.8.1.2.3a]

Wind Load from the Superstructure

For the transverse wind load on the superstructure, the deck functions as a horizontal 2-span continuous beam with wind pressure acting on the exposed edge area of the superstructure. The reaction at the fixed end for a propped cantilever beam is $^5/_8$ of the uniformly applied load. Then for a 2-span continuous beam, $^5/_8$ of wind from both spans is carried by the pier.

Assuming a fixed bearing assembly height of 3.25 inches, the depth of exposure D_{wexp} is approximately:

D_{wexp} = barrier height + deck thickness + stool height
+ beam depth + bearing assembly height
+ exterior pedestal height – (cross-slope drop)
= 32.00 + 9.00 + 2.50 + 63.00 + 3.25 + 3.00 – (0.02 · 18.00)
= 112.39 in

Round up to 113” = 9’-5” = 9.42 ft

Then the tributary area for superstructure wind is:

$$A_{wsup} = 2 \cdot \left(\frac{5}{8}\right) \cdot 130 \cdot 9.42 = 1531 \text{ ft}^2$$

For the longitudinal wind load on the superstructure, the deck does not function in the same way. All of the longitudinal wind load could be applied to the pier. However, some of the load is taken at the abutments due to friction in the bearings. Therefore, 5/8 is considered a reasonable approximation of the longitudinal component applied to the pier.

The wind on superstructure load WS_{sup} is:

$$WS_{sup} = P_B \cdot A_{wsup}$$

$$\text{where } P_B = P_Z \cdot \text{Skew Coefficient}$$

The skew coefficients are taken from LRFD Table 3.8.1.2.3a-1 for various attack angles.

For example, for Strength III and a wind attack angle skewed 30 degrees to the superstructure:

$$P_{Btransv} = P_{Bpar} = 0.044 \cdot 0.82 = 0.036 \text{ ksf}$$

$$P_{Blong} = P_{Bperp} = 0.044 \cdot 0.24 = 0.011 \text{ ksf}$$

$$WS_{suppar} = 0.036 \cdot 1531 = 55.1 \text{ kips}$$

$$L_{par1} = L_{par2} = L_{par3} = L_{par4} = L_{par5} = L_{par6} = \frac{55.1}{6} = 9.2 \text{ kips}$$

$$WS_{supperp} = 0.011 \cdot 1531 = 16.8 \text{ kips}$$

The longitudinal and transverse wind components are applied at the mid-depth of the superstructure.

Similar to the braking force, the longitudinal wind component on the superstructure can be applied at the top of the pier for analysis. The height of application y_{perp} above the top of footing is:

$$y_{perp} = 26.75 - 4.50 = 22.25 \text{ ft}$$

Then, for a wind attack angle skewed 30 degrees to the superstructure, the moment at the base of the columns is:

$$M_{wsupperp} = 16.8 \cdot 22.25 \cdot \left(\frac{1}{3}\right) = 124.6 \text{ kip} - \text{ft/column}$$

Because the bearings do not rotate due to transverse loads, the moment does not dissipate at the bearings and needs to be applied to the pier. For the analysis model, the transverse wind component will be applied at the centroid of the pier cap. Transfer of the transverse wind component from the centroid of the exposed superstructure area to the centroid of the pier cap requires the addition of vertical loads at the bearings equivalent to the reduction in moment M_{red}. For a wind attack angle skewed 30 degrees:

$$M_{red} = WS_{suppar} \cdot (\text{distance from superstructure centroid to pier cap centroid})$$

$$= 55.1 \cdot \left(\frac{9.42}{2} + \frac{4.67}{2}\right) = 388.2 \text{ kip} - \text{ft}$$

The additional vertical loads are calculated assuming the moment is applied at the center of the bridge and the deck is rigid. The "I" of the beams is determined and vertical loads "V" are based on the formula:

$$V = \frac{M_{red}\, x_{beam}}{I_{beams}}$$

where x_{beam} = distance from center of bridge to centerline of beam
and $I_{beams} = \Sigma x_{beam}^2$

Then for Beam 1 (left fascia beam with vertical load V_1) and a wind attack angle skewed 30 degrees:

$$x_{beam1} = 22.5 \text{ ft}$$

$$I_{beams} = \Sigma x^2 = (22.5)^2 + (13.5)^2 + (4.5)^2 + (-4.5)^2 + (-13.5)^2 + (-22.5)^2$$

$$= 1417.5 \text{ ft}^2$$

$$V_1 = \frac{388.2 \cdot (22.5)}{1417.5} = 6.2 \text{ kips}$$

For Strength III, the wind on superstructure loads applied to the pier are summarized in Table 11.4.3.8.

Table 11.4.3.8 – Wind Load from Superstructure (Strength III)

Wind Attack Angle	L_{par1} V_1 (kips)	L_{par2} V_2 (kips)	L_{par3} V_3 (kips)	L_{par4} V_4 (kips)	L_{par5} V_5 (kips)	L_{par6} V_6 (kips)	$M_{wsupperp}$ (kip-ft/col)
0 Degree Skew	11.2 7.5	11.2 4.5	11.2 1.5	11.2 -1.5	11.2 -4.5	11.2 -7.5	0.0
15 Degree Skew	10.0 6.7	10.0 4.0	10.0 1.3	10.0 -1.3	10.0 -4.0	10.0 -6.7	57.1
30 Degree Skew	9.2 6.2	9.2 3.7	9.2 1.2	9.2 -1.2	9.2 -3.7	9.2 -6.2	124.6
45 Degree Skew	7.4 5.0	7.4 3.0	7.4 1.0	7.4 -1.0	7.4 -3.0	7.4 -5.0	158.7
60 Degree Skew	3.8 2.6	3.8 1.5	3.8 0.5	3.8 -0.5	3.8 -1.5	3.8 -2.6	192.8

[3.8.2] **Vertical Wind Load**

An additional wind on superstructure load is considered for the case where there is no live load and the wind is oriented at 0 degrees. The load represents uplift on the bottom of the deck and is called the vertical wind on superstructure load. The vertical wind load case is applied to Strength III only. The deck was assumed hinged over the pier for this load case. A tributary length of 130 feet (2 · 0.5 · 130 feet) was used with the deck width of 51.33 feet. A 0.020 ksf pressure produces a vertical force of:

Vertical force:

$$WS_V = 51.33 \cdot -0.020 \cdot 130 = -133.5 \text{ kips}$$

Eccentricity of vertical force:

$$e_{wsv} = -\left(\frac{51.33}{4}\right) = -12.83 \text{ ft}$$

Overturning Moment:

$$M_{wsv} = -133.5 \cdot (-12.83) = 1713 \text{ k-ft}$$

The vertical force applied to the pier at each bearing location can be calculated using the formula:

$$V = \frac{WS_v}{N} + \frac{M_{wsv} x_{beam}}{I_{beams}}$$

where N = number of beams

For example, at the bearing location for Beam 1 (left fascia beam with vertical load V_1):

$$V_1 = \frac{-133.5}{6} + \frac{1713\,(22.5)}{1417.5} = 4.9 \text{ kips}$$

Table 11.4.3.9 summarizes the vertical wind on superstructure loads.

Table 11.4.3.9 – Vertical Wind on Superstructure Loads (kips)

Wind Attack Angle	V1	V2	V3	V4	V5	V6
0 Degree Skew	4.9	-5.9	-16.8	-27.7	-38.6	-49.4

[3.8.1.2.3b]

Wind Load Applied Directly to the Substructure

A wind load with the base wind pressures previously calculated for the Strength III and Strength V load combinations are resolved into components for different wind attack angles and applied directly to the pier. The resulting wind loads for Strength III are shown in Table 11.4.3.10. This wind load was applied as line loads to the pier cap and column members in the structural analysis model. Assuming 1 foot of cover over the tops of the footings, the projected area of the perpendicular face of the cap is 15.6 ft^2 and of the three columns is 49.7 ft^2. The parallel face has an area of 229.4 ft^2 for the pier cap and 149.2 ft^2 for the columns.

Table 11.4.3.10 – Wind Load on Substructure (Strength III)

Wind Attack Angle	Pressure on Perpendicular Face (ksf)	Pressure on Parallel Face (ksf)
0 Degree Skew	0.054	0.000
15 Degree Skew	0.052	0.014
30 Degree Skew	0.047	0.027
45 Degree Skew	0.038	0.038
60 Degree Skew	0.027	0.047

[3.8.1.3]

Wind on Live Load

The wind on live load is the product of the base wind pressure and the tributary length which are the same for all applicable load combinations. The wind on live load was assumed to have the same tributary length as the superstructure wind load. It is applied at 6 feet above the top of the deck.

Tributary length for wind on live load:

$$L_{trib} = 2 \cdot 130 \cdot \frac{5}{8} = 162.5 \text{ ft}$$

The wind on live load WL is:

$$WL = P_B \cdot L_{trib}$$

where P_B = base wind pressure from LRFD Table 3.8.1.3-1 for various wind attack angles.

For example, for a wind attack angle skewed 30 degrees to the superstructure:

$$P_{Btransv} = P_{Bpar} = 0.082 \text{ klf}$$

$$P_{Blong} = P_{Bperp} = 0.024 \text{ klf}$$

$$WL_{par} = 0.082 \cdot 162.5 = 13.3 \text{ kips}$$

Then the lateral load L applied to the pier cap at each beam location is:

$$L_{par1} = L_{par2} = L_{par3} = L_{par4} = L_{par5} = L_{par6} = \frac{13.3}{6} = 2.2 \text{ kips}$$

$$WL_{perp} = 0.024 \cdot 162.5 = 3.9 \text{ kips}$$

Similar to the superstructure wind load, the longitudinal wind on live load component can be applied at the top of the pier for analysis. The height of application y_{perp} above the top of footing is:

y_{perp} = 26.75 – 4.50 = 22.25 ft

Then for a wind attack angle skewed 30 degrees to the superstructure, the moment at the base of the columns is:

$$M_{WLperp} = 3.9 \cdot 22.25 \cdot \left(\frac{1}{3}\right) = 28.9 \text{ kip} - \text{ft/column}$$

Again, similar to the wind on superstructure load, the transverse wind on live load component will be applied at the centroid of the pier cap. This will require the addition of vertical loads at the bearings equivalent to the reduction in moment. For a wind attack angle skewed 30 degrees:

$$M_{red} = WL_{par} \cdot (6 \text{ ft} + \text{dist. from top of deck to pier cap centroid})$$

$$= 13.3 \cdot \left(6.00 + (9.42 - 2.67) + \frac{4.67}{2}\right) = 200.6 \text{ kip} - \text{ft}$$

Then for Beam 1 (left fascia beam with vertical load V_1) and a wind attack angle skewed 30 degrees:

$$V_1 = \frac{M_{red} \cdot x_{beam}}{I_{beams}} = \frac{200.6 \cdot (22.5)}{1417.5} = 3.2 \text{ kips}$$

The wind on live load values are summarized in Table 11.4.3.11.

Table 11.4.3.11 – Wind on Live Load

Wind Attack Angle	L_{par1} V_1 (kips)	L_{par2} V_2 (kips)	L_{par3} V_3 (kips)	L_{par4} V_4 (kips)	L_{par5} V_5 (kips)	L_{par6} V_6 (kips)	M_{WLperp} (kip-ft/col)
0 Degree Skew	2.7 3.9	2.7 2.3	2.7 0.8	2.7 -0.8	2.7 -2.3	2.7 -3.9	0.0
15 Degree Skew	2.4 3.4	2.4 2.1	2.4 0.7	2.4 -0.7	2.4 -2.1	2.4 -3.4	14.8
30 Degree Skew	2.2 3.2	2.2 1.9	2.2 0.6	2.2 -0.6	2.2 -1.9	2.2 -3.2	28.9
45 Degree Skew	1.8 2.6	1.8 1.5	1.8 0.5	1.8 -0.5	1.8 -1.5	1.8 -2.6	38.6
60 Degree Skew	0.9 1.3	0.9 0.8	0.9 0.3	0.9 -0.3	0.9 -0.8	0.9 -1.3	46.0

C. Structural Analysis

To determine the design forces in different portions of the pier a structural analysis was performed with a matrix analysis program. Gross section properties were used for all members. Fixed supports were provided at the top of each footing for column and cap design. Fixed supports were provided at the top of the piles for footing design.

The matrix analysis program was constructed using a beam-and-node model. The member representing the cap was set at the centroid of the cap. The longitudinal loads applied to the pier at the top of the cap were assumed to apply no moment to the pier due to bearing rotation and the force couple applied at the adjacent supports. However, this reduces the distance from the location of point loads to the support. A moment was added to account for this decrease in height. The value of the moment is equal to the force times the distance from the top of the cap to the centroid of the cap.

D. Pier Cap Design

1. Design Loads

The pier cap is designed for dead, live, and thermal loads. The braking load was assumed not to contribute to maximum vertical load effects for the design of the pier cap.

Wind loads can be neglected in the cap design. In load combinations with wind loading, the live load factor is reduced significantly. The additional vertical load from wind will not exceed the reduction in live load. Wind, wind on live load, and braking loads produce lateral loads on the pier cap that require calculation of Strength III and Strength V load combinations to determine the maximum moment and shear. In this example, these loads are very small and by inspection do not govern. For long spans between columns, deep caps, or thin caps, consider checking lateral loads to determine if skin and shear reinforcing are adequate for resistance.

Three load combinations are examined for design of the pier cap:

- Strength I is used to determine basic flexural and shear demands:

  $$U_1 = 1.25 \cdot DC + 1.75 \cdot (LL + IM) + 0.50 \cdot TU$$

- Service I is used to check the distribution of flexural reinforcement (crack control):

  $$S_1 = 1.00 \cdot DC + 1.00 \cdot (LL + IM) + 1.00 \cdot TU$$

- Fatigue I is used to ensure that adequate fatigue resistance is provided for an infinite life cycle:

  $$F = 1.50 \cdot (LL + IM)$$

The pier cap design forces are listed in Tables 11.4.3.12 and 11.4.3.13.

For simplicity, negative bending moments are given at the column centerline. Another reasonable approach would be to use the average of the moments at the column centerline and the column face for the design negative moment.

Again for simplicity, pier cap shears at the columns are given at the column centerline. For pier configurations where beam reactions are located over a column, the design shear should be taken at the column face.

Table 11.4.3.12 – Pier Cap Design Moments

Load Combination	Positive Bending Moment (located at CL Beam 2) (kip·ft)	Negative Bending Moment (located at CL Column 1) (kip·ft)
Strength I	1618 (LL Case 4)	2356 (LL Case 3, left of CL)
Service I	1117 (LL Case 4)	1732 (LL Case 3, right of CL)
Fatigue I (max)	226 (LL Case 9)	251 (LL Case 11, left of CL)
Fatigue I (min)	-8 (LL Case 11)	0
Permanent Loads (unfactored)	470	1131 (left of CL) 1141 (right of CL)

Table 11.4.3.13 – Pier Cap Design Shears (kips)

Load Combination	Location Along Pier Cap				
	CL Beam 1	CL Column 1	CL Beam 2	CL Beam 3	CL Column 2
Strength I	619 (LL Case 3)	675 (LL Case 5)	660 (LL Case 5)	720 (LL Case 4)	733 (LL Case 4)
Permanent Loads (unfactored)	294	313	301	326	337

2. Design Pier Cap Reinforcement for Bending Moment

The flexural design of the cap is accomplished with four checks: flexural strength, crack control, fatigue, and minimum reinforcement. An appropriate level of reinforcement to satisfy the flexural force demand is computed first.

[5.7.3.2] **Flexural Resistance**

Assume a rectangular stress distribution and solve for the required area of reinforcing based on M_u and d. For an f'_c of 4.0 ksi and a β_1 of 0.85 the equation for the required area of steel reduces to:

$$M_u = \phi \cdot M_n = \phi \cdot As \cdot fy \cdot \left[d - \frac{a}{2}\right]$$

$$a = \frac{A_s \cdot f_y}{0.85 \cdot f'_c \cdot b}$$

$$M_u = \phi \cdot A_s \cdot f_y \cdot \left[d - \frac{A_s \cdot f_y}{1.7 \cdot f'_c \cdot b}\right]$$

$$M_u = 0.90 \cdot A_s \cdot (60) \cdot \left[d - \frac{A_s \cdot 60}{1.7 \cdot 4 \cdot 40}\right] \cdot \left[\frac{1}{12}\right]$$

$$0.993 \cdot A_s^2 - 4.5 \cdot d \cdot A_s + M_u = 0$$

$$A_s = \frac{4.5 \cdot d - \sqrt{20.25 \cdot d^2 - 3.972 \cdot M_u}}{1.986}$$

[5.10.3.1.3] Compute "d" values for both a single layer of reinforcement (for positive moment) and a double layer of reinforcement (for negative moment). Assume the stirrups are #5 bars, the primary reinforcement is #9 bars, the clear cover is 2", and the clear dimension between layers is 1.128" (which is the diameter of a #9 bar that can be used as a spacer between the 2 layers).

The "d" for a single layer of reinforcement is:

$$d = 56 - 2 - 0.625 - \frac{1.128}{2} = 52.81 \text{ in}$$

The assumed "d" for two layers of reinforcement is:

$$d = 56 - 2 - 0.625 - 1.128 - \frac{1.128}{2} = 51.68 \text{ in}$$

Using the Strength I design forces and assuming one layer of reinforcement for the positive moment steel and two layers of reinforcement for the negative steel, the required areas of steel can be found. They are presented in Table 11.4.3.14 along with trial reinforcement.

Table 11.4.3.14 – Trial Longitudinal Reinforcement

Location	M_u(kip-ft)	d	A_{sreq} (in^2)	Trial Bars	A_{sprov} (in^2)
Positive Moment	1618	52.81	7.01	7-#9	7.00
Negative Moment	2356	51.68	10.57	14-#8	11.06

[5.5.4.2.1-2] Verify the assumption that ϕ = 0.90.

For the positive moment reinforcement:

$$c = \frac{A_s \cdot f_y}{0.85 \cdot f'_c \cdot \beta_1 \cdot b} = \frac{7.00 \cdot 60}{0.85 \cdot 4 \cdot 0.85 \cdot 40} = 3.63 \text{ in.}$$

[5.7.2.1] Concrete compression strain limit $\varepsilon_c = 0.003$

[Table C5.7.2.1-1] Reinforcement tension-controlled strain limit $\varepsilon_{tl} = 0.005$

$$\varepsilon_t = (d - c)\left(\frac{\varepsilon_c}{c}\right) = (52.81 - 3.63)\left(\frac{0.003}{3.63}\right) = 0.041 > \varepsilon_{tl} = 0.005$$

Therefore, the initial assumption of ϕ = 0.90 is OK.

For the negative moment reinforcement:

$$c = \frac{A_s \cdot f_y}{0.85 \cdot f'_c \cdot \beta_1 \cdot b} = \frac{11.06 \cdot 60}{0.85 \cdot 4 \cdot 0.85 \cdot 40} = 5.74 \text{ in.}$$

[5.7.2.1] Since #8 bars were chosen for negative moment rather than the originally assumed #9, the depth "d" will have to be recalculated.

$$d = 56 - 2 - 0.625 - 1.00 - \frac{1.00}{2} = 51.88$$

Concrete compression strain limit $\varepsilon_c = 0.003$

[Table C5.7.2.1-1] Reinforcement tension-controlled strain limit $\varepsilon_{tl} = 0.005$

$$\varepsilon_t = (d - c)\left(\frac{\varepsilon_c}{c}\right) = (51.88 - 5.74)\left(\frac{0.003}{5.74}\right) = 0.024 > \varepsilon_{tl} = 0.005$$

Therefore, the initial assumption of ϕ = 0.90 is OK.

[5.7.3.4] **Positive Moment Crack Control**

To ensure that cracking is limited to small cracks that are well distributed, a limit is placed on the spacing and service load stress of the reinforcing steel.

The stress in the reinforcement is found using a cracked section analysis with the trial reinforcement. To simplify the calculations, the section is assumed to be singly reinforced.

[5.4.2.4 & 5.7.1]

$$n = \frac{E_s}{E_c} = \frac{29{,}000}{33{,}000 \cdot (0.145)^{1.5} \cdot \sqrt{4.0}} = 7.96 \qquad \underline{\text{Use n=8}}$$

$$n \cdot A_s = 8 \cdot (7.00) = 56.00 \text{ in}^2$$

Referring to Figure 11.4.3.7, determine the location of the neutral axis:

$$b \cdot x \cdot \frac{x}{2} = n \cdot A_s \cdot (d - x)$$

$$\frac{(40) \cdot x^2}{2} = 56.00 \cdot (52.81 - x) \qquad \text{solving, } x = 10.84 \text{ in}$$

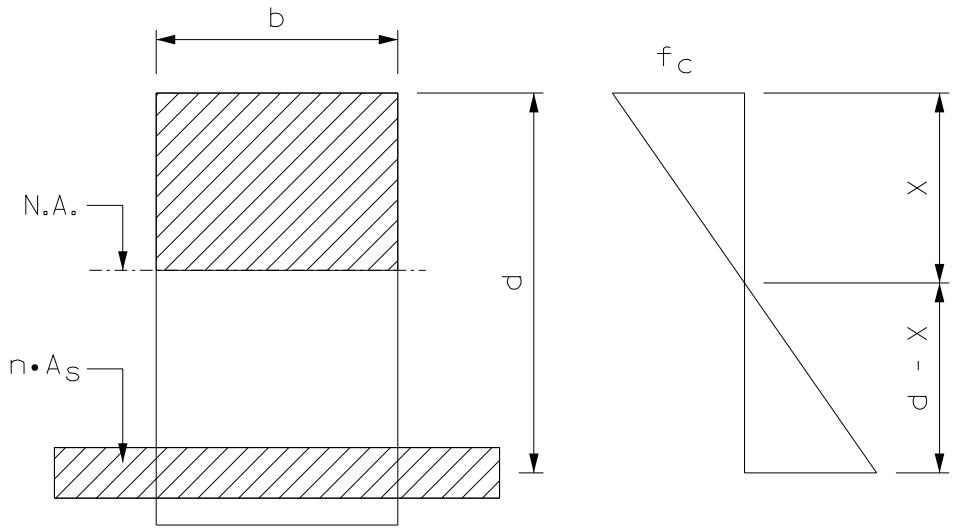

Figure 11.4.3.7
Cracked Section Diagram

Determine the lever arm between service load flexural force components.

$$j \cdot d = d - \frac{x}{3} = 52.81 - \frac{10.84}{3} = 49.20 \text{ in}$$

Compute the stress in the reinforcement.

Actual $f_{ss} = \dfrac{M}{A_s \cdot j \cdot d} = \dfrac{1117 \cdot 12}{7.00 \cdot (49.20)} = 38.9 \text{ ksi}$

Max allowable $f_{ss} = 0.6 \cdot f_y = 36.0$ ksi < 38.9 ksi <u>NO GOOD</u>

Increase the amount of steel by the ratio of the stresses:

$$A_s = \frac{38.9}{36.0} \cdot 7.00 = 7.56 \text{ in}^2$$

Try 8 - #9 bars, $A_s = 8.00 \text{ in}^2$

Then:

$n \cdot A_s = 64.00 \text{ in}^2$
d = 52.81 in
x = 11.50 in
jd = 48.98 in

Actual f_{ss} = 34.2 ksi < 36.0 ksi <u>OK</u>

Pier caps are designed using Class 2 exposure conditions, so $\gamma_e = 0.75$.

d_c =clear cover + diameter of #5 stirrup + ½ diameter of #9 bar
=2 + 0.625 + 1.128/2 = 3.19 in

$$\beta_s = 1 + \frac{d_c}{0.7 \cdot (h - d_c)} = 1 + \frac{3.19}{0.7 \cdot (56 - 3.19)} = 1.09$$

LRFD Equation 5.7.3.4-1 defines the maximum bar spacing permitted:

$$s_{max} = \frac{700 \cdot \gamma_e}{\beta_s \cdot f_{ss}} - 2 \cdot d_c = \frac{700 \cdot 0.75}{1.09 \cdot 34.2} - 2 \cdot 3.19 = 7.70 \text{ in}$$

For 8 - #9 bars, actual bar spacing s is:

$$s = \frac{\text{pier cap width} - 2 \cdot \text{distance to center of bar}}{\text{Number of spaces}}$$

$$s = \frac{40 - 2 \cdot (2 + 0.625 + 0.5 \cdot 1.128)}{7} = 4.80 \text{ in} < 7.70 \text{ in} \qquad \underline{\text{OK}}$$

Positive Moment Fatigue

[5.5.3] The stress range in the reinforcement is computed and compared against limits to ensure that adequate fatigue resistance is provided.

The unfactored dead load moment in the positive moment region is 470 kip-ft.

The extreme moments on the cross section when fatigue loading is applied are:

Maximum moment = 470 + 226 = 696 k-ft
Minimum moment = 470 + (-8) = 462 k-ft

Plugging these moments into the equation used to compute the stress in the reinforcement for crack control results in:
For the maximum moment:

$$f_{max} = \frac{M}{A_s \cdot j \cdot d} = \frac{696 \cdot 12}{8.00 \cdot (48.98)} = 21.3 \text{ ksi}$$

For the minimum moment:

$$f_{min} = \frac{M}{A_s \cdot j \cdot d} = \frac{462 \cdot 12}{8.00 \cdot (48.98)} = 14.1 \text{ ksi}$$

The stress range in the reinforcement (f_f) is the difference between the two stresses

$$f_f = (21.3 - 14.1) = 7.2 \text{ ksi}$$

[5.5.3.2] The maximum stress range permitted is based on the minimum stress in the bar and the deformation pattern of the reinforcement.

$$f_{f(max)} = 24 - \frac{20}{f_y} \cdot f_{min} = 24 - \frac{20}{60} \cdot (14.1)$$

$$f_{f(max)} = 19.3 \text{ ksi} > 7.2 \text{ ksi}$$ OK

Check Minimum Reinforcement for Positive Moment

[5.7.3.3.2] To prevent a brittle failure mode, adequate flexural reinforcement needs to be placed in the cross section. The modulus of rupture for normal weight concrete (λ = 1.0) is:

[5.4.2.6]

$$f_r = 0.24 \cdot \lambda \cdot \sqrt{f'c} = 0.24 \cdot 1.0 \cdot \sqrt{4} = 0.48 \text{ ksi}$$

The gross moment of inertia is:

$$I_g = \frac{1}{12} \cdot b \cdot t^3 = \frac{1}{12} \cdot 40 \cdot (56)^3 = 585{,}387 \text{ in}^4$$

The distance from the centroid to the tension face is:

$$y_t = 56/2 = 28.0 \text{ in}$$

Take $\gamma_1 = 1.60$, $\gamma_3 = 0.67$, for ASTM A615 Grade 60 reinforcement.

Combining these terms to determine the cracking moment produces:

$$M_{cr} = \gamma_1 \cdot \gamma_3 \cdot \frac{f_r \cdot I_g}{y_t} = 1.6 \cdot 0.67 \cdot \frac{0.48 \cdot 585{,}387}{28.0 \cdot (12)} = 896.5 \text{ kip-ft}$$

The capacity of the steel provided is:

$$M_r = \phi A_s f_y (d - a/2)$$

$$= 0.9 \cdot (8.00) \cdot (60) \cdot \left[52.81 - \left(\frac{8.00 \cdot 60}{2 \cdot 0.85 \cdot 4 \cdot 40}\right)\right] \cdot \frac{1}{12}$$

$$= 1837.6 \text{ kip-ft} > 896.5 \text{ kip-ft}$$ OK

Provide 1 layer of 8 - #9 bars for positive reinforcement.

[5.7.3.4] **Negative Moment Crack Control**

The stress in the reinforcement is found using a cracked section analysis with the trial reinforcement.

For 2 layers of 7-#8 bars (A_s = 11.06 in^2) with a clear spacing between layers equal to 1.0 inch,

[5.10.3.1.3]

$$d = 56 - 2 - 0.625 - 1.00 - \frac{1.0}{2} = 51.88 \text{ in}$$

The transformed area of steel is:

$n \cdot A_s = 8 \cdot (11.06) = 88.48 \text{ in}^2$

The location of the neutral axis satisfies:

$$\frac{(40) \cdot x^2}{2} = 88.48 \cdot (51.88 - x) \qquad \text{solving, } x = 13.1 \text{ in}$$

The lever arm between service load flexural force components is:

$$j \cdot d = d - \frac{x}{3} = 51.88 - \frac{13.1}{3} = 47.51 \text{ in}$$

And the stress in the reinforcement is:

$$\text{Actual} \quad f_{ss} = \frac{M}{A_s \cdot j \cdot d} = \frac{1732 \cdot 12}{11.06 \cdot (47.51)} = 39.6 \text{ ksi}$$

Max allowable $f_{ss} = 0.6 \cdot f_y = 36.0$ ksi < 39.6 ksi <u>NO GOOD</u>

Increase the amount of steel by the ratio of the stresses:

$$A_s = \frac{39.6}{36.0} \cdot 11.06 = 12.17 \text{ in}^2$$

Try 2 layers of 8 - #8 bars, $A_s = 12.64 \text{ in}^2$

Then:

$n \cdot A_s = 101.12 \text{ in}^2$

d = 51.88 in

x = 13.86 in

jd = 47.26 in

Actual f_{ss} = 34.8 ksi < 36.0 ksi <u>OK</u>

For $\gamma_e = 0.75$ and $d_C = 3.13$ in (2" cover + 5/8" stirrup + ½ of #8 bar),

$$\beta_s = 1 + \frac{d_C}{0.7 \cdot (h - d_C)} = 1 + \frac{3.13}{0.7 \cdot (56 - 3.13)} = 1.08$$

The maximum spacing permitted of reinforcement is:

$$s_{max} = \frac{700 \cdot \gamma_e}{\beta_s \cdot f_{ss}} - 2 \cdot d_C = \frac{700 \cdot 0.75}{1.08 \cdot 34.8} - 2 \cdot 3.13 = 7.71 \text{ in}$$

For equal bar spacing, s = 4.82 in < 7.71 in <u>OK</u>

[5.5.3]

Negative Moment Fatigue

The moments on the negative moment section when fatigue loading is applied vary from:

Maximum moment = 1131 + 251 = 1382 k-ft

Minimum moment = 1131 + 0 = 1131 k-ft

Plugging these moments into the equation used to compute the stress in the reinforcement for crack control results in:

For the maximum moment:

$$f_{max} = \frac{M}{A_s \cdot j \cdot d} = \frac{1382 \cdot 12}{12.64 \cdot (47.26)} = 27.8 \text{ ksi}$$

For the minimum moment:

$$f_{min} = \frac{M}{A_s \cdot j \cdot d} = \frac{1131 \cdot 12}{12.64 \cdot (47.26)} = 22.7 \text{ ksi}$$

The stress range in the reinforcement (f_f) is the difference between the two stresses

$$f_f = (27.8 - 22.7) = 5.1 \text{ ksi}$$

[5.5.3.2]

The maximum stress range permitted is based on the minimum stress in the bar and the deformation pattern of the reinforcement.

$$f_{f(max)} = 24 - \frac{20}{f_y} \cdot f_{min} = 24 - \frac{20}{60} \cdot (22.7)$$

$$f_{f(max)} = 16.4 > 5.1 \text{ ksi}$$ <u>OK</u>

[5.7.3.3.2]

Check Minimum Reinforcement for Negative Moment

The compression block depth is:

$$a = \frac{A_s \cdot f_y}{0.85 \cdot f'_c \cdot b} = \frac{12.64 \cdot 60}{0.85 \cdot 4 \cdot 40} = 5.58 \text{ in.}$$

The moment capacity provided is:

$$M_r = \phi A_s f_y (d - a/2)$$

$$= 0.9 \cdot (12.64) \cdot (60) \cdot \left[51.88 - \left(\frac{5.58}{2}\right)\right] \cdot \frac{1}{12}$$

$$= 2792.2 \text{ kip-ft} > 896.5 \text{ kip-ft}$$ <u>OK</u>

Provide 2 layers of 8-#8 bars (A_s = 12.64 in^2) for negative moment reinforcement.

3. Design Shear Reinforcement

The maximum factored design shear force is 733 kips (Strength I for Live Load Case 4) and occurs at the centerline of Column 2.

Min. required $V_n = \frac{V_u}{\varphi_v} = \frac{733}{0.90} = 814$ kips

The shear design for reinforced concrete elements is a two-step process. First, the shear capacity of the concrete section is determined. Second, the amount of shear steel is determined. The concrete capacity is dependent on θ, the angle of inclination of the concrete struts, and β, a factor indicating the ability of the diagonally cracked concrete to transmit tension.

[5.8.3.4.1] **Determine Concrete Shear Capacity**

The minimum shear reinforcement will be provided in the section.

Therefore, β = 2.0 and θ = 45 degrees

d_v is the distance between the internal flexural force components. The smaller distance between the "C" and "T" centroids is for the negative moment steel:

$$d_v = d - \frac{a}{2} = 51.88 - \frac{5.58}{2} = 49.1 \text{ in}$$

[5.8.2.9] However, d_v need not be less than:

$$0.72 \cdot h = 0.72 \cdot 56 = 40.32 \text{ in}$$

or

$$0.90 \cdot d = 0.90 \cdot 51.88 = 46.69 \text{ in}$$

Use d_v = 49.1 in

[5.4.2.8] The concrete density modification factor, λ, for normal-weight concrete ($W_c \geq 135$ pcf), is 1.0.

With d_v known, the concrete shear capacity can be computed:

[5.8.3.3-3] $$V_c = 0.0316 \cdot \beta \cdot \lambda \cdot \sqrt{f'_c} \cdot b_v \cdot d_v = 0.0316 \cdot 2 \cdot 1 \cdot \sqrt{4} \cdot 40 \cdot 49.1 = 248 \text{ kips}$$

Determine Stirrup Spacing

The difference between the required shear capacity and the capacity provided by the concrete is the required capacity for the shear steel.

Min. required $V_s = (\text{Min. reqd. } V_n) - V_c = 814 - 248 = 566$ kips

Use #5 double "U" stirrups that will be vertical. Four legs of #5 bars have an area of:

$$A_v = 4 \cdot A_b = 4 \cdot 0.31 = 1.24 \text{ in}^2$$

[5.8.3.3-4] The capacity of shear steel is:

$$V_s = \frac{\left[A_v \cdot f_y \cdot d_v \cdot \cot(\theta)\right]}{s}$$

This can be rearranged to solve for the stirrup spacing:

$$s \le \frac{[A_v \cdot f_y \cdot d_v \cdot \cot(\theta)]}{V_s} = \frac{\left[1.24 \cdot 60 \cdot 49.1 \cdot \cot(45)\right]}{566} = 6.45 \text{ in}$$

To simplify construction, try a constant stirrup spacing of 6.0 inches between columns and in pier cap cantilever.

[5.8.2.5] **Check Minimum Shear Reinforcement Requirements**

Determine maximum stirrup spacing that satisfies minimum transverse reinforcement requirements:

$$A_v \ge 0.0316 \cdot \lambda \cdot \sqrt{f_c'} \cdot \frac{b_v \cdot s}{f_y}$$

Rearranging and solving for stirrup spacing s,

$$s \le \frac{A_v \cdot f_y}{0.0316 \cdot \lambda \cdot b_v \cdot \sqrt{f_c'}} = \frac{1.24 \cdot 60}{0.0316 \cdot 1 \cdot 40 \cdot \sqrt{4}} = 29.4 \text{ in} >> 6 \text{ in} \quad \underline{\text{OK}}$$

[5.8.2.7] **Check Maximum Shear Reinforcement Spacing Requirements**

First determine if $v_u < 0.125 \cdot f_c'$:

[5.8.2.9]

$$0.125 f_c' = 0.125 \cdot 4 = 0.50 \text{ ksi}$$

$$v_u = \frac{V_u - \varphi V_p}{\varphi b_v d_v} = \frac{733 - 0}{0.9 \cdot 40 \cdot 49.1} = 0.41 \text{ ksi} < 0.50 \text{ ksi}$$

Therefore,

[5.8.2.7]

$s_{max} = 0.8 d_v = 0.8 \cdot 49.1 = 39.3$ in

or

$s_{max} = 24.0$ in <u>GOVERNS</u>

$s_{max} = 24.0$ in >> 6 in <u>OK</u>

Use #5 double "U" stirrups at 6 inch spacing for shear reinforcement in the pier cap.

[5.6.3]

4. Cantilever Capacity Check

Check the capacity of the cantilever using the strut-and-tie method. A strut-and-tie model should be considered for the design of members where the distance between the center of applied load and the supporting reaction is less than twice the member thickness. Strut-and-tie models provide a way to approximate load patterns where conventional methods cannot due to a non-linear strain distribution. Begin by determining the vertical reaction applied to the cantilever.

Self weight of cantilever:

$$P_{self} = \left(\frac{40}{12}\right) \cdot \left(\frac{56+36}{2}\right) \cdot \left(\frac{1}{12}\right) \cdot 5.25 \cdot 0.150 = 10.1 \text{ kips}$$

Dead load from the superstructure is:

P_{super} = 287.3 kips

The reaction from one lane of live load is:

$P_{LL} = 143.6 \text{ kips (LL Case 3)}$

Then the factored vertical load on the cantilever is:

$$1.25 \cdot (10.1 + 287.3) + 1.75 \cdot (143.6) = 623.1 \text{ kips}$$

[Fig. 5.6.3.3.2-1]

Assume a simple model with a single horizontal tension tie centered on the top reinforcement and a single compression strut between the center of the tension tie below the bearing and the center of the column. For simplicity and conservatism, the pedestal was ignored. A schematic with the resultant loads in the strut and tie is shown in Figure 11.4.3.8.

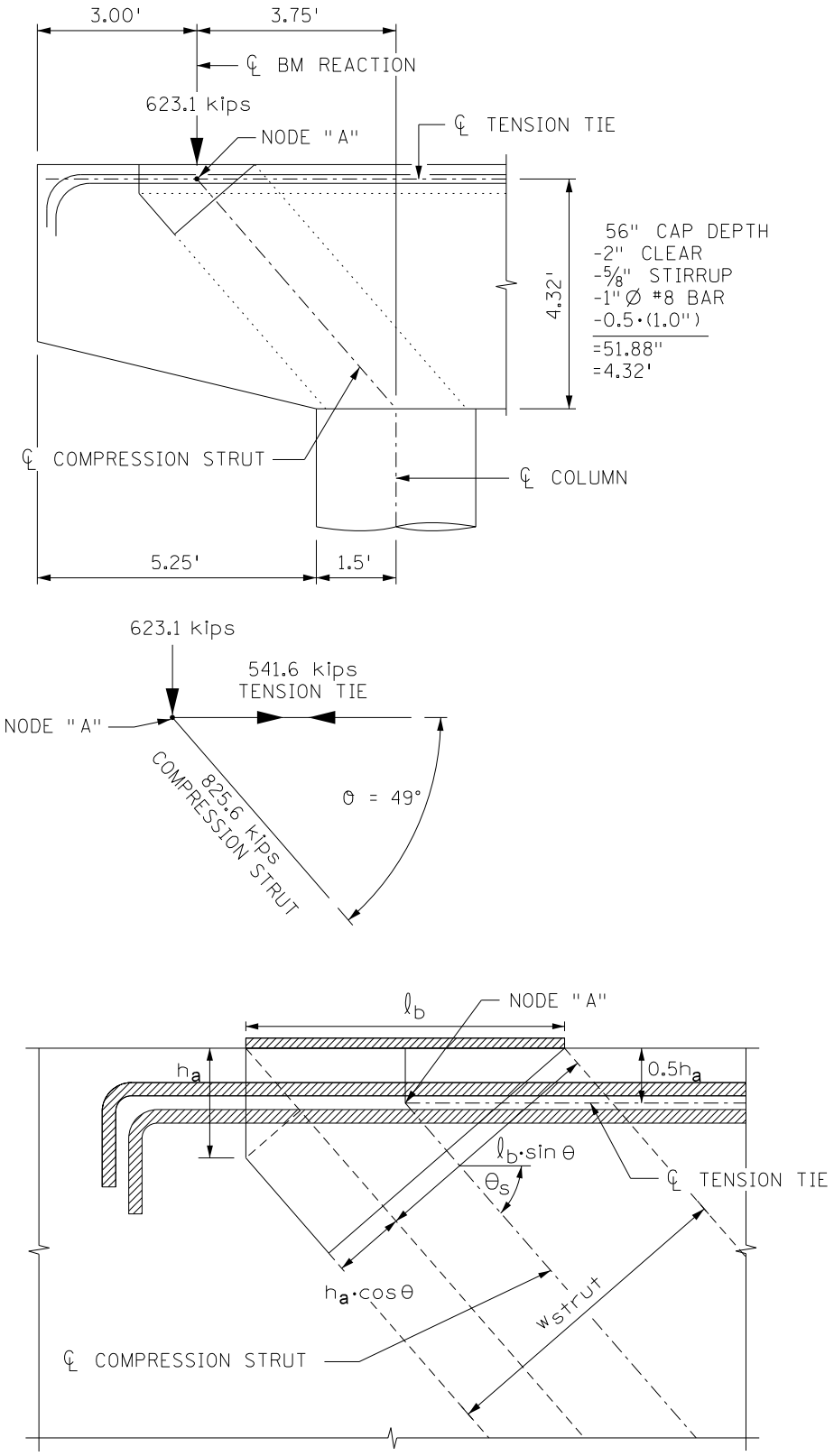

Figure 11.4.3.8
Cantilever Strut and Tie Model

Tension Tie

[5.6.3.3] The required capacity of the tension tie P_{ntreq} is:

$$P_{ntreq} = \frac{T}{\phi} = \frac{541.6}{0.9} = 601.8 \text{ kips}$$

The tie is composed of 16-#8 bars (A_s = 12.64 in^2). The bars must be developed by the time they reach the inside face of the concrete strut.

[5.11.2.4.1] The development length, l_{hb}, for deformed bars in tension terminating in a standard hook shall be greater than the smaller of:

- 8.0 bar diameters, and
- 6.0 in.

The concrete density modification factor, λ, for normal-weight concrete is 1.0.

[5.4.2.8] The development length for tension tie #8 bars with standard hooks and λ= 1.0:

$$\ell_{hb} = \frac{38.0 \cdot d_b}{60.0} \cdot \frac{f_y}{\lambda \cdot \sqrt{f'_c}} = \frac{38.0 \cdot 1.00}{60.0} \cdot \frac{60}{1.0 \cdot \sqrt{4}} = 19.0 \text{ in}$$

[5.11.2.4.2] The bars are epoxy coated with side cover ≧ 2.5 in, so λ_{cf} = 1.2
The hook end cover ≧ 2 in, so λ_{rc} = 0.8

Then $\ell_{hb} = 19.0 \cdot 1.2 \cdot 0.8 = 18.2$ in

By inspection, the tension tie will be developed at the point where it intersects the inside face of the concrete strut.

The actual capacity of the tie is:

[5.6.3.4.1] $P_{nt} = f_y \cdot A_{st} = 60 \cdot 12.64 = 758.4$ kips > 601.3 kips <u>OK</u>

Strut-to-Node Interface Compression

[5.6.3.5.2] At node "A", the strut is anchored by bearing and reinforcement (CCT node). The effective cross-sectional area of the strut-to-node interface, A_{cn}, is determined using the width and thickness of the strut. The width of the strut (measured along direction parallel to pier cap) is affected by the bearing pad width, the angle of the strut, and the height of the node back face. The bearing pads are 24 inches wide and the strut is inclined at 49 degrees from horizontal (Figure 11.4.3.8).

The height of the node back face h_a is:

h_a = 2 · (2.0 + 0.625 + 1.0 + 1.0 · 0.5) = 8.25 in

Then the width of the strut W_{strut} is:

$$W_{strut} = \ell_b \cdot (\sin\theta) + h_a \cdot (\cos\theta)$$

$$= 24 \cdot (\sin 49) + 8.25 \cdot (\cos 49) = 23.53 \text{ in}$$

For the length of the strut (measured in direction perpendicular to pier cap), include the loaded length of the bearing pads plus the distance between the pads:

L_{strut} = 12 + 5 + 12 = 29.00 in

Then the cross-sectional area of the strut-to-node interface is:

$$A_{cn} = W_{strut} \cdot L_{strut} = 23.53 \cdot 29.00 = 682.37 \text{ in}^2$$

[5.6.3.5.3] The limiting compressive stress at the node face is determined by the concrete compressive strength, confinement modification factor, and concrete efficiency factor.

Begin with the simple, conservative assumption that m = 1. If this does not work, we can refine by calculating A_1 and A_2 per AASHTO Article 5.6.3.5.3.

The concrete efficiency factor is dependent on whether crack control reinforcement per AASHTO Article 5.6.3.6 is provided. For this example, we will initially assume crack control reinforcement is not provided and use the reduced value for v= 0.45. If additional strength is needed, crack control bars will be added to increase the resistance.

The limiting compressive stress at the strut-to-node interface is:

$$f_{cu} = m \cdot v \cdot f'_c = 1.0 \cdot 0.45 \cdot 4.0 = 1.80 \text{ ksi} \qquad \underline{\text{OK}}$$

[5.6.3.3]
[5.6.3.5.1] The factored resistance on the strut-to-node interface is :

$$\phi P_n = \phi \cdot A_{cn} \cdot f_{cu} = 0.7 \cdot 682.37 \cdot 1.80 = 859.8 \text{ kips} > 825.6 \text{ kips} \quad \underline{\text{OK}}$$

Crack Control Reinforcement

Since adequate resistance is provided without the addition of crack control reinforcement, AASHTO Article 5.6.3.6 is waived.

[5.7.3.4] **5. Longitudinal Skin Reinforcement**

The effective depth for both positive and negative moment reinforcement is greater than 3.0 feet, so skin reinforcement is required. The minimum area of skin reinforcement required on each vertical face of the pier cap is:

Positive moment region:

$$A_{sk} \geq 0.012 \cdot (d_\ell - 30) = 0.012 \cdot (52.81 - 30) = 0.27 \text{ in}^2/\text{ft}$$

but not more than $A_{sk} \le \frac{A_s}{4} = \frac{8.00}{4} = 2.00 \text{ in}^2/\text{ft}$

Negative moment region:

$A_{sk} \ge 0.012\left(51.88 - 30\right) = 0.26 \text{ in}^2/\text{ft}$

but not more than $A_{sk} \le \frac{12.64}{4} = 3.16 \text{ in}^2/\text{ft}$

The skin reinforcement must be placed within d/2 of the main reinforcement with a spacing not to exceed $^d/_6$ or 12 inches.

Using the smallest d =51.88,

$$\frac{d}{2} = \frac{51.88}{2} = 25.94 \text{ in}$$

$$\frac{d}{6} = \frac{51.88}{6} = 8.65 \text{ in}$$

Choose 5-#5 bars equally spaced between the top and bottom reinforcement on each face. (Spacing = 7.86 in and A_s=0.47 in^2/ft)

[5.10.8]

6. Temperature Steel Check

A minimum amount of reinforcement needs to be provided to ensure that shrinkage and temperature cracks remain small and well distributed. The minimum amount required on each face and in each direction is:

Total req'd $A_{sreq} \ge \frac{1.30 \cdot b \cdot h}{2 \cdot (b + h) \cdot f_y} = \frac{1.30 \cdot 40 \cdot 56}{2 \cdot (40 + 56) \cdot 60} = 0.25 \text{ in}^2/\text{ft}$

and $0.11 \le A_{sreq} \le 0.60$

The actual total longitudinal reinforcement area on each vertical face is:

$$A_s = \frac{\left[2 \cdot (0.79) + 1 \cdot (1.00) + 5 \cdot (0.31)\right] \cdot 12}{56} = 0.89 \frac{\text{in}^2}{\text{ft}} > 0.25 \frac{\text{in}^2}{\text{ft}} \quad \underline{\text{OK}}$$

The actual total transverse reinforcement area on each face is:

$$A_s = \frac{0.31 \cdot 12}{6} = 0.62 \frac{\text{in}^2}{\text{ft}} > 0.25 \frac{\text{in}^2}{\text{ft}} \quad \underline{\text{OK}}$$

7. Summary

Figure 11.4.3.9 details the final reinforcement in the pier cap.

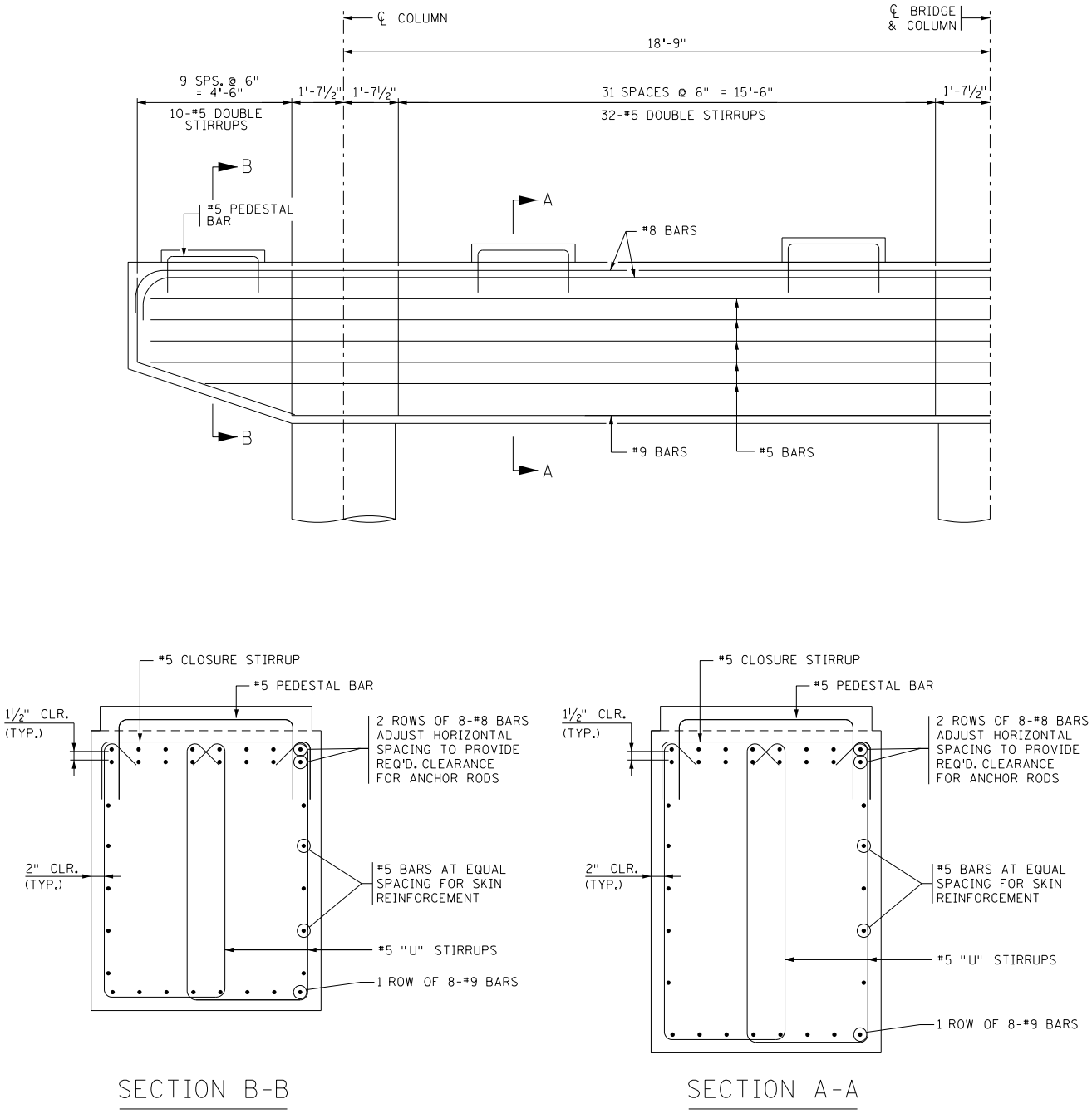

Figure 11.4.3.9
Pier Cap Reinforcement

E. Column Design

Design Forces

Table 11.4.3.15 lists the unfactored axial loads and bending moments at the top and bottom of the columns when the pier is subjected to various loadings.

The sign convention for the axial loads is positive for downward forces and negative for upward forces. The sign convention for the bending moments in the parallel direction (M_{par}) is beam convention. Positive moments cause tension on the "bottom side" of the column member which is defined as the right side of the column. Negative moments cause tension on the "top side" which is defined as the left side. (See Figure 11.4.3.10.)

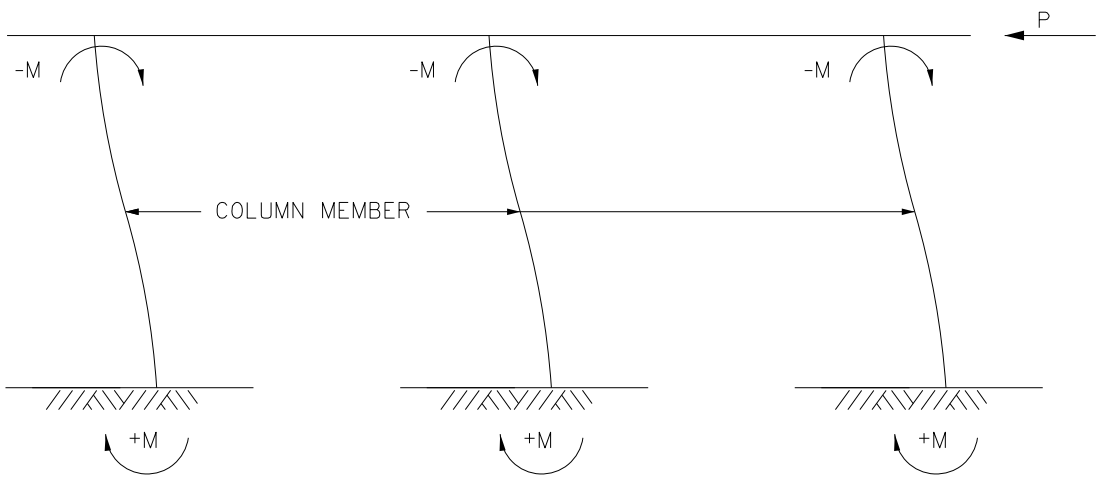

Figure 11.4.3.10
Sign Convention for M_{par}

For moments in the perpendicular direction (M_{perp}), all lateral loads are assumed applied in the same direction. Therefore, all moments are shown as positive.

Moments shown in the table due to wind transverse to the bridge are based on a wind directed from right to left. (Column 3 is on the windward side of the pier.)

Table 11.4.3.15 – Unfactored Column Member Forces (k, k-ft)

Load	Force	Column 1 (Leeward)		Column 2 (Center)		Column 3 (Windward)	
		Top	Bottom	Top	Bottom	Top	Bottom
Dead Load	P	616	637	674	695	616	637
	M_{par}	-10	5	0	0	10	-5
	M_{perp}	0	0	0	0	0	0
Live Load Case 1 One Lane	P	108	108	137	137	-10	-10
	M_{par}	-72	32	59	-32	7	-6
	M_{perp}	0	0	0	0	0	0
Live Load Cases 2 and 3 One Lane (max/min)	P	234/19	234/19	196/9	196/9	19/-5	19/-5
	M_{par}	47/-40	19/-12	0/-6	13/0	40/-20	20/-19
	M_{perp}	0	0	0	0	0	0
Live Load Cases 4, 5, and 6 Two Lanes (max/min)	P	248/47	248/47	297/156	297/156	47/-13	47/-13
	M_{par}	-46/-82	38/25	67/0	0/-34	66/-4	5/-32
	M_{perp}	0	0	0	0	0	0
Live Load Case 7 Three Lanes	P	97	97	304	304	97	97
	M_{par}	-79	38	0	0	79	-38
	M_{perp}	0	0	0	0	0	0
Live Load Case 8 Four Lanes	P	146	146	215	215	146	146
	M_{par}	-34	16	0	0	34	-16
	M_{perp}	0	0	0	0	0	0
Braking	P	0	0	0	0	0	0
	M_{par}	0	0	0	0	0	0
	M_{perp}	28	267	28	268	28	267
45 ºF Temperature Drop	P	-9	-9	18	18	-9	-9
	M_{par}	129	-141	0	0	-129	141
	M_{perp}	0	0	0	0	0	0
35º F Temperature Rise	P	7	7	-14	-14	7	7
	M_{par}	-100	109	0	0	100	-109
	M_{perp}	0	0	0	0	0	0
Wind at 0º on Superstructure and Substructure (Strength III)	P	30	30	0	0	-30	-30
	M_{par}	-214	235	-239	247	-214	235
	M_{perp}	0	0	0	0	0	0
Wind at 15º on Superstructure and Substructure (Strength III)	P	27	27	0	0	-27	-27
	M_{par}	-191	210	-214	221	-191	210
	M_{perp}	6	86	6	86	6	86
Wind at 30º on Superstructure and Substructure (Strength III)	P	25	25	0	0	-25	-25
	M_{par}	-176	193	-197	203	-176	193
	M_{perp}	13	179	13	180	13	179
Wind at 45º on Superstructure and Substructure (Strength III)	P	20	20	0	0	-20	-20
	M_{par}	-142	155	-158	164	-142	155
	M_{perp}	17	236	16	237	17	236
Wind at 60º on Superstructure and Substructure (Strength III)	P	10	10	0	0	-10	-10
	M_{par}	-73	81	-82	85	-73	81
	M_{perp}	21	288	19	290	21	288
Wind at 0º on Superstructure and Substructure (Strength V)	P	15	15	0	0	-15	-15
	M_{par}	-103	113	-115	119	-103	113
	M_{perp}	0	0	0	0	0	0
Wind at 15º on Superstructure and Substructure (Strength V)	P	13	13	0	0	-13	-13
	M_{par}	-88	97	-99	102	-88	97
	M_{perp}	4	48	3	48	4	48

Table 11.4.3.15 – Unfactored Column Member Forces (k, k-ft) (cont'd)

Load	Force	Column 1 (Leeward)		Column 2 (Center)		Column 3 (Windward)	
		Top	Bottom	Top	Bottom	Top	Bottom
Wind at 30º on Superstructure and Substructure (Strength V)	P	12	12	0	0	-12	-12
	M_{par}	-82	90	-92	95	-82	90
	M_{perp}	6	83	6	84	6	83
Wind at 45º on Superstructure and Substructure (Strength V)	P	10	10	0	0	-10	-10
	M_{par}	-69	76	-77	80	-69	76
	M_{perp}	8	116	8	117	8	116
Wind at 60º on Superstructure and Substructure (Strength V)	P	5	5	0	0	-5	-5
	M_{par}	-35	38	-39	40	-35	38
	M_{perp}	10	137	9	138	10	137
Vertical Wind	P	2	2	-46	-46	-89	-89
	M_{par}	4	2	0	4	4	2
	M_{perp}	0	0	0	0	0	0
Wind on Live Load at 0º	P	11	11	0	0	-11	-11
	M_{par}	-50	55	56	58	-50	55
	M_{perp}	0	0	0	0	0	0
Wind on Live Load at 15º	P	9	9	0	0	-9	-9
	M_{par}	-44	48	50	51	-44	48
	M_{perp}	2	15	-2	15	2	15
Wind on Live Load at 30º	P	9	9	0	0	-9	-9
	M_{par}	-41	44	46	47	-41	44
	M_{perp}	3	29	-3	29	3	29
Wind on Live Load at 45º	P	7	7	0	0	-7	-7
	M_{par}	-33	36	38	38	-33	36
	M_{perp}	4	39	-4	39	4	39
Wind on Live Load at 60º	P	4	4	0	0	-4	-4
	M_{par}	-17	18	19	19	-17	18
	M_{perp}	5	46	-5	46	5	46

The following three limit states are examined for the columns:

Strength I: $U_1 = \gamma_p \cdot DC + 1.75 \cdot LL + 1.75 \cdot BR + 0.50 \cdot TU$

Strength III: $U_3 = \gamma_p \cdot DC + 1.00 \cdot WS + 0.50 \cdot TU$

Strength V:

$U_5 = \gamma_p \cdot DC + 1.35 \cdot LL + 1.35 \cdot BR + 1.00 \cdot WS + 1.00 \cdot WL + 0.50 \cdot TU$

Load combinations were tabulated for the appropriate limit states for each of the various live load cases, wind angles, the temperature rise and fall, and also for maximum and minimum DC load factors.

Then the worst case loadings (maximum axial load with maximum moment, maximum moment with minimum axial load) were chosen from each limit state from the tabulated load combinations. These are shown

in Table 11.4.3.16. The critical cases for the column among those listed in the table are shown in bold print.

Table 11.4.3.16 - Column Design Forces

Load Combination		Axial Load P (kips)	M_{par} (kip-ft)	M_{perp} (kip-ft)
Strength I:	(a) Column 1 Bottom: γ_D= 1.25, LL Case 5, BR, Δ Temp = +35°F	1234	105	467
	(b) Column 2 Bottom: γ_D= 1.25, LL Case 7, BR, Δ Temp = -45°F	**1410**	**0**	**469**
	(c) Column 3 Bottom: γ_D = 1.25, LL Case 8, BR, Δ Temp = +35°F	1055	89	467
	(d) Column 3 Bottom: γ_D = 0.90, LL Case 5, BR, Δ Temp = -45°F	546	75	467
Strength III:	(a) Column 2 Bottom: γ_D = 1.25, Wind Skew = 60°, Δ Temp = -45°F	878	119	406
	(b) Column 3 Bottom: γ_D = 0.90, Wind Skew = 60°, Δ Temp = -45° F	555	179	403
	(c) Column 3 Bottom: γ_D = 0.90, Wind Skew = 0°, Vertical Wind, Δ Temp = -45° F	**402**	**398**	**0**
Strength V:	**(a) Column 1 Bottom: γ_D = 0.90, LL Case 6, BR, Wind Skew = 60°, Δ Temp = +35°F**	**646**	**135**	**461**
	(b) Column 2 Bottom: γ_D = 1.25, LL Case 7, BR, Wind Skew = 60°, Δ Temp = -45°F	1288	35	463
	(c) Column 3 Bottom: γ_D = 0.90, LL Case 3, BR, Wind Skew = 60°, Δ Temp = -45°F	**556**	**126**	**461**

[5.7.4.3] **Slenderness Effects**

Each column is considered unbraced in both the parallel and perpendicular directions. The dimension "L" from bottom of pier cap to top of footing is 17.58 feet.

In the parallel direction, a fixed condition exists at the bottom and a rotation-fixed, translation-free condition exists at the top. For this condition LRFD Table C4.6.2.5-1 recommends a K value of 1.20.

Then:

r = radius of gyration of a circular column

$$r = \sqrt{\frac{I}{A}} = \sqrt{\frac{\frac{\pi \cdot d^4}{64}}{\frac{\pi \cdot d^2}{4}}} = d/4$$

r = 0.25 · (column diameter)

=0.25 · (3) = 0.75 ft

$$\left(\frac{KL}{r}\right)_{par} = \frac{1.2(17.58)}{0.75} = 28.1 > 22$$

Therefore, slenderness effects need to be considered for the parallel direction.

In the perpendicular direction the columns can conservatively be considered as cantilevers fixed at the bottom. For this condition LRFD Table C4.6.2.5-1 recommends a K value of 2.1.

Then:

$$\left(\frac{KL}{r}\right)_{perp} = \frac{2.1\,(17.58)}{0.75} = 49.2 > 22$$

Therefore, slenderness effects need to be considered for the perpendicular direction, also.

Two choices are available to designers when including slenderness effects in the design of columns. A moment magnification method is described in LRFD Article 4.5.3.2.2. The other method is to use an iterative P-Δ analysis.

A P-Δ analysis was used for this example. For simplicity and in order to better match the computer model used, take the column height L equal to the distance from the top of footing to the centroid of the pier cap. Calculations are shown below for the Strength V(c) load case.

For the perpendicular direction, the factored moment and corresponding axial load from Table 11.4.3.16 is:

$$M_{perp} = 461 \text{ kip} - \text{ft}, \;\; P = 646 \text{ kips} \;\; \text{(Strength V(c))}$$

Then the maximum equivalent lateral force H_{perp} applied at the top of the column is:

$$H_{perp} = \frac{M_{perp}}{L} = \frac{461}{19.92} = 23.1 \text{ kips}$$

This force produces a perpendicular displacement Δ_{perp} at the top of the column:

$$\Delta_{perp} = \frac{H_{perp}L^3}{3EI} = \frac{23.1 \cdot [(19.92)(12)]^3}{3 \cdot (3644) \cdot (82448)} = 0.350 \text{ in}$$

The structural model used in the analysis contained gross section properties. To account for the reduced stiffness of a cracked column section, the displacement was multiplied by an assumed cracked section factor equal to 2.5. This factor is based on using LRFD Equation 5.7.4.3-2 with β_d equal to zero and corresponds to 40 percent of the gross section properties being effective. (Other references suggest values ranging from 30 percent to 70 percent be used for columns.) After updating the equivalent lateral force for the P-Δ moment, three additional iterations were performed. The final longitudinal displacement was found to be 0.389 inches and the additional perpendicular moment due to slenderness was 52.4 kip-feet. See Figure 11.4.3.12 and Table 11.4.3.17 for a summary of the perpendicular direction P-Δ analysis for the Strength V(c) limit state.

For the parallel direction, the corresponding factored moment from Table 11.4.3.16 is:

$$M_{par} = 135 \text{ kip} - \text{ft} \quad \text{(Strength V (c))}$$

A procedure similar to that done for the perpendicular direction was used for the P-Δ analysis. For the parallel direction, equations used to compute H_{par} and Δ_{par} are for a cantilever column fixed at one end and free to deflect horizontally but not rotate at the other end (taken from *Manual of Steel Construction, LRFD Design, Thirteenth Edition*, page 3-218). For this example, values of ΔH converged after 2 iterations. In practice, more iterations may be required. See Figure 11.4.3.13 and Table 11.4.3.18 for a summary of the parallel direction P-Δ analysis. This process was repeated for the other three critical load cases shown in Table 11.4.3.16.

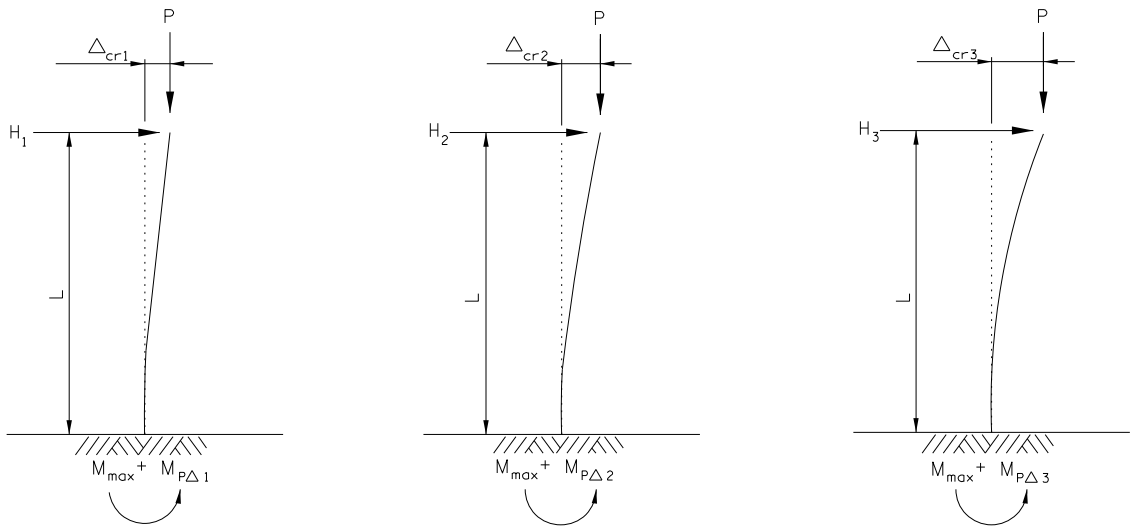

$$H_1 = \frac{M_{max}}{L}$$

$$\Delta_{g1} = \frac{H_1 L^3}{3EI}$$

$$\Delta_{cr1} = F_{cr} \cdot \Delta_{g1}$$

$$M_{P\Delta 1} = P \cdot \Delta_{cr1}$$

$$\Delta H_1 = \frac{M_{P\Delta 1}}{L}$$

$$H_2 = H_1 + \Delta H_1$$

$$\Delta_{g2} = \frac{H_2 L^3}{3EI}$$

$$\Delta_{cr2} = F_{cr} \cdot \Delta_{g2}$$

$$M_{P\Delta 2} = P \cdot \Delta_{cr2}$$

$$\Delta H_2 = \frac{M_{P\Delta 2}}{L}$$

$$H_3 = H_1 + \Delta H_2$$

$$\Delta_{g3} = \frac{H_3 L^3}{3EI}$$

$$\Delta_{cr3} = F_{cr} \cdot \Delta_{g3}$$

$$M_{P\Delta 3} = P \cdot \Delta_{cr3}$$

Figure 11.4.3.12
Perpendicular Direction P-Δ Procedure

Table 11.4.3.17 – Perpendicular P-Δ Moment

Equiv. Lateral Force H (kips/column)	Axial Load P (kips/column)	Δ_g for gross section properties (in)	Cracked Section Factor F_{cr}	Δ_{cr} for cracked section (in)	$M_{P\Delta}$ (k-ft)	ΔH to produce $M_{P\Delta}$ (kips)
23.1	646	0.350	2.5	0.875	47.1	2.4
25.5	646	0.386	2.5	0.965	51.9	2.6
25.7	646	0.389	2.5	0.973	52.4	2.6
Add 52 k-ft to column for slenderness in the perpendicular direction						

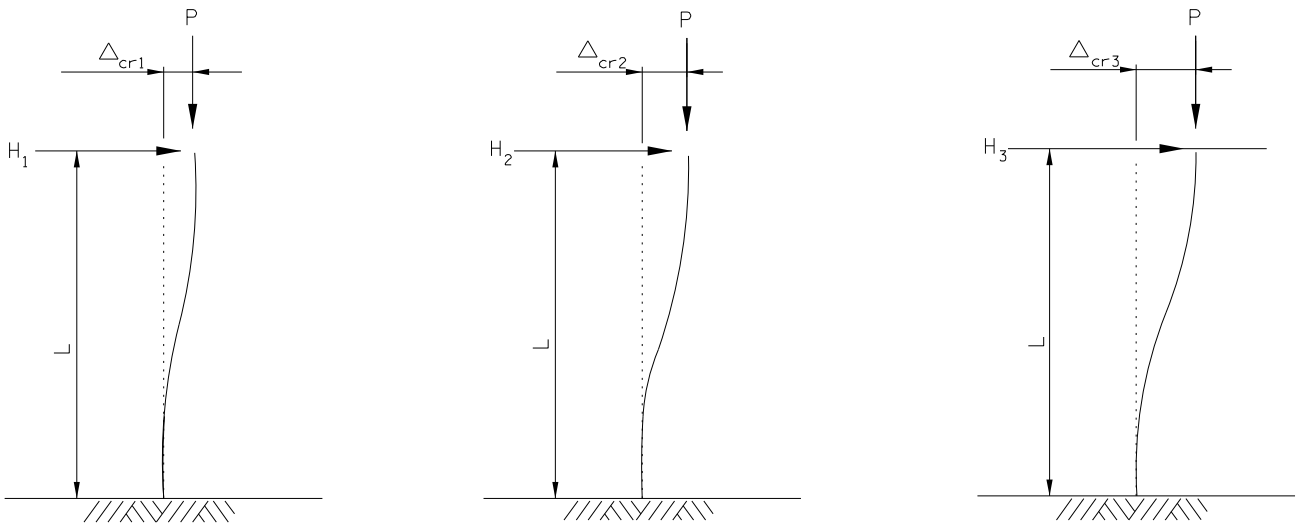

$$H_1 = \frac{2M_{max}}{L}$$

$$\Delta_{g1} = \frac{H_1 L^3}{12EI_g}$$

$$\Delta_{cr1} = F_{cr} \cdot \Delta_{g1}$$

$$M_{P\Delta 1} = P \cdot \Delta_{cr1}$$

$$\Delta H_1 = \frac{2 \cdot M_{P\Delta 1}}{L}$$

$$H_2 = H_1 + \Delta H_1$$

$$\Delta_{g2} = \frac{H_2 L^3}{12EI}$$

$$\Delta_{cr2} = F_{cr} \cdot \Delta_{g2}$$

$$M_{P\Delta 2} = P \cdot \Delta_{cr2}$$

$$\Delta H_2 = \frac{2 \cdot M_{P\Delta 2}}{L}$$

$$H_3 = H_1 + \Delta H_2$$

$$\Delta_{g3} = \frac{H_3 L^3}{12EI}$$

$$\Delta_{cr3} = F_{cr} \cdot \Delta_{g3}$$

$$M_{P\Delta 3} = P \cdot \Delta_{cr3}$$

Figure 11.4.3.13
Parallel Direction P-Δ Procedure

Table 11.4.3.18 – Parallel P-Δ Moment

Equiv. Lateral Force H (kips/column)	Axial Load P (kips/column)	Δ_g for gross section properties (in)	Cracked Section Factor F_{cr}	Δ_{cr} cracked section (in)	$M_{P\Delta}$ (k-ft)	ΔH to produce $M_{P\Delta}$ (kips)
13.55	646	0.0513	2.5	0.1283	6.9	0.69
14.24	646	0.0539	2.5	0.1348	7.3	0.73
14.28	646	0.0541	2.5	0.1353	7.3	0.73
Add 7 k-ft to column for slenderness in the parallel direction						

The design forces presented in Table 11.4.3.19 are the factored axial loads and resultant moments that include P-Δ effects. Because of the symmetry of the round cross section, the moments in the parallel and perpendicular directions can be combined using the square root of the sum of the squares (Pythagorean Theorem).

$$M_R = \sqrt{M_{par}^{\ 2} + M_{perp}^{\ 2}}$$

Table 11.4.3.19 – Critical Column Design Forces (kips, kip-ft)

Load Combination	Axial Load	M_{par}	M_{par} P-Δ	Total M_{par}	M_{perp}	M_{perp} P-Δ	Total M_{perp}	Resultant M_R
Strength I (a)	1410	0	0	0	469	135	604	604
Strength III (c)	402	398	13	411	0	0	0	411
Strength V (a)	646	135	7	142	461	52	513	532
Strength V (c)	556	126	6	132	461	44	505	522

The minimum amount of column reinforcement must be such that:

[5.7.4.2-3]

$$\frac{A_s f_y}{A_g f_c'} \geq 0.135$$

Then:

$$\text{Min } A_s \geq \left(\frac{A_g f_c'}{f_y}\right) \cdot 0.135 = \left(\frac{1018 \cdot 4.0}{60.0}\right) \cdot 0.135 = 9.16 \text{ in}^2$$

Try 12-#8 bars (A_s= 9.48 in^2).

A computer program was used to generate the column strength interaction diagram shown in Figure 11.4.3.13. The figure also displays the design axial loads and moments for the critical load cases. All values fall well within the capacity of the column.

The interaction diagram includes ϕ factors of 0.90 for flexure and 0.75 for axial compression.

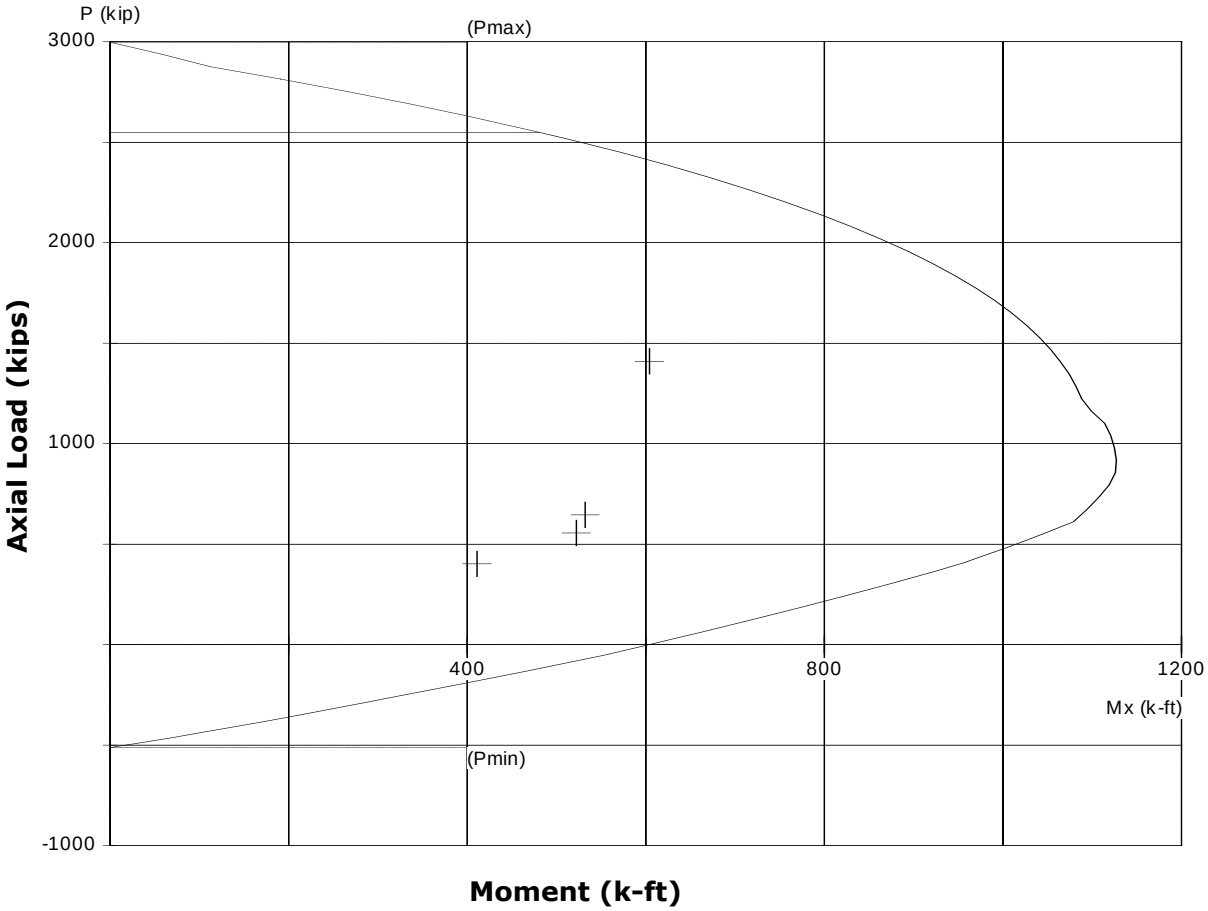

Figure 11.4.3.13
Column Interaction Curve For
36 inch Diameter Column With 12-#8 Bars

[5.7.4.2]

Reinforcement Limit Check

For non-prestressed columns the maximum amount of longitudinal reinforcement permitted is:

$$\frac{A_s}{A_g} = \frac{9.48}{1018} = 0.00931 \le 0.08 \qquad \underline{\text{OK}}$$

[5.10.6.2]

Column Spirals

Per MnDOT standard practice, use spiral reinforcing for columns with diameters up to 42”. Use #4E bars with a 3” pitch for the spiral. The anchorage of the spiral reinforcement shall be provided by 1½ extra turns of spiral bar at each end of the spiral unit.

[5.7.4.6]

Check reinforcement ratio of spiral to concrete core:

$$p_s = \frac{\text{volume of spiral in one loop}}{\text{volume of core for one pitch spacing}}$$

For a clear cover of 2", diameter of the core $D_c = 32$ in.
Spiral reinforcement area $A_{sp} = 0.20$ in^2
Spiral bar diameter $d_b = 0.50$ in
Pitch spacing p = 3.0 in

Length of one loop

$$\ell_{sp} = \sqrt{[\pi \cdot (D_c - d_b)]^2 + p^2} = \sqrt{[\pi \cdot (32 - 0.50)]^2 + (3.0)^2} = 99.01 \text{ in}$$

Then actual

$$p_s = \frac{A_{sp} \cdot \ell_{sp}}{\left(\frac{\pi \cdot D_c^{\,2}}{4}\right) \cdot p} = \frac{0.20 \cdot 99.01}{\left(\frac{\pi \cdot 32^2}{4}\right) \cdot 3.0} = 0.00821$$

Required minimum

$$p_s = 0.45 \cdot \left(\frac{A_g}{A_c} - 1\right) \cdot \frac{f'_c}{f_{yh}}$$

$$= 0.45 \cdot \left[\frac{1018}{\left(\frac{\pi \cdot 32^2}{4}\right)} - 1\right] \cdot \frac{4}{60} = 0.00797 < 0.00821 \qquad \underline{\text{OK}}$$

F. Piling Design

Loads

A different computer model was used for the piling and footing design than used previously for the cap and column design. The column in the revised model extends from the centroid of the cap to the top of the piling (1'-0" above the footing bottom). The braking, wind, and temperature loads applied to the revised model remain the same as those applied in the cap and column design. Additional loads included for the piling and footing design include the weight of the footing and an assumed 1'-0" of earth.

Additional DC due to footing:

$$P = 10.0 \cdot 13.0 \cdot 4.50 \cdot 0.150 = 87.8 \text{ kips}$$

$$M_{par} = M_{perp} = 0 \text{ kip} - \text{ft}$$

Earth above footing EV:

$$P = 1.0 \cdot \left((10 \cdot 13) - \frac{1018}{144} \right) \cdot (0.120) = 14.8 \text{ kips}$$

$$M_{par} = M_{perp} = 0 \text{ kip} - \text{ft}$$

For the earth loads, use a maximum load factor of 1.35 and a minimum load factor of 0.90.

Also, the dynamic load allowance is removed from the live load when designing foundation components entirely below ground.

The procedure for computing the critical loads for piling design is the same as for determining the loads at the bottom of the column. However, for the piling design, the focus is on load combinations that maximize the axial load and the bending moment. Also, since the piling layout is not identical in both the perpendicular and parallel direction, it is possible that a load combination different than what was critical for the columns could govern the piling design.

The values for the maximum loadings for piling design are shown in Table 11.4.3.20.

Table 11.4.3.20 – Piling Design Forces

Load Combination		Axial Load (kips)	M_{par} (kip·ft)	M_{par} P-Δ (kip·ft)	Total M_{par} Bending Moment (kip·ft)	M_{perp} (kip·ft)	M_{perp} P-Δ (kip·ft)	Total M_{perp} Bending Moment (kip·ft)
Str I	(a) Column 1: γ_D=1.25, LL Case 5, Δ Temp = +35°F	1298	81	12	93	540	186	726
	(b) Column 2: γ_D=1.25, LL Case 7, Δ Temp = -45°F	1455	0	0	0	542	221	763
	(c) Column 2: γ_D=1.25, LL Case 4, Δ Temp = -45°F	1319	44	7	51	542	190	732
Str III	(a) Column 1: γ_D=1.25, LL Case 7, Wind skew=60°, Δ Temp = -45°F	946	179	18	197	464	101	565
	(b) Column 2: γ_D=1.25, LL Case 7, Wind skew=15°, Δ Temp = -45°F	1005	139	15	154	466	111	577
Str V	(a) Column 1: γ_D=1.25, LL Case 5, Wind skew=60°, Δ Temp = +35°F	1220	112	15	127	533	167	700
	(b) Column 2: γ_D=1.25, LL Case 7, Wind skew=60°, Δ Temp = -45°F	1352	41	6	47	534	195	729

Determine Required Number of Piles

As a starting point, estimate the number of piles needed by calculating the number of piles required to resist the largest axial load and then add 10 to 20% more piles to resist overturning.

$$N_{axial} = \left(\frac{1455}{200}\right) = 7.3 \text{ piles}$$

Try the trial pile layout presented in Figure 11.4.3.15 with 10 piles.

Knowing the loads applied to the footing and the layout of the piles, the force in each pile can be determined. The equation to be used is:

$$P = \left[\frac{\text{Axial Load}}{\text{Number of Piles}}\right] + \left[\frac{M_{par} \cdot x_{par}}{\sum x_{par}^{2}}\right] + \left[\frac{M_{perp} \cdot x_{perp}}{\sum x_{perp}^{2}}\right]$$

The equation assumes that the footing functions as a rigid plate and that the axial force in the piles due to applied moments is proportional to the distance from the center of the pile group.

$$\sum x_{par}^2 = 2 \cdot 3.50^2 + 2 \cdot 1.75^2 + 2 \cdot 0^2 + 2 \cdot (-1.75)^2 + 2 \cdot (-3.50)^2 = 61.25 \text{ ft}^2$$

$$\sum x_{perp}^2 = 3 \cdot 5.00^2 + 2 \cdot 2.50^2 + 1 \cdot 0^2 + 2 \cdot (-2.50)^2 + 3 \cdot (-5.00)^2 = 175.00 \text{ ft}^2$$

Then, for example, the Strength I(a) Corner Pile 1 load is:

$$P = \frac{1298}{10} + \frac{93 \cdot 3.50}{61.25} + \frac{726 \cdot 5.00}{175.00} = 155.9 \text{ kips}$$

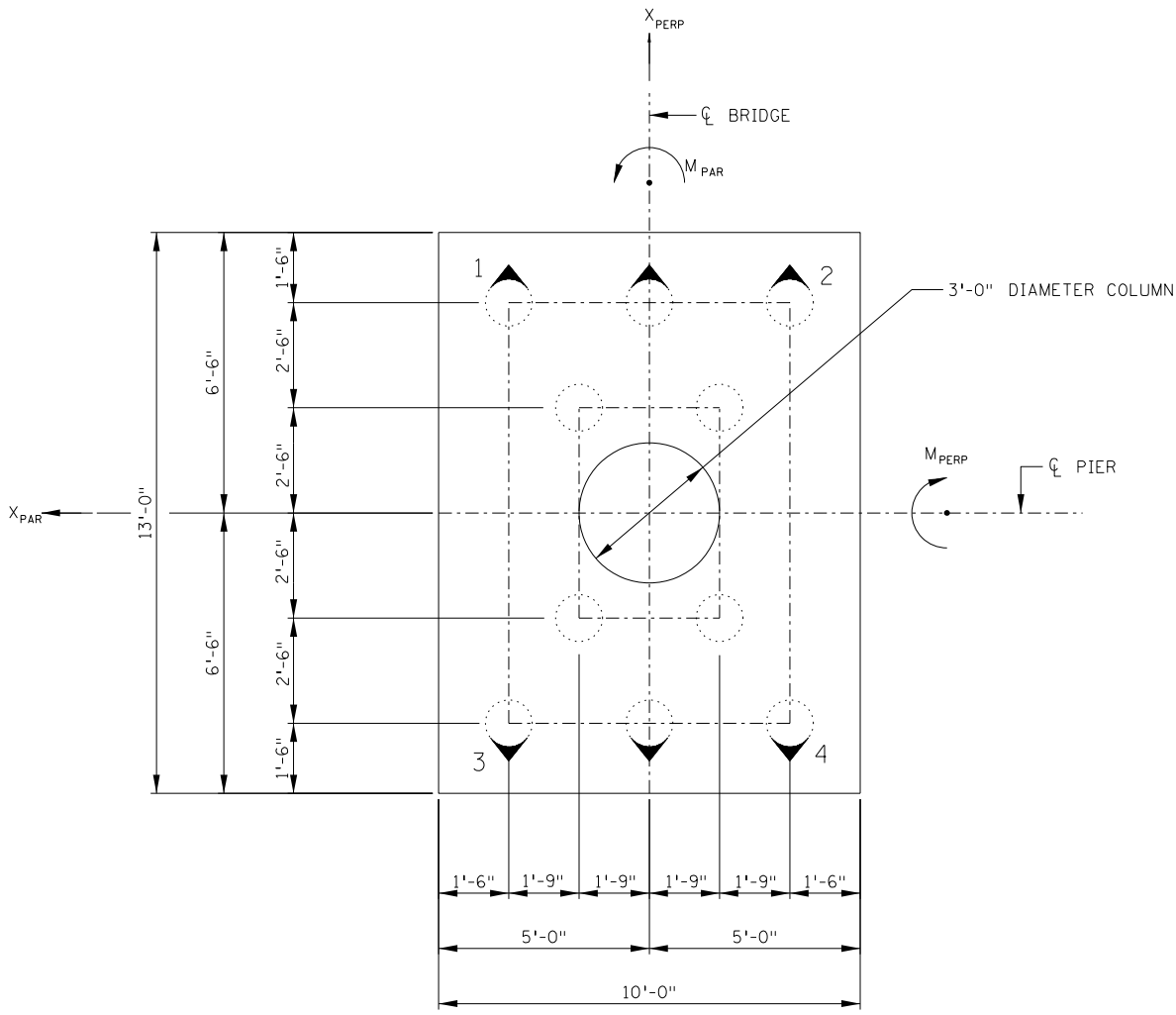

Figure 11.4.3.15
Trial Pile Layout

The factored pile loads at each corner of the footing (as identified in Figure 11.4.3.15) are presented in Table 11.4.3.21. All are below the 200 kip capacity of the piles.

Table 11.4.3.21 – Factored Pile Loads

	Corner Pile Loads (kips)			
Load Combination	**1**	**2**	**3**	**4**
Strength I(a)	155.9	145.2	114.4	103.7
Strength I(b)	167.3	167.3	123.7	123.7
Strength I(c)	155.7	149.9	113.9	108.1
Strength III(a)	122.0	99.5	89.7	67.2
Strength III(b)	125.8	108.2	92.8	75.2
Strength V(a)	149.3	134.7	109.3	94.7
Strength V(b)	158.7	153.3	117.1	111.7

Pile Load Tables for Plan

Piles are driven until dynamic equation measurements indicate the pile has reached refusal or the required design load indicated in the plan. The nominal pile bearing resistance is monitored in the field using the MnDOT Pile Formula 2012 (MPF12) given in Article 2452.3.E.3 of the *MnDOT Standard Specifications For Construction, 2016 Edition*. Designers must calculate the pile load for the critical load case and show it in the plan, using the Standard Plan Note tables for piers with piling (see Appendix 2-H of this manual).

The critical load case for the pier piling is:

Strength I at Column 2 with γ = 1.25,
Live Load Case 7, and Δ Temp. = -45° F.

The separated unfactored forces are:

P_{DL} = 783 kips, M_{DLpar} = M_{DLperp} =0 kip-ft
P_{EV} = 14.8 kips, M_{EVpar} = M_{EVperp} =0 kip-ft
P_{LL} = 257 kips, M_{LLpar} = M_{LLperp} = 0 kip-ft (w/o dyn. load allowance)
P_{BR} = 0 kips, M_{BRpar} = 0 kip-ft, M_{BRperp} = 309 kip-ft
P_{TU} = 13 kips, M_{TUpar} = M_{TUperp} = 0 kip-ft
$M_{P\Delta par}$ = 0 kip-ft, $M_{P\Delta perp}$ = 221 kip-ft (note that PΔ effects are based on factored loads)

First, compute separate factored pile loads due to dead load, live load, and overturning load for load table:

Factored P_{DL} (includes EV) $= 1.25 \cdot 783 + 1.35 \cdot 14.8 = 998.7$ kips

Factored $M_{DL,par}$ = Factored $M_{DL,perp}$ = 0 kip-ft

$$\text{Factored Pile Dead Load} = \left(\frac{998.7}{10}\right) \cdot \frac{1}{2} = 49.9 \text{ tons/pile}$$

Factored P_{LL} (w/o dynamic load allowance) = 1.75 · 257 = 449.8 kips

$$\text{Factored } M_{LLpar} = \text{Factored } M_{LLperp} = 0 \text{ kip} - \text{ft}$$

$$\text{Factored Pile Live Load} = \left(\frac{449.8}{10}\right) \cdot \frac{1}{2} = 22.5 \text{ tons/pile}$$

$$\text{Factored } P_{OT} = 0.50 \cdot 13 = 6.5 \text{ kips}$$

$$\text{Factored } M_{OTpar} = 0 \text{ kip} - \text{ft}$$

$$\text{Factored } M_{OTperp} = 1.75 \cdot (309) + 221 = 761.8 \text{ kip} - \text{ft}$$

$$\text{Factored Pile OT Load} = \left(\frac{6.5}{10} + \frac{0 \cdot 3.50}{61.25} + \frac{761.8 \cdot 5.00}{175.00}\right) \cdot \frac{1}{2} = 11.2 \text{ tons/pile}$$

$$\text{Factored Design Pile Load} = 49.9 + 22.5 + 11.2 = 83.6 \text{ tons/pile}$$

The final results to be shown in the plan are:

PIER COMPUTED PILE LOAD – TONS/PILE	
FACTORED DEAD LOAD	49.9
FACTORED LIVE LOAD	22.5
FACTORED OVERTURNING	11.2
* FACTORED DESIGN LOAD	83.6

* BASED ON STRENGTH I LOAD COMBINATION

PIER REQUIRED NOMINAL PILE BEARING RESISTANCE FOR CIP PILES R_n– Tons/Pile		
FIELD CONTROL METHOD	φ_{dyn}	** R_n
MNDOT PILE FORMULA 2012 (MPF12) $R_n = 20\sqrt{\frac{W \times H}{1000}} \times \log\left(\frac{10}{S}\right)$	0.50	167.2
PDA	0.65	128.6

**R_n = (FACTORED DESIGN LOAD) / ϕ_{dyn}

G. Footing Design

Check Shear Capacity of Footing

Using a column diameter of 3′-0″ and a footing thickness of 4′-6″, the critical sections for shear and flexure for the footing can be found. Begin by determining the width of an equivalent square column.

$$A = \frac{\pi \cdot D^2}{4} = 1018 = b^2 \qquad b = 31.9 \text{ in, say } 32 \text{ in}$$

The critical section for one-way shear is located a distance d_v away from the face of the equivalent square column. Two-way shear is evaluated on a perimeter located $d_v/2$ away from the face of the actual round column. The same dimension $d_v/2$ is used to check two-way shear for a corner pile.

[5.8.2.9]

Estimate d_v as $0.9d_e$. Note that it is not appropriate to use 0.72h here because the tension reinforcement is located so high above the bottom of the footing.

Conservatively calculate d_e by assuming #10 bars in both directions and that the bars sit directly on top of the piles. Use the inside bar for d_e calculation. If shear capacity is a problem, check that the d_e value being

used corresponds to the critical section under investigation. If it doesn't, revise d_e and d_v values and recalculate shear capacity.

Then estimated $d_v = 0.9d_e = 0.9 \cdot (54 - 12 - 1.27 - \frac{1}{2} \cdot 1.27) = 36.1$ in

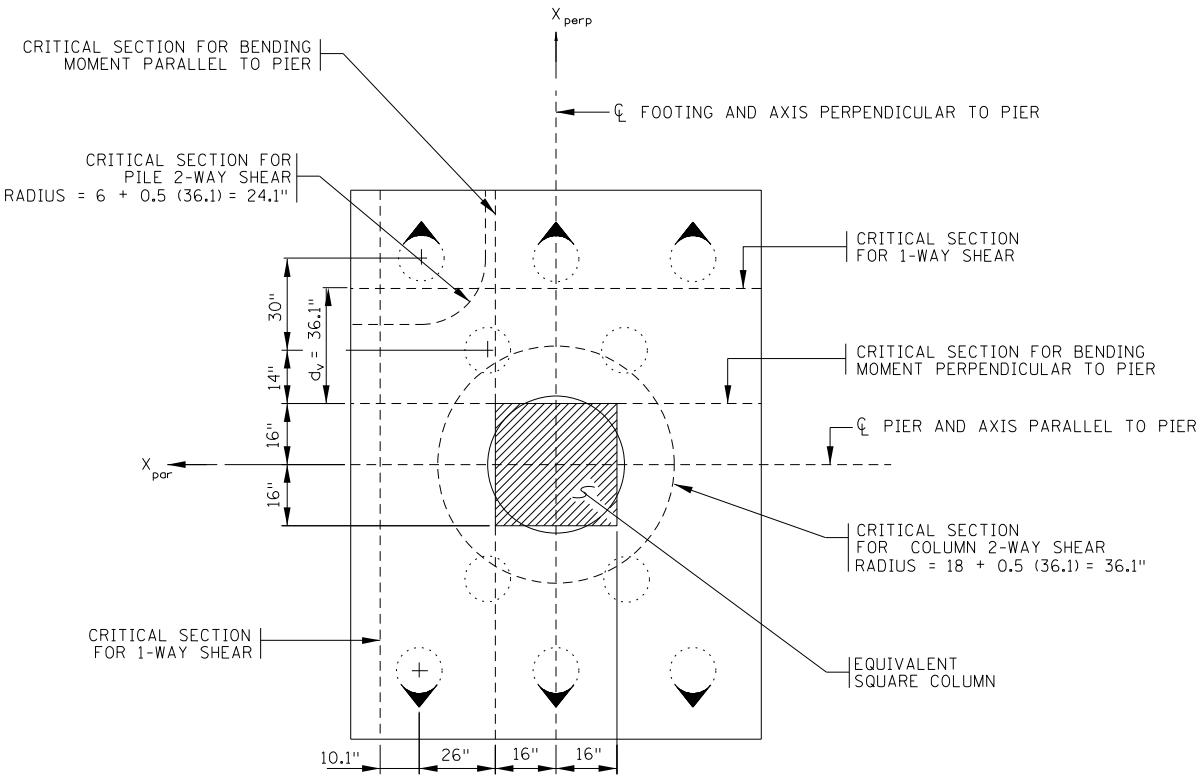

SHEAR AND BENDING CRITICAL SECTION LOCATIONS

Figure 11.4.3.16

The critical section for flexure is located at the face of the equivalent square column. All of the critical sections are presented in Figure 11.4.3.16.

Check One-Way Shear

The critical one-way shear section is located 36.1 inches away from the face of the equivalent square column.

For the portion of the footing that extends parallel to the pier all of the piles are within the critical shear section and no check is necessary.

For the portion of the footing that extends perpendicular to the pier, the three outermost piles lie outside of the critical shear section and the sum reaction must be resisted.

$$V_u = 167.3 \cdot 3 = 501.9 \text{ kips}$$

[5.8.3.3] The one-way shear capacity of the footing is:

$$\phi V_c = \phi \cdot 0.0316 \cdot \beta \cdot \lambda \cdot \sqrt{f'_c} \cdot b_v \cdot d_v$$

[5.8.3.4.1] The point of zero shear must be within $3 \cdot d_v$ of the column face to be able to assume $\beta = 2.0$. Since $3 \cdot d_v = 108.3''$, by inspection, the point of zero shear is within acceptable parameters. Therefore, it can be assumed that $\beta = 2.0$.

[5.4.2.8] For normal weight concrete, $\lambda = 1.0$.

Then:

$$\phi V_c = 0.90 \cdot 0.0316 \cdot 2 \cdot 1.0 \cdot \sqrt{4} \cdot (10 \cdot 12) \cdot 36.1$$
$$= 492.8 \text{ kips} < 501.9 \text{ kips} \qquad \text{1.8\% under, say } \underline{\text{OK}}$$

[5.13.3.6.3] **Check punching shear around the column**

Assume the entire column vertical load needs to be carried at the perimeter. If the footing has inadequate capacity, reduce the demand by subtracting piles and dead load "inside" of the perimeter.

The perimeter for two-way shear is:

$$b_o = 2 \cdot \pi \cdot 36.1 = 226.8 \text{ in}$$

Punching shear capacity is:

$$\phi V_n = (0.063 + \frac{0.126}{\beta_c}) \cdot \lambda \cdot \sqrt{f'_c} \cdot b_o \cdot d_v \le 0.126 \cdot \lambda \cdot \sqrt{f'_c} \cdot b_o \cdot d_v$$

The aspect ratio of the column (β_C) is 1.0. By inspection, the upper limit will govern.

$$\phi V_n = \phi V_c = \phi \cdot 0.126 \cdot \lambda \cdot \sqrt{f'_c} \cdot b_o \cdot d_v = 0.90 \cdot 0.126 \cdot 1.0 \cdot \sqrt{4} \cdot 226.8 \cdot 36.1$$
$$= 1857 \text{ kips} > 1455 \text{ kips} \qquad \underline{\text{OK}}$$

Check punching shear on a corner pile

The critical shear section is assumed to be $0.5d_v$ away from the outside edge of the pile. The shear section path with the shortest distance to the edge of the footing will provide the smallest capacity.

$$b_o = \frac{2 \cdot \pi \cdot 24.1}{4} + 18 + 18 = 73.9 \text{ in}$$

Once again using β_C equal to 1.0, inserting values into LRFD Equation 5.13.3.6.3-1 produces:

$$\phi V_n = \phi V_c = \phi \cdot 0.126 \cdot \lambda \cdot \sqrt{f'_c} \cdot b_o \cdot d_v = 0.90 \cdot 0.126 \cdot 1.0 \cdot \sqrt{4} \cdot 73.9 \cdot 36.1$$

$$= 605.1 \text{ kips} > 167.3 \text{ kips} \qquad \underline{\text{OK}}$$

[5.7.2.2]
[5.7.3.2]

Design Footing Reinforcement Perpendicular to Pier for Factored Moments

Determine the required area of flexural reinforcement to satisfy the Strength I(b) Load Combination. Five piles contribute to the design moment at the critical section for moment perpendicular to the pier. The three outer piles are located 44" away from the critical section. The two inner piles are located 14" away from the critical section.

$$P_{inner} = \frac{1455}{10} + \frac{763 \cdot 2.50}{175.00} = 156.4 \text{ kips/pile}$$

Then the design moment on the critical section is:

$$M_u = \left(3 \cdot 167.3 \cdot \frac{44}{12}\right) + \left(2 \cdot 156.4 \cdot \frac{14}{12}\right) = 2205 \text{ kip-ft}$$

Set up the equation to solve for the required area of steel assuming that ϕ = 0.90:

$$M_u = \phi \cdot A_s \cdot f_y \cdot \left[d - \frac{A_s \cdot f_y}{1.7 \cdot f'_c \cdot b}\right]$$

$$M_u = 0.90 \cdot A_s \cdot (60) \cdot \left[d - \frac{A_s \cdot 60}{1.7 \cdot 4 \cdot 120}\right] \cdot \left[\frac{1}{12}\right]$$

$$0.3309 \cdot A_s^2 - 4.5 \cdot d \cdot A_s + M_u = 0$$

$$A_s = \frac{4.5 \cdot d - \sqrt{20.25 \cdot d^2 - 1.3236 \cdot M_u}}{0.6618}$$

To compute "d" use the previous assumption that #10 bars are used for both mats of reinforcement and that they rest directly on top of the cut off piles. In addition, reduce "d" to permit either set of bars to rest directly on the pile.

$$d = \left[54 - 12 - 1.27 - \frac{1.27}{2}\right] = 40.10 \text{ in}$$

The required area of steel is 12.51 in^2. Try 10-#10 bars spaced at 12 inches. The provided area of steel is 12.70 in^2.

Confirm the initial assumption that ϕ=0.90

$$a = \frac{A_s \cdot f_y}{0.85 \cdot f'_c \cdot b} = \frac{12.70 \cdot 60}{0.85 \cdot 4 \cdot 120} = 1.87 \text{ in.}$$

$$c = \frac{a}{\beta_1} = \frac{1.87}{0.85} = 2.20 \text{ in.}$$

[5.7.2.1] Concrete compression strain limit $\varepsilon_c = 0.003$

[Table C5.7.2.1-1] Reinforcement tension-controlled strain limit $\varepsilon_{tl} = 0.005$

$$\varepsilon_t = (d - c)\left(\frac{\varepsilon_c}{c}\right) = (40.10 - 2.20)\left(\frac{0.003}{2.20}\right) = 0.0517 > \varepsilon_{tl} = 0.005$$

Therefore, the initial assumption of ϕ = 0.90 is OK.

[5.7.3.4] **Crack Control**

Crack control checks are not performed on footings.

[5.5.3] **Fatigue**

By inspection, fatigue is not checked for footings.

[5.7.3.3.2] **Check Minimum Reinforcement**

The modulus of rupture is:

[5.4.2.6] $f_r = 0.24 \cdot \lambda \cdot \sqrt{f'c} = 0.24 \cdot 1.0 \cdot \sqrt{4} = 0.48$ ksi

The gross moment of inertia is:

$$I_g = \frac{1}{12} \cdot b \cdot t^3 = \frac{1}{12} \cdot 120 \cdot (54)^3 = 1{,}574{,}640 \text{ in}^4$$

The distance from the tension face to the centroid is:

y_t = 27.0 in

Using $\gamma_1 = 1.6$ and γ_3=0.67 for ASTM 615 Grade 60 reinforcement,

$$M_{cr} = \gamma_3 \cdot \gamma_1 \cdot \frac{f_r \cdot I_g}{y_t} = 0.67 \cdot 1.6 \cdot \frac{0.48 \cdot 1574640}{27.0 \cdot (12)} = 2501 \text{ kip-ft}$$

The capacity of the section must be $\geq$ the smaller of:

M_{cr} = 2501 kip-ft <u>GOVERNS</u>

or $1.33M_u = 1.33 \cdot 2205 = 2933$ kip – ft

The resisting moment is:

$$\phi M_n = \phi A_s f_y (d - a/2) = 0.9\ (12.70)\cdot(60)\cdot\left[40.10 - \frac{1.87}{2}\right]\cdot\frac{1}{12}$$

$= 2238$ kip-ft $<$ 2501 kip-ft NO GOOD

Revise reinforcement to 12-#10 bars spaced at 10 inches (A_s = 15.24 in^2) with standard hooks.

M_r = 2673 kip-ft > 2501 kip-ft OK

[5.7.2.2]
[5.7.3.2]

3. Design Footing Reinforcement Parallel to Pier For Factored Moments

Determine the required area of flexural reinforcement to satisfy the Strength I load combination for parallel moments. Four piles contribute to the design moment at the critical section for moment parallel to the pier.

Piles 1 and 3 have reaction of 167.3 kips and 123.7 kips respectively. The inner pile above the x_{par} axis was previously shown to have a reaction equal to 156.4 kips.

The pile reaction for the inner pile below the X_{par} axis is:

$$P = \frac{1455}{10} + \frac{763\cdot(-2.50)}{175.00} = 134.6 \text{ kips}$$

[5.13.3.6.1]

The inner piles lie partially inside of the critical section. Only the portion of the reaction outside the critical section causes moment at the critical section. See Figure 11.4.3.17.

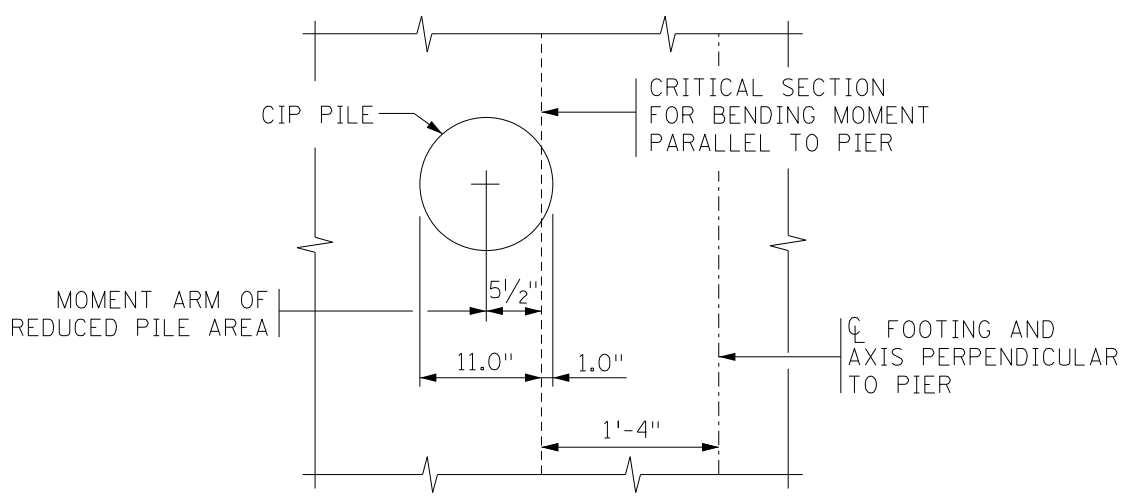

Figure 11.4.3.17
Partial Footing Plan

Then the design moment on the critical section is:

$$M_u = (167.3 + 123.7) \cdot \left(\frac{26}{12}\right) + (156.4 + 134.6) \cdot \left(\frac{11}{12}\right) \cdot \left(\frac{5.5}{12}\right) = 753 \text{ kip-ft}$$

Using the same "d" value of 40.10 inches as used for the perpendicular reinforcement, the required area of steel is 4.26 in^2. Try 13-#6 bars spaced at 12 inches. The provided area of steel is 5.72 in^2.

[5.5.4.2.1]

Again, confirm the initial assumption that ϕ=0.90

$$a = \frac{A_s \cdot f_y}{0.85 \cdot f'_c \cdot b} = \frac{5.72 \cdot 60}{0.85 \cdot 4.0 \cdot 156} = 0.65 \text{ in}$$

$$c = \frac{a}{\beta_1} = \frac{0.65}{0.85} = 0.76 \text{ in}$$

$$d_t = 54 - 12 - 1.27 - 0.5 \cdot 0.75 = 40.36$$

Concrete compression strain limit $\varepsilon_c = 0.003$

[5.7.2.1]
[Table C5.7.2.1-1]

Reinforcement tension-controlled strain limit $\varepsilon_{tl} = 0.005$

$$\varepsilon_t = (d - c)\left(\frac{\varepsilon_c}{c}\right) = (40.36 - 0.76)\left(\frac{0.003}{0.76}\right) = 0.156 > \varepsilon_{tl} = 0.005$$

Therefore, the initial assumption of ϕ = 0.90 is OK.

[5.7.3.4]

Crack Control

Crack control checks are not performed on footings.

[5.5.3]

Fatigue

By inspection, fatigue is not checked for footings.

[5.7.3.3.2]

Check Minimum Reinforcement

Revise the M_{cr} value computed earlier for a footing length of 13 feet:

[5.4.2.6]

$$M_{cr} = 2501 \cdot \frac{13}{10} = 3251 \text{ kip} - \text{ft}$$

The minimum required flexural resistance is the lesser of M_{cr} or:

$$1.33M_u = 1.33 \cdot 753 = 1001 \text{ kip-ft}$$ <u>GOVERNS</u>

The resisting moment is:

$$M_r = \phi A_s f_y (d - a/2) = 0.9\ (5.72)\cdot(60)\cdot\left[40.36 - \frac{0.65}{2}\right]\cdot\frac{1}{12}$$

$$= 1031 \text{ kip-ft} > 1001 \text{ kip-ft}$$ OK

Provide 13-#6 bars spaced at 12 inches (A_s = 5.72 in^2) with standard hooks.

[5.11.2.1.1]

4. Dowel Bar Development and Lap Splice

Determine the lap length for the primary column steel to dowel splice. All primary column steel bars are spliced at the same location, consequently the lap is a Class B splice. The primary column reinforcement consists of #8 epoxy coated bars. For ease of construction, the dowel circle will be detailed to the inside of the column bar circle. Accordingly, the dowels will be increased one size to #9 bars.

[5.11.2.1.1]

For the #9 dowels:

Clear cover d_{dowclr}= 2.00 + 0.50 + 1.00 = 3.50 in

Dowel circle diameter = $\pi \cdot [d_{col} - 2 \cdot (d_{dowclr} + 0.5 \cdot d_b)]$

$= \pi \cdot [36.00 - 2 \cdot (3.50 + 0.5 \cdot 1.128)] = 87.56$ in

Dowel bar spacing = $\frac{87.56}{12} = 7.30$ in

Dowel bar clear spacing = 7.30 – 1.128 = 6.17 in.

The basic development length ℓ_{db} for a #9 bar is:

$$\ell_{db} = \frac{2.4 \cdot d_b \cdot f_y}{\sqrt{f'_c}} = \frac{2.4 \cdot 1.128 \cdot 60}{\sqrt{4}} = 81.22 \text{ in}$$

The modification factors to the development length are:

λ_{rl} = 1.0 for vertical bars

λ = 1.0 for normal weight concrete

λ_{er} = 1.0 taken conservatively assuming $A_{sprovided} = A_{srequired}$

[5.11.2.1.2]

For determination of λ_{cf}:

The dowel bars are epoxy coated

$3 \cdot d_b$ = 3.38 in < dowel bar clear cover

$6 \cdot d_b$ = 6.77 in > dowel bar clear spacing

Then λ_{cf} = 1.5

[5.11.2.1.3]

For determination of λ_{rc}:

c_b = 3.70 in. (governed by 0.5 · bar spacing)

s = 3 in (spiral pitch)

n = 1 (spiral crosses splitting plane)
A_{tr} = 0.20 (area of #4 spiral bar)

Then $k_{tr} = \dfrac{40 \cdot A_{tr}}{s \cdot n} = \dfrac{40 \cdot 0.20}{3 \cdot 1} = 2.67$

$$\lambda_{rc} = \frac{d_b}{c_b + k_{tr}} = \frac{1.128}{3.70 + 2.67} = 0.18 < 0.4$$

So $\lambda_{rc} = 0.4$

Then the development length ℓ_d is:

$$\ell_d = \frac{\ell_{db} \cdot (\lambda_{rl} \cdot \lambda_{cf} \cdot \lambda_{rc} \cdot \lambda_{er})}{\lambda} = \frac{81.22 \cdot (1.0 \cdot 1.5 \cdot 0.4 \cdot 1.0)}{1.0} = 48.73 \text{ in.}$$

The lap length for a Class B tension splice is governed by the smaller bar size, in this case the #8 column bar. The projection of the #9 dowel will be governed by the greater of the development length of the #9 dowel and the Class B lap for the #8 column bar.

For the #8 column bars:

Clear cover d_{colclr}= 2.00 + 0.50 = 2.50 in

Column bar circle diameter = $\pi \cdot [d_{col} - 2 \cdot (d_{colclr} + 0.5 \cdot d_b)]$
= $\pi \cdot [36.00 - 2 \cdot (2.50 + 0.5 \cdot 1.00)]$
= 94.25 in

Column bar spacing = $\dfrac{94.25}{12} = 7.85$ in

Column bar clear spacing = 7.85 – 1.00 = 6.85 in

The basic development length ℓ_{db} for a #8 bar is:

$$\ell_{db} = \frac{2.4 \cdot d_b \cdot f_y}{\sqrt{f'_c}} = \frac{2.4 \cdot 1.00 \cdot 60}{\sqrt{4}} = 72.00 \text{ in}$$

The modification factors to the development length are:

λ_{rl} = 1.0 for vertical bars
λ = 1.0 for normal weight concrete
λ_{er} = 1.0 taken conservatively assuming $A_{sprovided} = A_{srequired}$

For determination of λ_{cf}:
The column bars are epoxy coated
$3d_b$ = 3.00 in > column bar clear cover
$6d_b$ = 6.00 in < column bar clear spacing
Then λ_{cf} = 1.5

For determination of λ_{rc}:

c_b = 3.00 in. (governed by clear cover + 0.5 · d_b)

s = 3 in (spiral pitch)

n = 1 (spiral crosses splitting plane)

A_{tr} = 0.20 (area of #4 spiral bar)

Then $k_{tr} = \dfrac{40 \cdot A_{tr}}{s \cdot n} = \dfrac{40 \cdot 0.20}{3 \cdot 1} = 2.67$

$$\lambda_{rc} = \frac{d_b}{c_b + k_{tr}} = \frac{1.00}{3.00 + 2.67} = 0.18 < 0.4$$

So λ_{rc} = 0.4

Then the development length ℓ_d is:

$$\ell_d = \frac{\ell_{db} \cdot (\lambda_{rl} \cdot \lambda_{cf} \cdot \lambda_{rc} \cdot \lambda_{er})}{\lambda} = \frac{72.00 \cdot (1.0 \cdot 1.5 \cdot 0.4 \cdot 1.0)}{1.0} = 43.20 \text{ in.}$$

The lap length for a Class B tension splice is:

[5.11.5.3.1]

$1.3 \cdot \ell_d = 1.3 \cdot 43.20 = 56.16$ in

The Class B lap length for a #8 bar governs over the development length of a #9 bar.

Specify a 4′-9″ lap length.

Dowel Bar Hook Development

Verify that adequate embedment is provided for the dowel bars in the footing.

[5.11.2.4.1]

The basic development length ℓ_{hb} for a #9 epoxy coated bar with a standard hook is:

$$\ell_{hb} = \frac{38.0 \cdot d_b \cdot f_y}{60.0 \cdot \lambda \cdot \sqrt{f'_c}} = \frac{38.0 \cdot 1.128 \cdot 60.0}{60.0 \cdot 1.0 \cdot \sqrt{4}} = 21.43 \text{ in}$$

Applicable development length modification factors are:

- λ_{rc} = 0.8 for side cover ≥ 2.5 inches and 90° hook extension cover ≥ 2.0 inches.
- λ_{cf} =1.2 for epoxy coated bars.

The development length ℓ_{dh} of the dowel with standard hook is:

$$\ell_{dh} = 21.43 \cdot 0.8 \cdot 1.2 = 20.57 \text{ in}$$

The embedment provided is:

$\ell_{prov} = 54 - 12 - 1.27 - 0.75 = 39.98$ in > 20.57 in <u>OK</u>

5. Summary

The footing reinforcement is illustrated in Figure 11.4.3.18.

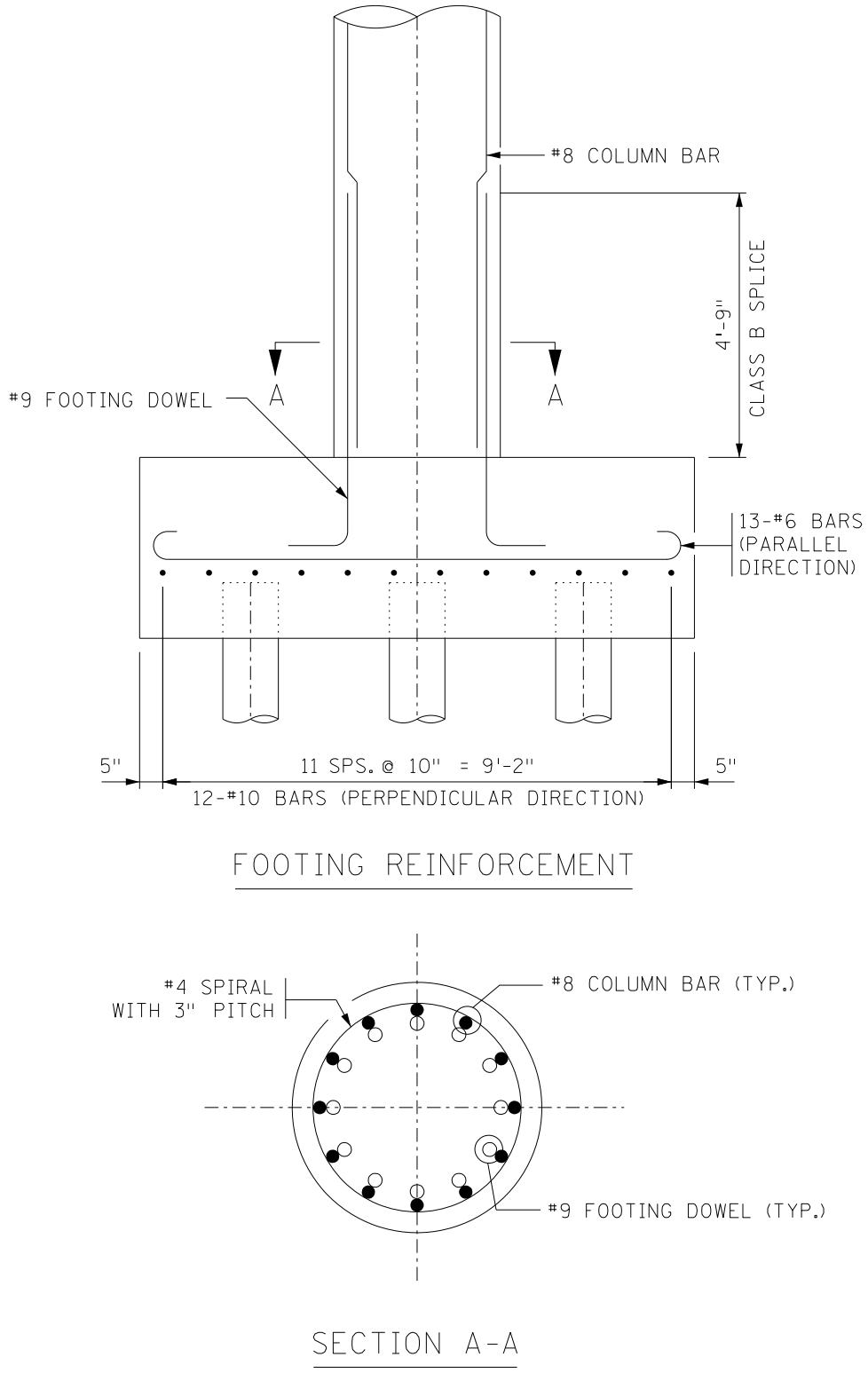

Figure 11.4.3.18

[This page intentionally left blank.]