Abutments

Karl Johnson
Bridge Designer

Overview

- Abutment description/selection
  - Integral
  - Semi-integral
  - Parapet
- Abutment design
- Wingwall design
- Barrier location
- End posts

Abutment selection

- Factors contributing to abutment selection
  - Bridge length
  - Bridge skew
  - Horizontal curves
  - Wingwall length
  - Presence of retaining wall which ties into wingwall
  - Front face abutment exposure
  - Beam depth/superstructure type
  - Desired joint location

Selection/description: Integral

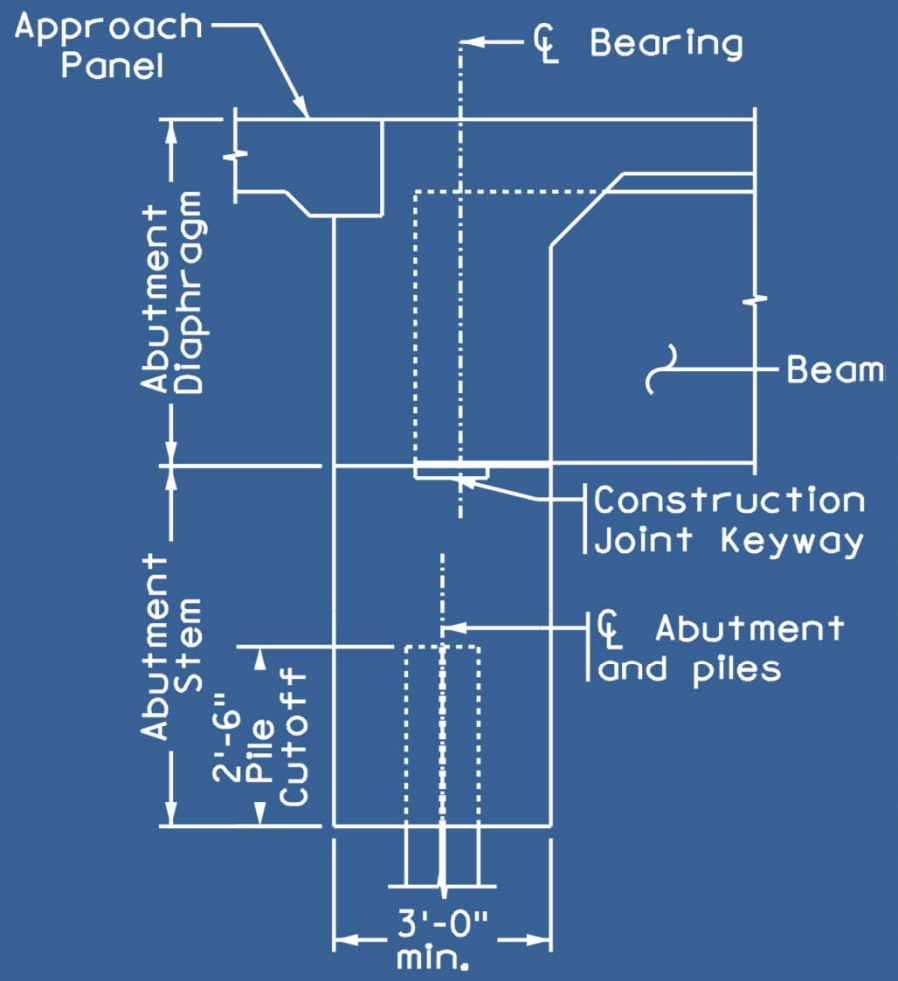

Selection: Integral

- Advantages
  - More cost effective
  - Simplified design
  - Jointless bridge
- Disadvantages
  - Geometric and load restrictions
  - Must be placed on piling

Integral abutment restrictions

- Length restrictions
  - Bridges under 300 ft long can have up to a 20 degree skew
  - Bridges under 100 ft long can have up to a 45 degree skew
  - Bridges between 100 and 300 ft can have skew up to: [45 degrees -0.125*(L-100)]

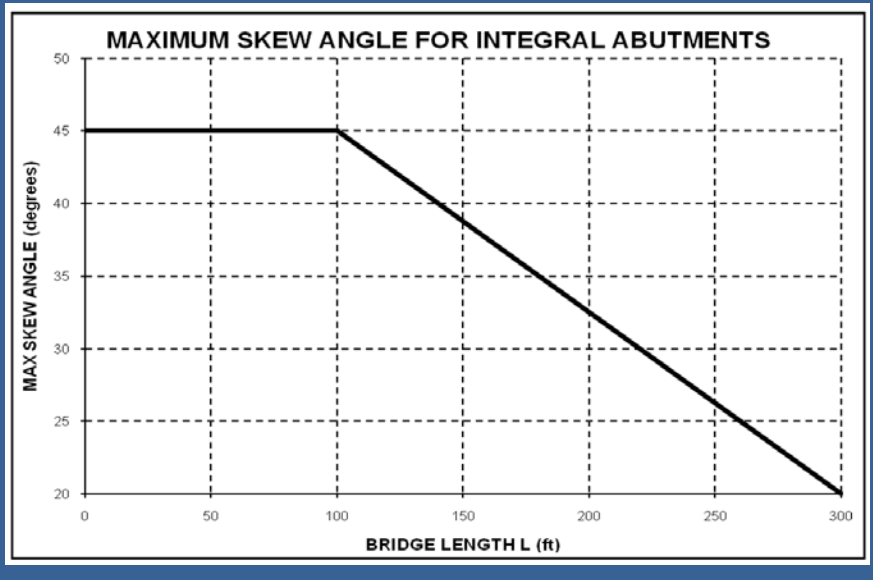

Integral abutment restrictions

- Requires a straight horizontal alignment (Slight curvature can be allowed on a case-by-case basis)
- Length of wingwall cantilevers are ≤ 14 ft
- Wingwalls do not tie into roadway retaining walls
- Minimum front face exposure should be set at 2’-0”
- Depth of beams must be ≤ 72 inches

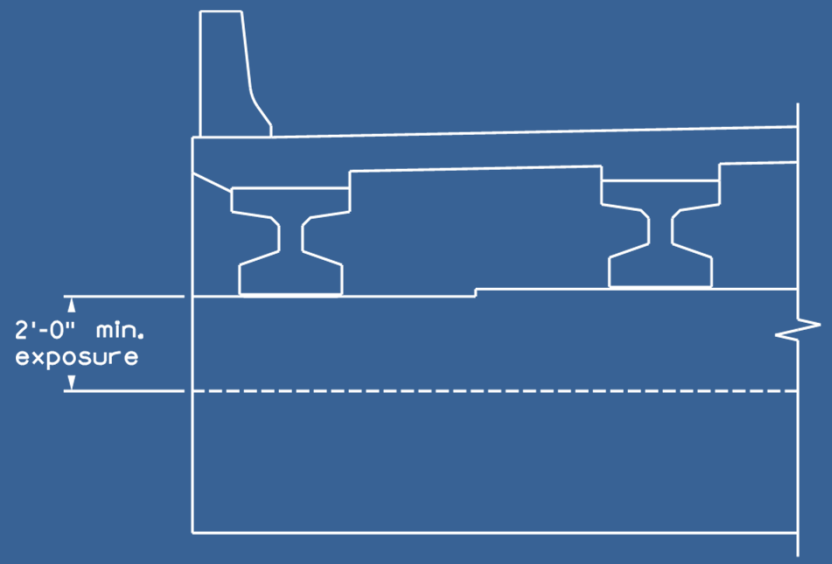

Selection/description: Semi-integral

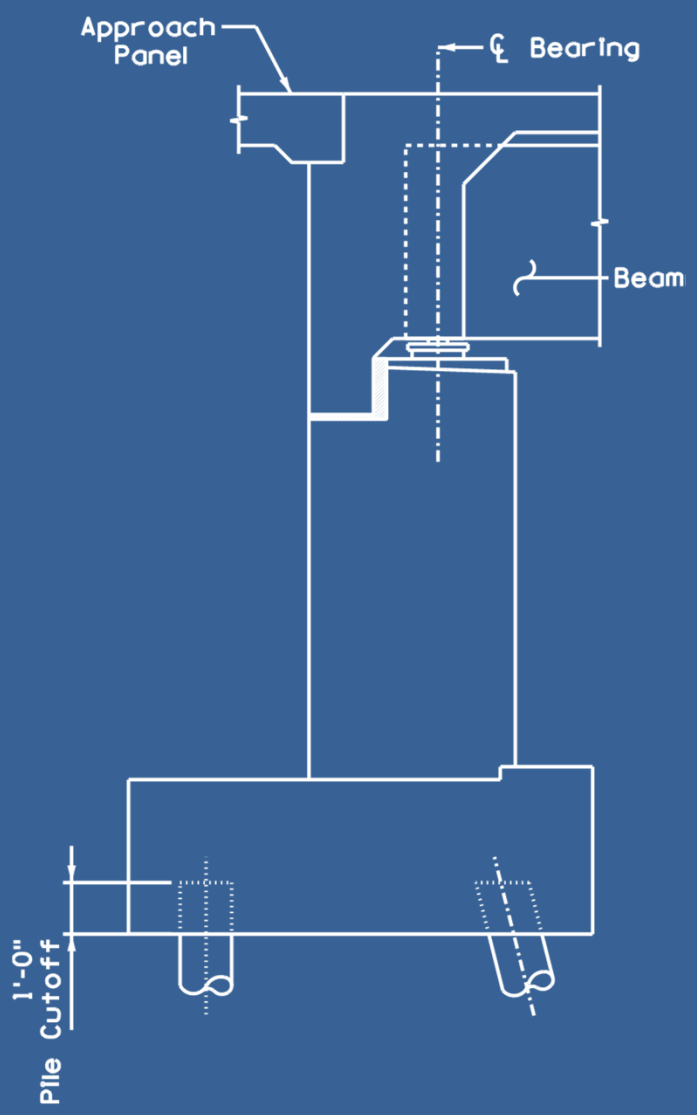

Selection: Semi-integral

- Advantages
  - Can be placed on piling or spread footings
  - Some (not all) restrictions from integral abutments can be neglected
    - No wingwall length limit
    - No front face exposure height limit
    - No superstructure depth limit
  - Jointless Bridge
- Disadvantages
  - More complicated design in comparison to integral abutments
  - Must still meet all bridge length, skew, and horizontal alignment criteria from integral abutments

Selection/description: Parapet

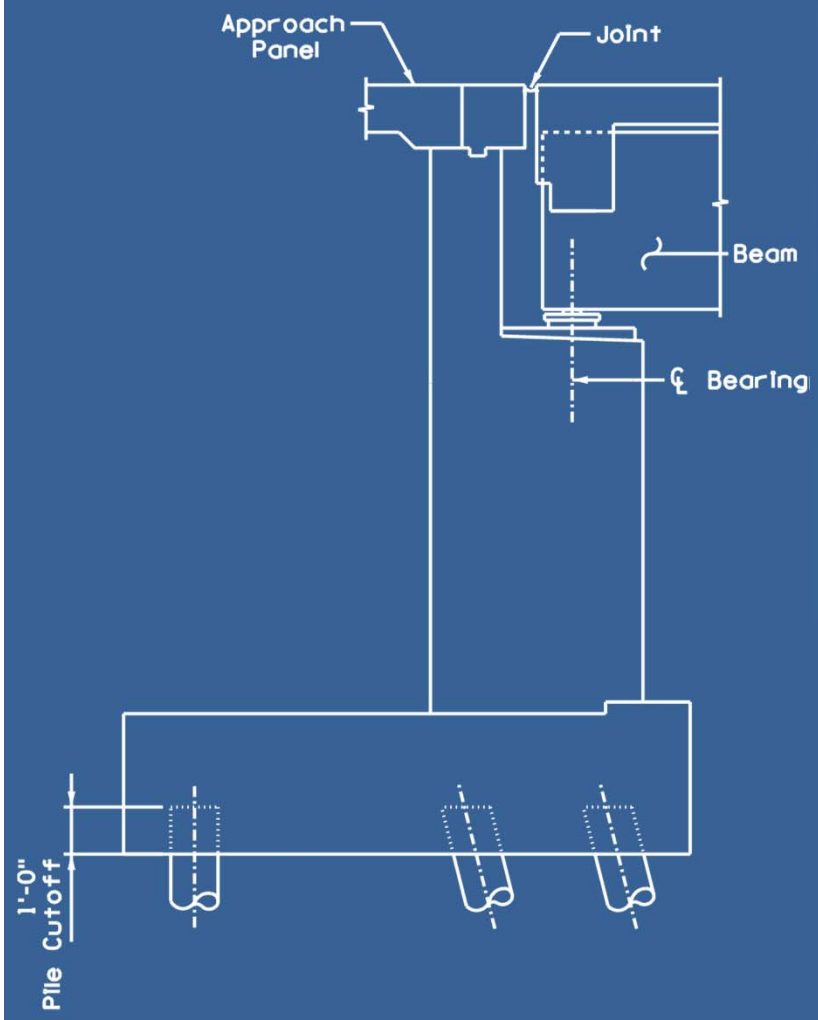

Selection: Parapet

- Advantages
  - Works for wide variety of applications
  - No more length or curvature restrictions
- Disadvantages
  - Expansion joints are on the bridge over the bearings
    - Creates higher maintenance costs

Design: Integral

- Piles are designed for axial load only
- Follow the "Integral Abutment Reinforcement Design Guide" found in Chapter 11 of the MnDOT LRFD Bridge Design Manual
- Additional requirements for using the "Integral Abutment Reinforcement Design Guide"
  - Beam spacing ≤ 13'-0"
  - Pile spacing ≤ 11'-0"
  - Pile capacity $\phi R_n \leq 165$ tons
  - Max abutment stem height ≤ 7'-0"
  - Deck thickness plus stool height ≤ 15.5"

Design: Integral

Table 11.1.1.1 Abutment Stem Vertical Dowels (A_04E) Minimum Required Bar Size and Length

Beam Size (in)	Bar Size & Max Spacing	Bar Length
14	#16 @ 12″	*
18	#19 @ 12″	*
22	#19 @ 12″	*
27	#19 @ 12″	5′-6″
36	#22 @ 12″	6′-3″
45	#22 @ 12″	7′-0″
54	#19 @ 6″	7′-6″
63	#19 @ 6″	7′-6″
72	#19 @ 6″	7′-6″

* Hook bar around uppermost B.F. horizontal bar in diaphragm

Table 11.1.1.2 Abutment Diaphragm Horizontal Bars (S1902E & S1903E) Minimum Required Number of #19 Bars, Each Face

Beam Size (in)	Beam Spacing (ft)				
	≤ 9	10	11	12	13
14	2	2	2	2	2
18	2	2	2	2	2
22	2	2	2	2	2
27	3	3	3	3	3
36	3	3	3	3	4
45	4	4	4	4	5
54	5	5	5	5	6
63	6	6	6	7	7
72	7	7	7	8	9

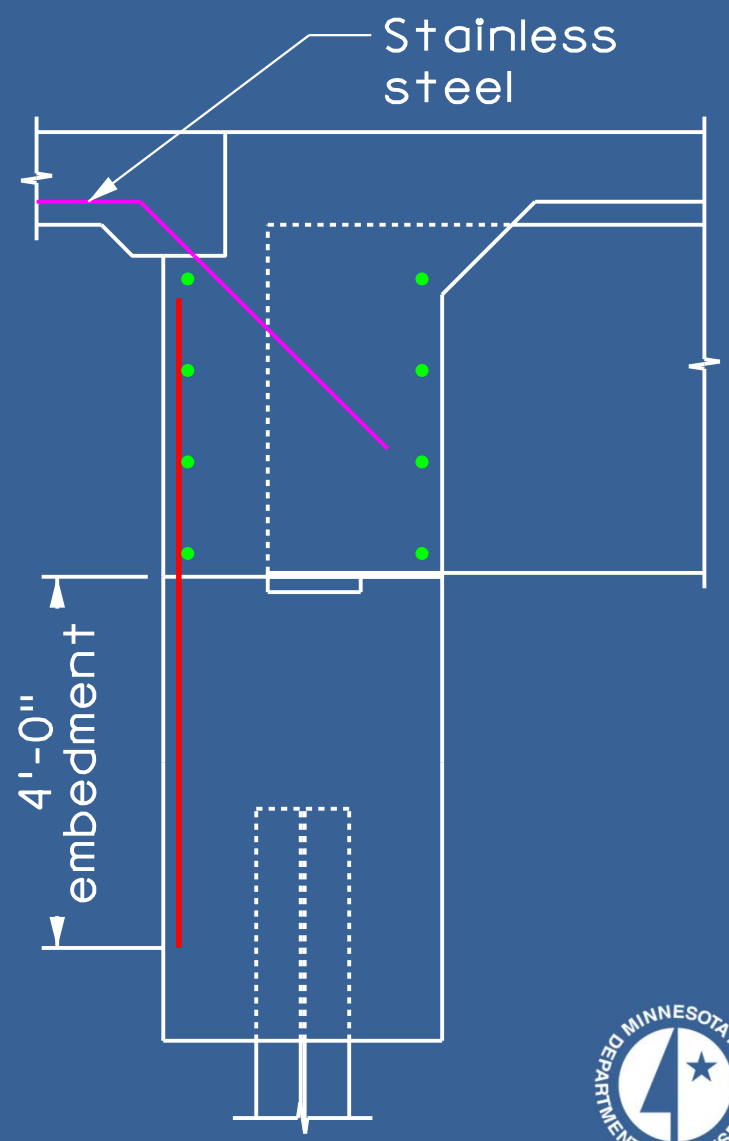

Design: Integral

- Can also perform specific design for abutments that do not meet "Integral Abutment Reinforcement Design Guide"
  - Use passive soil pressure that develops when bridge expands for special design
  - Back face dowels

  - Diaphragm horizontals

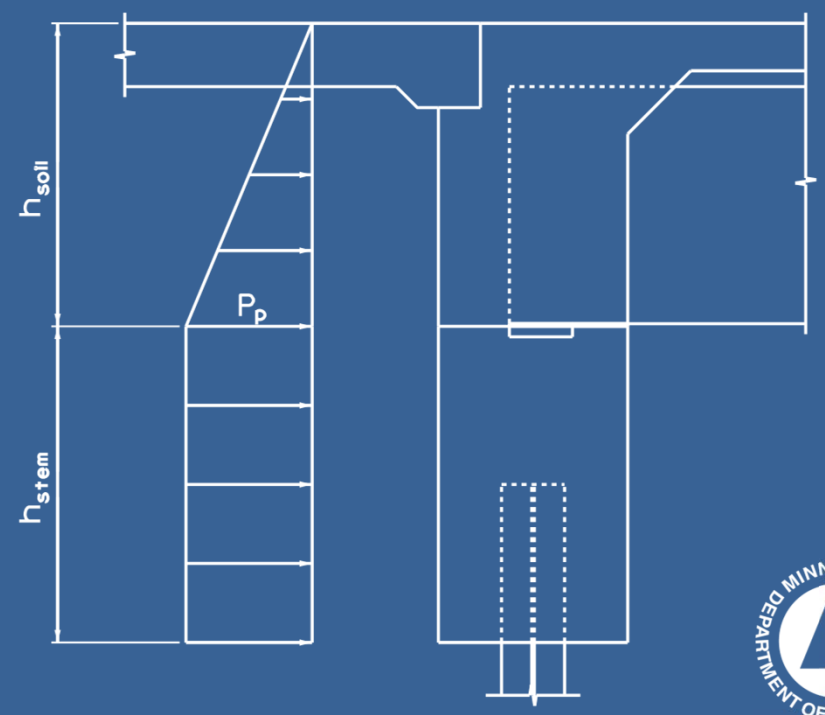

Design: Semi-integral

- Skews greater than 30 degrees require a guide lug to reduce unwanted lateral movement
- Minimum stem thickness of 4’-0”
- Provide a 3” minimum horizontal gap between the diaphragm lug and the stem

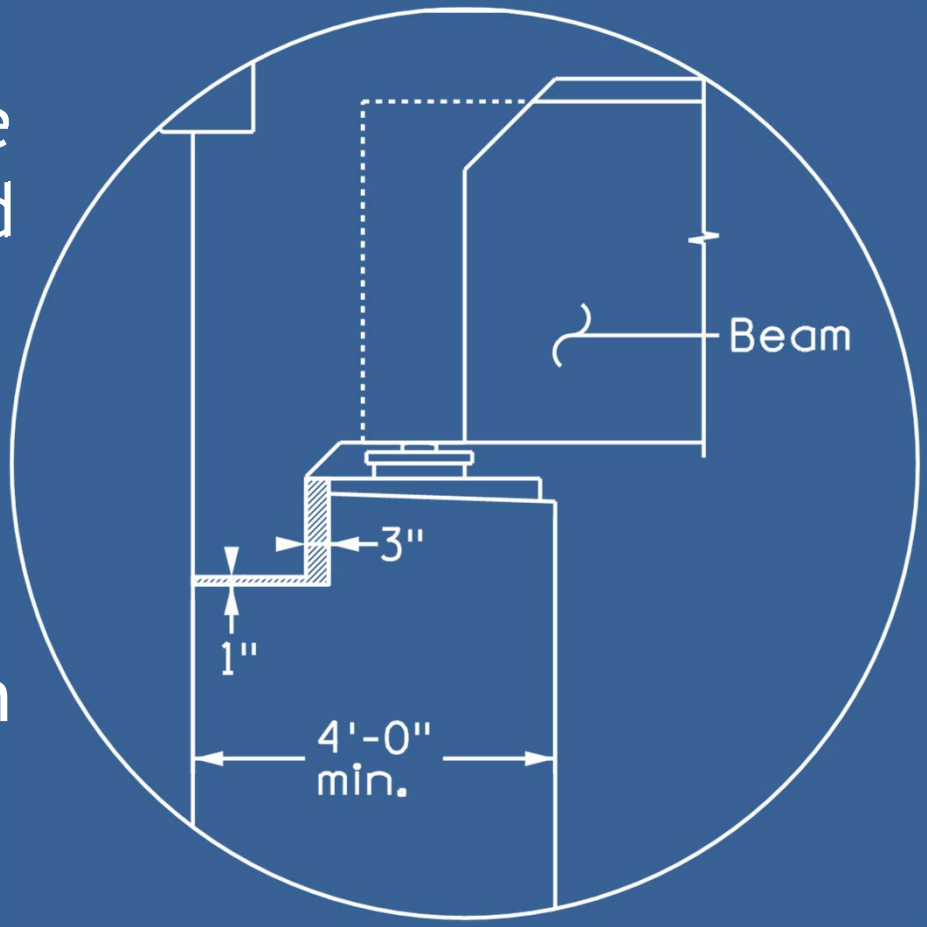

Design: Semi-integral

- Use pedestals and sloped bridge seat
- Requires a detailed bearing design in contrast to ½” elastomeric pad for integral abutments
  - Typically a curved plate bearing assembly is used

Fixed

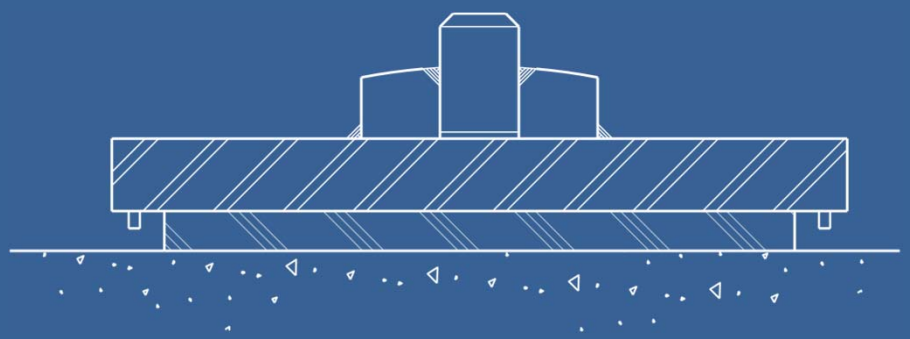

Expansion

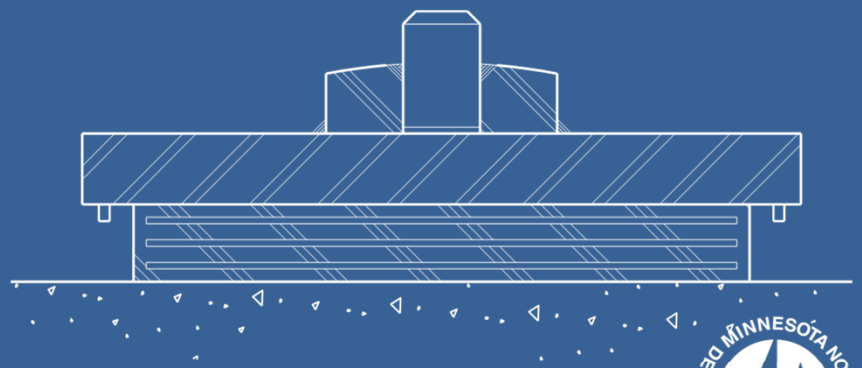

Design: Semi-integral

Construction Case 1A

- Stem has been constructed and backfilled but superstructure is not in place

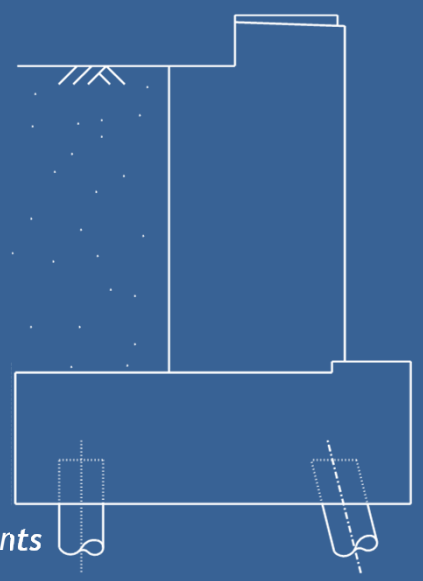

Construction Case 1B

- Abutment stem and superstructure have been constructed and backfilled

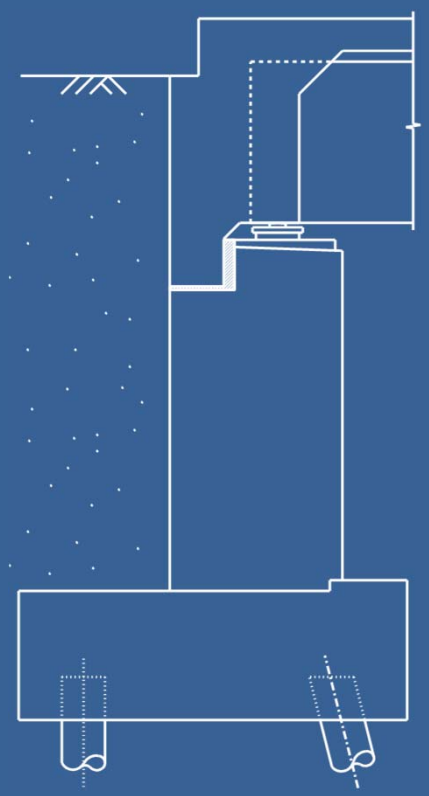

Design: Semi-integral

- Designed bars
  - Diaphragm horizontal
  - Back face vertical stem
  - Footing
- Standard bars
  - Front face stem
  - Diaphragm lug stirrup and horizontal

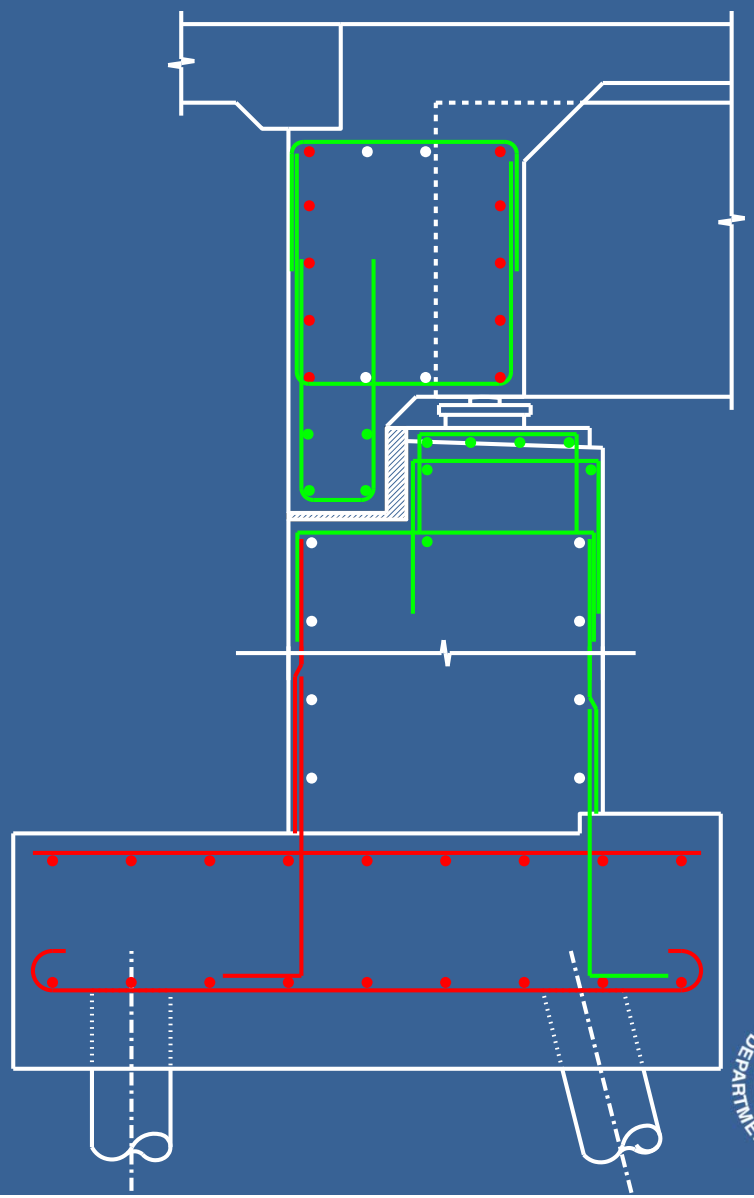

Design: Parapet

- Low parapet abutment
  - Total height (including footing) ≤ 15 feet
  - Use a contraction joint every 32 feet
  - Typical abutment has standard reinforcement bars found in the MnDOT manual

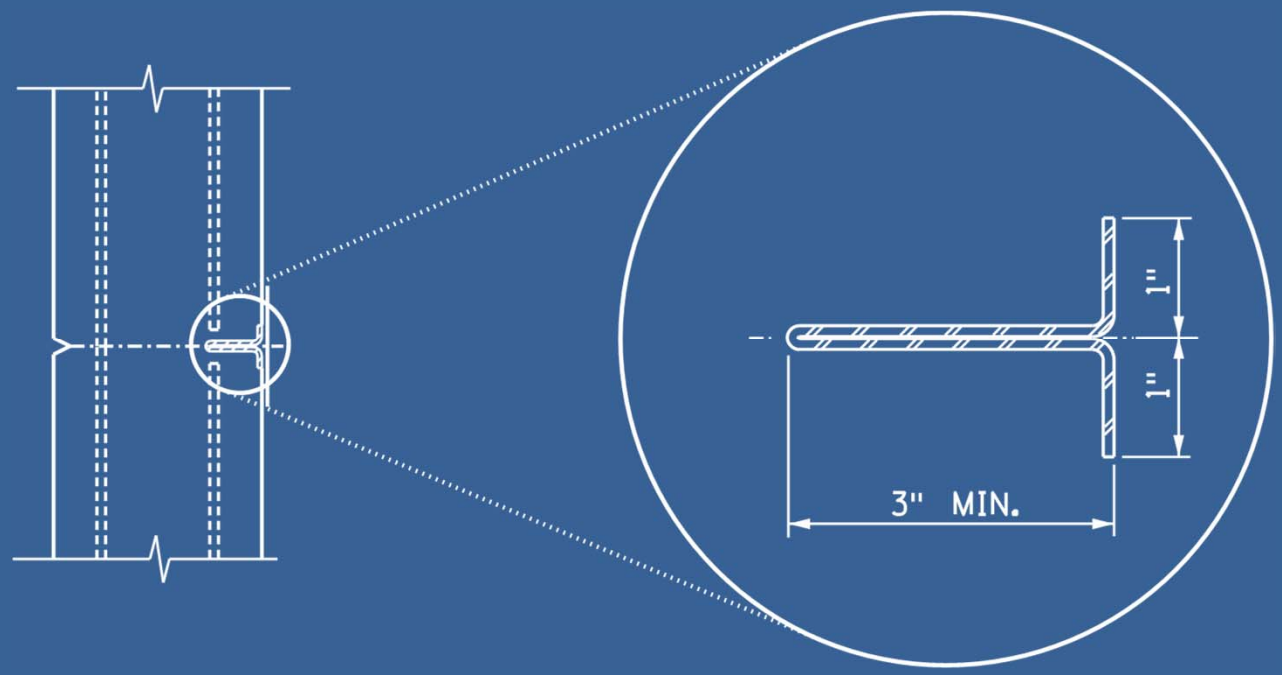

Design: Parapet

- High parapet abutment
  - Total height (including footing) > 15 feet
  - Use a construction joint (w/keyways) every 32 feet
  - Reinforcement bars designed by engineer
  - When abutments are higher than 40 feet MSE walls may be considered

Wingwalls

Integral

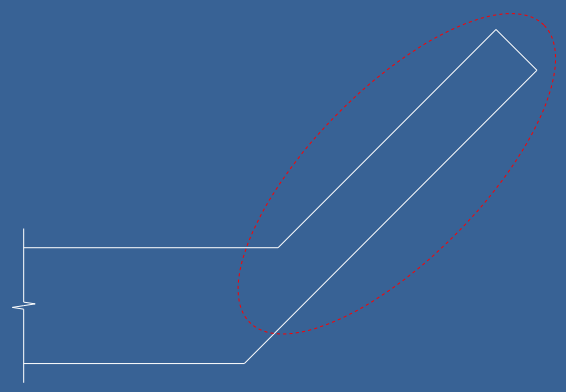

Semi-integral/Parapet

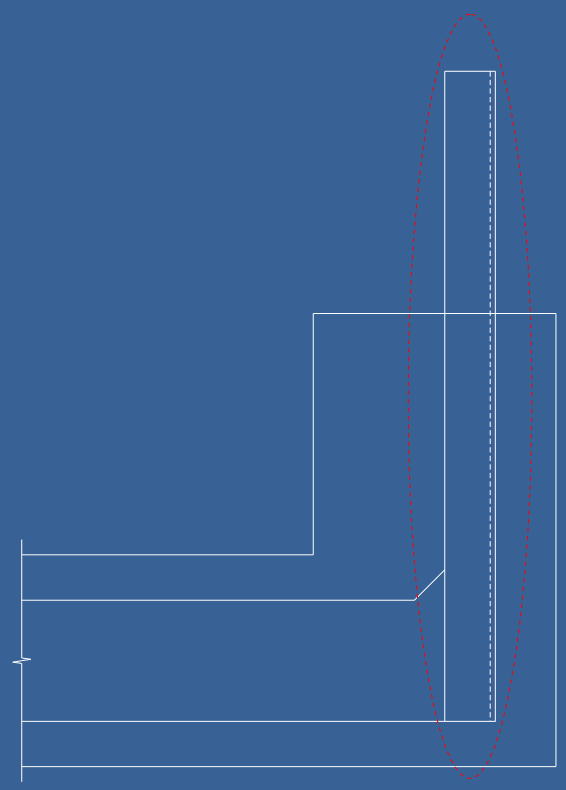

Wingwall design: Integral

- Refer to section 11.1.4 of the MnDOT LRFD Bridge Design Manual for wingwall design
- Wingwall thickness should be 1’-6”
- Back face horizontal reinforcement should be # 16’s at 12” for wingwalls ≤ 8’-0”
  - Consider possible restrictions
- Wingwalls between the lengths of 8’-0” and 14’-0” will need a special design
  - The back face horizontal reinforcement should be designed to resist passive soil pressure

Wingwall design: Layout options

- One footing
  - Preferred option for laying out wingwall geometry
  - Maximum cantilever beyond footing is 12’-0”

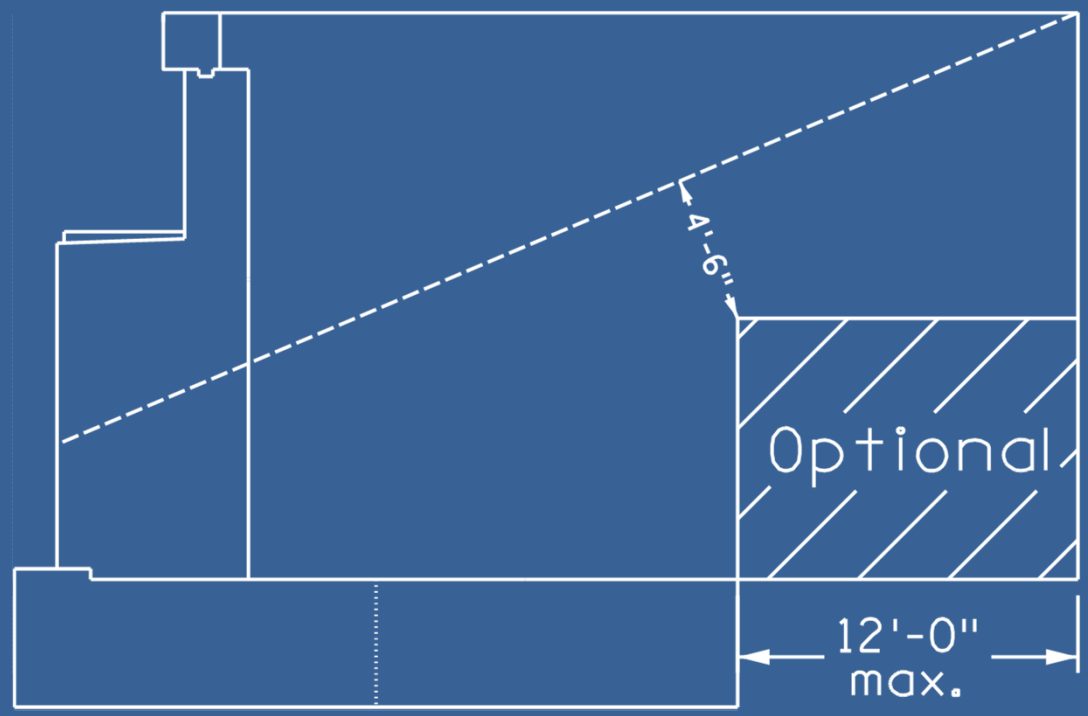

Wingwall design: Layout options

- Separate footing
  - Separate footings may be required for wingwalls over 20’-0”
  - Not recommended for spread footings
  - Must have a 1V:1.5H slope or shallower between footings
  - Limit cantilever beyond the footing to 6’-0”

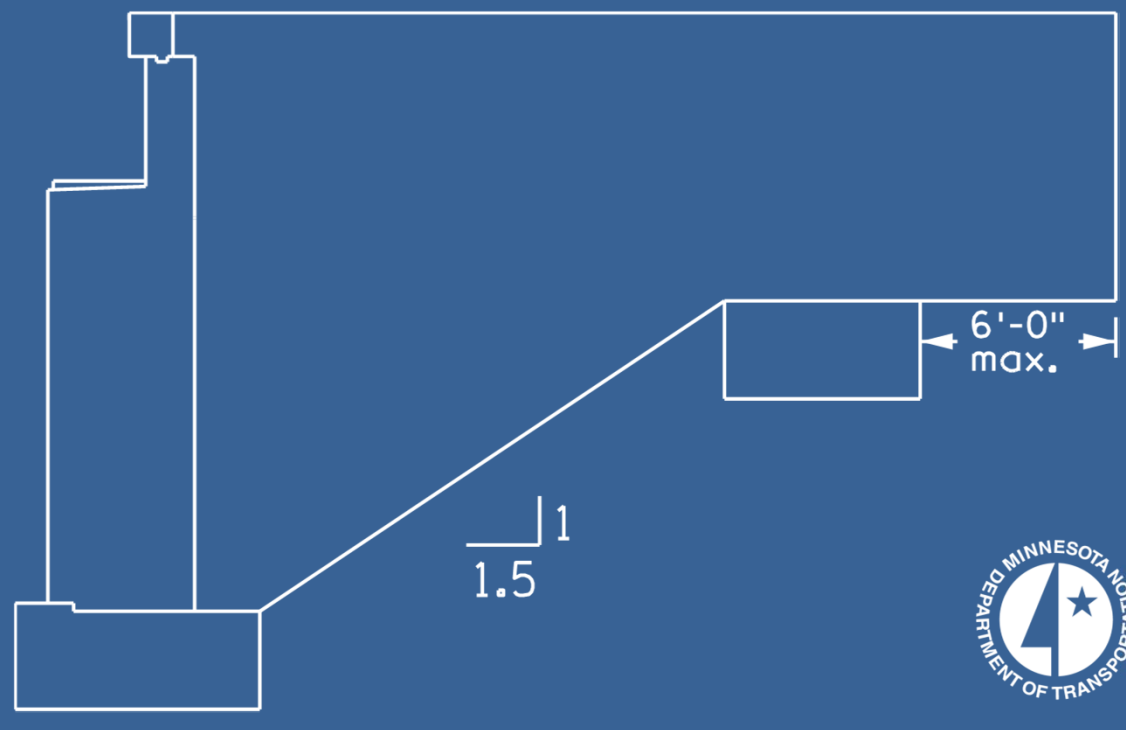

Wingwall design: Layout options

- Stepped footing
  - Follow maximum step heights set forth by retaining wall standards
  - Not recommended for piled foundations
  - Can delay the contractor significantly

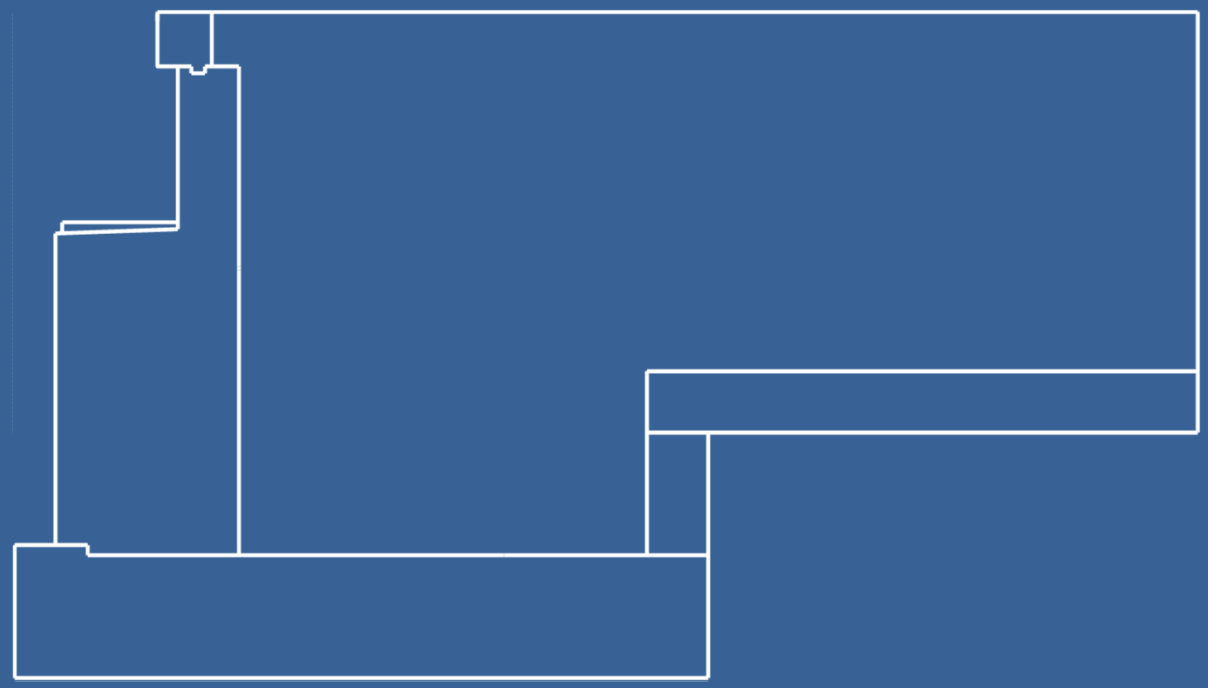

Wingwall design: Semi-integral/Parapet

- Assume back face vertical dowels and reinforcement take the entire moment caused by horizontal loads
- Provide a concrete fillet at wingwall/stem connection
- Cantilevers under 8’-0” can use a standard reinforcement design
- Provide wingwall pile loads in the plan if they are less than 80% of main abutment pile loads

Wingwall design: Semi-integral/Parapet

- Rebar design consideration areas due to plate action
  - Stem/wingwall horizontal reinforcement
  - Footing/wingwall vertical reinforcement
  - Center of the wingwall
  - Cantilevered section

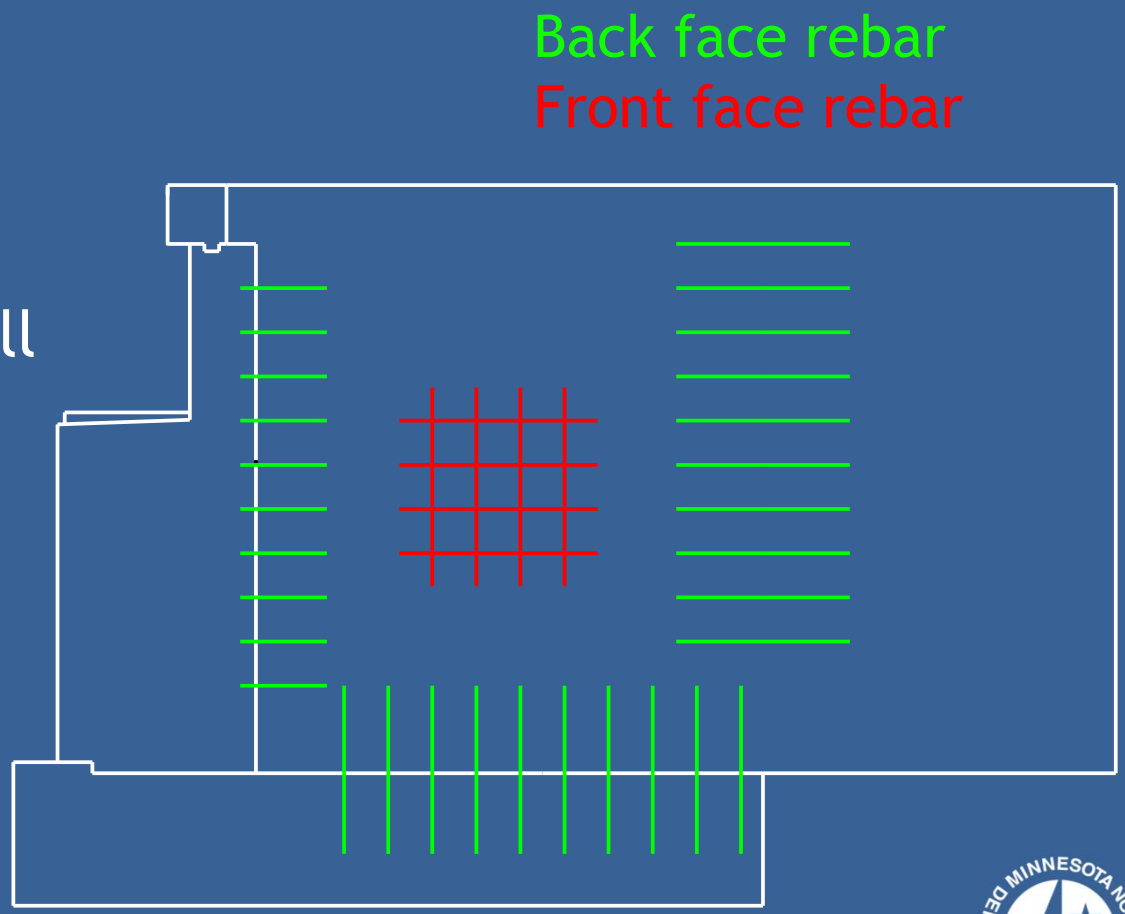

Wingwall design: Semi-integral/Parapet

- Many resources available for determining moments and shears for plate action
  - United States Department of the Interior
    - Bureau of Reclamation
  - Portland Cement Association

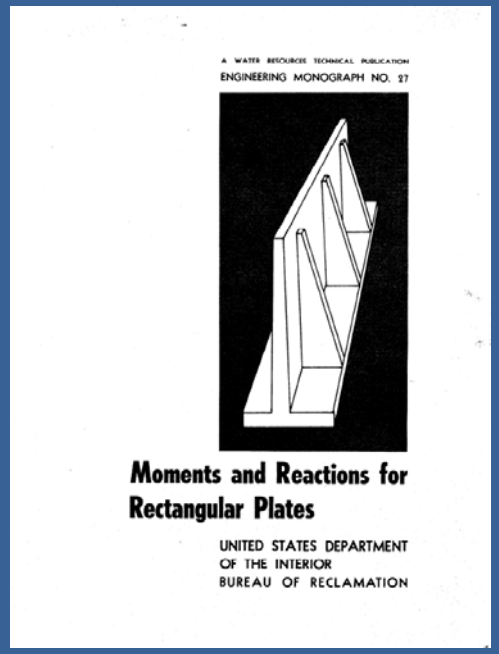

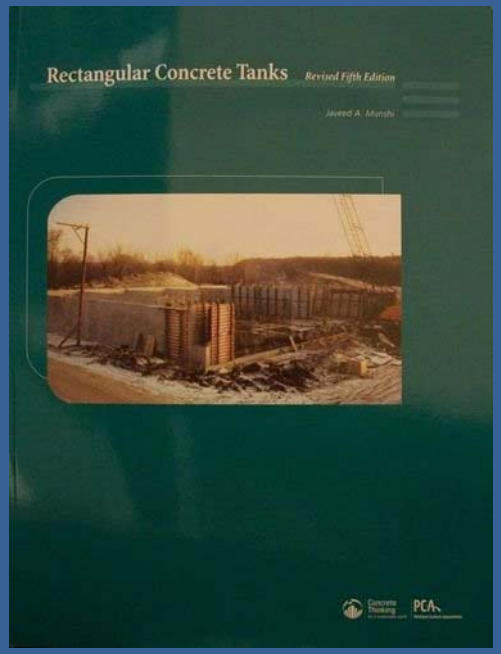

Barrier location

- The barrier should typically be located on the approach panel
- One exception is when wingwalls tie into retaining walls
  - Then coordination is necessary during the preliminary design process with roadway design to determine the barrier's correct location
- Barrier should extend 7'-0" onto the approach panel (previously 5'-0") for TL-4 barriers

Barrier location

Typical location

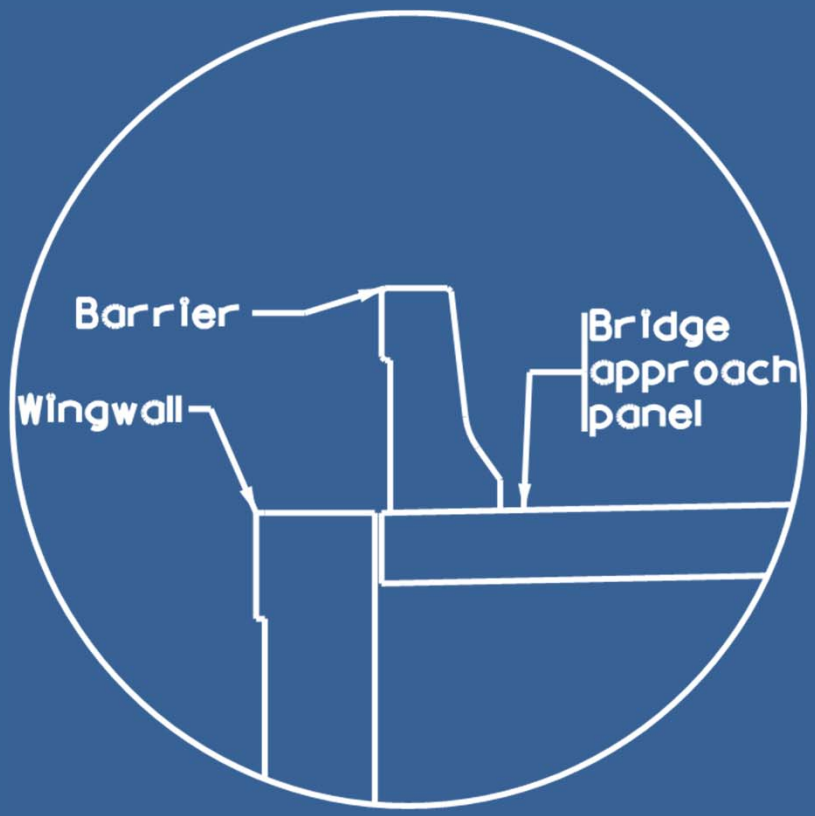

When wingwall ties into retaining wall

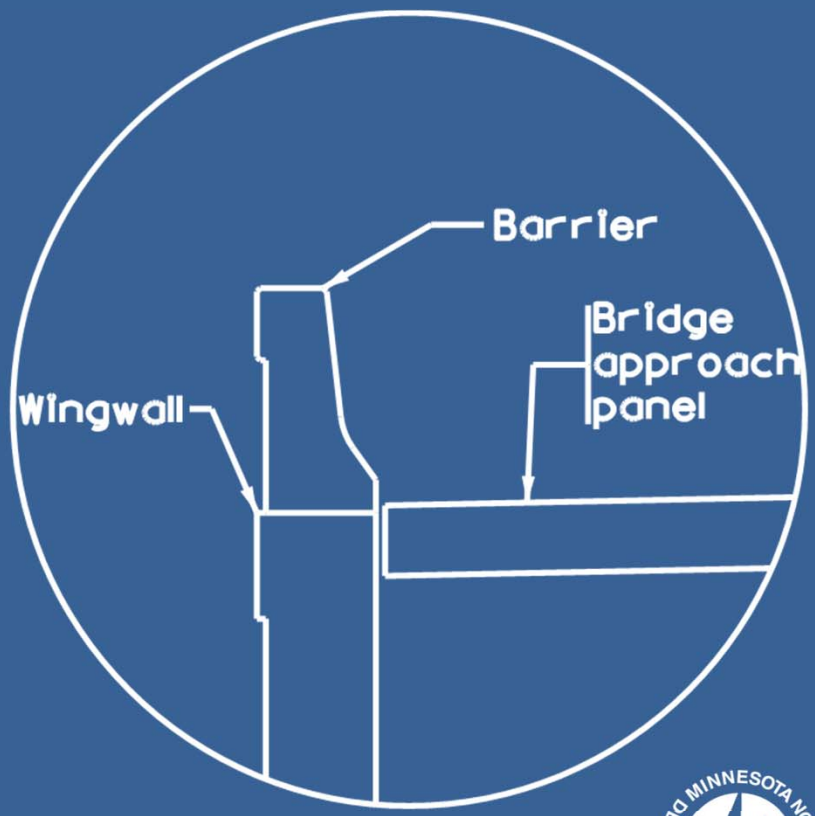

End posts

- MnDOT is no longer allowing the use of free standing end posts because we could not find sufficient crash testing data

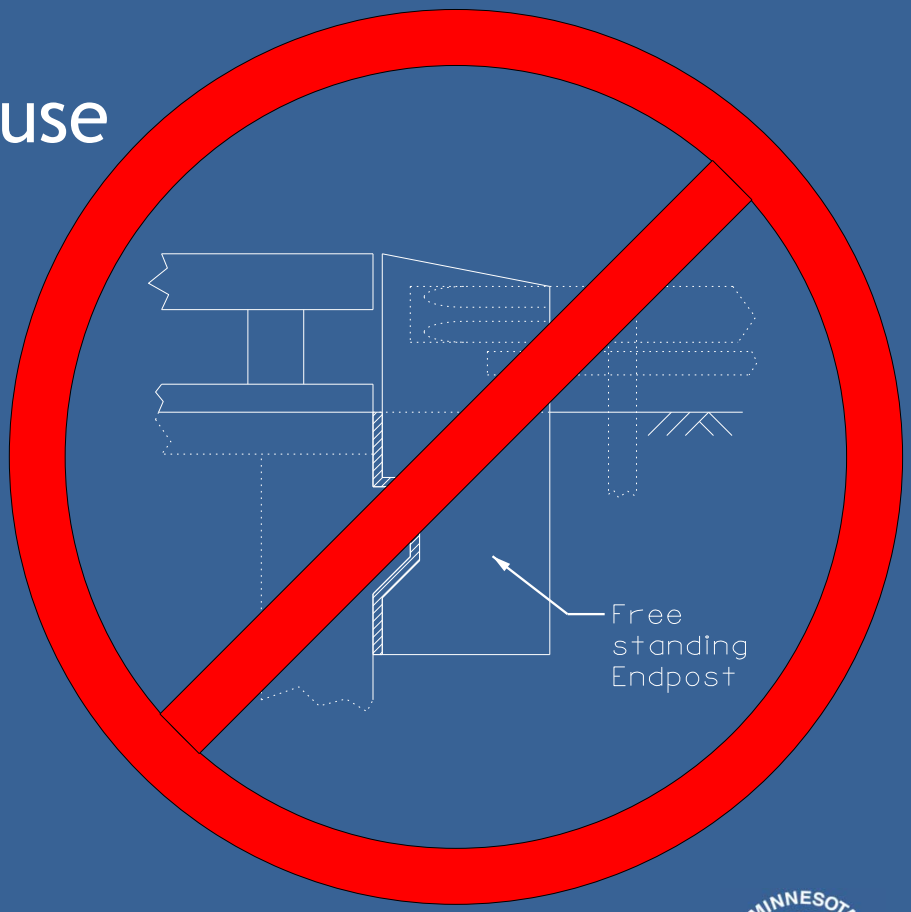

End posts

- Typically end posts are connected to the abutment
  - 3’-0” minimum length required
  - Width and reinforcement should be matched to adjoining rail
  - Reinforcement running through abutment-end post interface

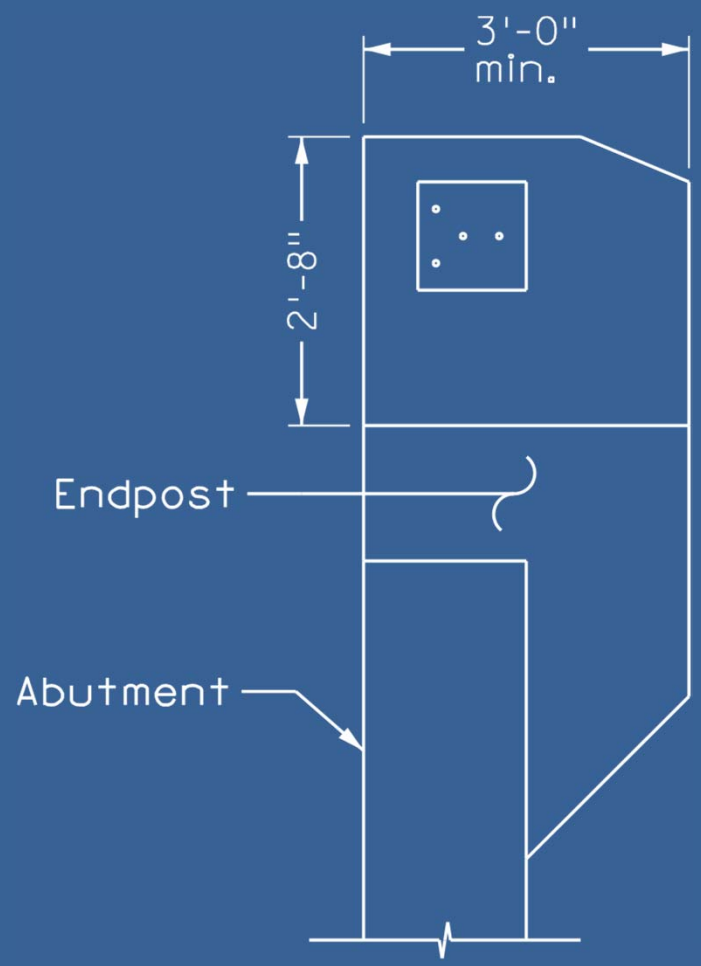

Questions?