Kennedy Bridge Planning Study

Technical Memorandum:

Bridge Rehabilitation Alternatives

MnDOT S.P. No. 6018-02

Prepared for:

Minnesota Department of Transportation

DRAFT

April 28, 2014

Prepared by:

CH2MHILL

Report Purpose:
This Memorandum presents a technical assessment of rehabilitation including historic background, condition description, alternatives and preliminary cost estimates.

Contents

Acronyms and Abbreviations ..... **vi**

Executive Summary ..... **vii**

1 Project Purpose and Need **1-1**
1.1 Project Purpose 1-1
1.2 Summary of Project Purpose and Need 1-1
1.3 Basis of Study 1-1

2 Bridge Background and Significance **2-1**
2.1 Historical Background 2-1
2.2 National Register Eligibility 2-2

3 Bridge Description and Character-Defining Features **3-1**
3.1 Geometrics and Bridge Configuration 3-1
3.2 Character-Defining Features 3-4
3.3 Other Historic Properties 3-4
3.3.1 St. Michael's Hospital and Nurses' Residence 3-4
3.3.2 Riverside Neighborhood Historic District 3-4
3.3.3 R. S. Blome Granitoid Pavement, Lewis Blvd. Segment 3-4
3.3.4 Archaeological Properties 3-5

4 Condition Description of the Bridge **4-1**
4.1 Overall Condition 4-1
4.2 Deck, Joints, and Railing Condition 4-1
4.3 Superstructure Condition 4-2
4.4 Substructure Condition 4-2
4.4.1 Abutments 4-3
4.4.2 Approach Bents 4-3
4.4.3 Truss Piers 4-3
4.5 Waterway Condition 4-4

5 Rehabilitation Components **5-1**
5.1 Abutment Bearings 5-1
5.2 Approach Span Pin and Hanger Detail 5-2
5.3 Approach Span Bent Columns 5-3
5.4 Pier 6 5-4
5.4.1 Pier Underpinning Option 5-4
5.4.2 Pier Replacement Option 5-6
5.5 Truss Corrosion Protection 5-7
5.6 Deck Replacement 5-7
5.7 Addition of Shared-Use Path 5-10
5.7.1 Background and Design Guidance 5-10
5.7.2 Internal Bicycle/Pedestrian Accommodation (Inside Truss) 5-11
5.7.3 External Bicycle/Pedestrian Accommodation (Outside Truss) 5-12
5.8 Additional Considerations 5-13
5.9 T-1 Steel 5-16

6 Rehabilitation Alternatives **6-1**
6.1 Rehabilitation Alternative 1—Minimal Rehabilitation 6-1
6.1.1 Underpin Pier 6 6-1

6.1.2 Truss Corrosion Protection 6-1
6.1.3 Approach Span Bent Columns 6-2
6.1.4 Abutment Bearings 6-2
6.1.5 Deck Rehabilitation 6-2
6.2 Rehabilitation Alternative 2A—Moderate Rehabilitation 6-2
6.2.1 Replace Pier 6 6-2
6.2.2 Truss Corrosion Protection 6-3
6.2.3 Approach Span Bent Columns 6-3
6.2.4 Abutment Bearings 6-3
6.2.5 Pin and Hanger Replacement 6-4
6.2.6 Deck Replacement 6-4
6.3 Rehabilitation Alternative 2B—Addition of Shared-Use Path Outside Truss 6-4
6.3.1 Replace Pier 6 6-4
6.3.2 Truss Corrosion Protection 6-4
6.3.3 Approach Span Bent Columns 6-5
6.3.4 Abutment Bearings 6-5
6.3.5 Pin and Hanger Replacement 6-5
6.3.6 Deck Replacement 6-5
6.3.7 Shared-Use Path 6-5
6.4 Rehabilitation Alternative 2C—Addition of Shared-Use Path Inside Truss 6-5
6.4.1 Replace Pier 6 6-6
6.4.2 Truss Corrosion Protection 6-6
6.4.3 Approach Span Bent Columns 6-6
6.4.4 Abutment Bearings 6-6
6.4.5 Pin and Hanger Replacement 6-6
6.4.6 Deck Replacement 6-6
6.4.7 Shared-Use Path 6-6

7 Evaluation of Alternatives 7-1
7.1 Evaluation Criteria 7-1
7.1.1 Primary Needs Addressed 7-1
7.1.2 Level of Service for Traffic 7-1
7.1.3 Bike/Pedestrian Accommodation and Safety 7-1
7.1.4 Construction Impact on Traffic 7-1
7.1.5 Future Maintenance and Inspection 7-1
7.1.6 Risk of Section 106 Adverse Effect 7-1
7.1.7 Construction Cost 7-2
7.2 Rehabilitation Alternative 1—Minimal Rehabilitation 7-2
7.2.1 Primary Needs Addressed 7-2
7.2.2 Level of Service for Traffic 7-2
7.2.3 Bike/Pedestrian Accommodation and Safety 7-2
7.2.4 Construction Impact on Traffic 7-2
7.2.5 Future Maintenance and Inspection 7-2
7.2.6 Risk of Section 106 Adverse Effect 7-2
7.2.7 Construction Cost 7-2
7.3 Rehabilitation Alternative 2A—Moderate Rehabilitation 7-2
7.3.1 Primary Needs Addressed 7-2
7.3.2 Level of Service for Traffic 7-2
7.3.3 Bike/Pedestrian Accommodation and Safety 7-2
7.3.4 Construction Impact on Traffic 7-3
7.3.5 Future Maintenance and Inspection 7-3
7.3.6 Risk of Section 106 Adverse Effect 7-3

7.3.7 Construction Cost 7-3
7.4 Rehabilitation Alternative 2B—Addition of Shared-Use Path Outside Truss 7-3
7.4.1 Primary Needs Addressed 7-3
7.4.2 Level of Service for Traffic 7-3
7.4.3 Bike/Pedestrian Accommodation and Safety 7-3
7.4.4 Construction Impact on Traffic 7-3
7.4.5 Future Maintenance and Inspection 7-3
7.4.6 Risk of Section 106 Adverse Effect 7-3
7.4.7 Construction Cost 7-3
7.5 Rehabilitation Alternative 2C—Addition of Shared-Use Path Inside Truss 7-4
7.5.1 Primary Needs Addressed 7-4
7.5.2 Level of Service for Traffic 7-4
7.5.3 Bike/Pedestrian Accommodation and Safety 7-4
7.5.4 Construction Impact on Traffic 7-4
7.5.5 Future Maintenance and Inspection 7-4
7.5.6 Risk of Section 106 Adverse Effect 7-4
7.5.7 Construction Cost 7-4

8 Performance Monitoring 8-1
8.1 Approach Bent Movement 8-1
8.1.1 Current Practice 8-1
8.1.2 Recommendations 8-1
8.2 Piers 6, 7, and 8 Movement 8-2
8.2.1 Current Practice 8-2
8.2.2 Recommendations 8-2
8.3 Deformation of Piles at Pier 6 8-2
8.3.1 Current Practice 8-2
8.3.2 Recommendations 8-2
8.4 Steel Cracks 8-3
8.4.1 Current Practice 8-3
8.4.2 Recommendations 8-3

9 Summary 9-1

10 References 10-1

Appendices

A. Existing Bridge Plans
B. Bridge Inspection Reports
C. Bridge Inventory Sheets

List of Tables

7-1 Rehabilitation Alternatives Preliminary Cost Estimate 7-5
7-2 Description and Evaluation of Rehabilitation Alternatives 7-6

List of Figures

1-1 Project Location Map 1-2
1-2 Aerial Photo 1-3
3-1 Bridge Layout 3-1
3-2 Bridge Cross Sections 3-2
3-3 Pin and Hanger 3-3
3-4 Vertical Pin 3-3

4-1 Tilted Bent 4-3
5-1 Abutment Bearing 5-1
5-2 Abutment Restrainer 5-2
5-3 Pin and Hanger Replacement 5-3
5-4 Approach Bent Adjustment 5-4
5-5 Underpinning Pier 6 5-5
5-6 Pier 6 Replacement 5-6
5-7 Replacement Railing Options 5-9
5-8 Bike Path Alternative Cross Sections 5-11
5-9 Cross Section of Separated Bicycle/Pedestrian Path (Trail) at Approach Spans 5-12
5-10 Cross Section of Separated and Attached Bicycle/Pedestrian Path (Trail) at Truss Spans 5-12
5-11 3D Model Perspective of Bicycle/Pedestrian Structure Attached to Truss Spans 5-13
5-12 Non-Redundant Members 5-14
5-13 Potential Added Load Path Redundancy 5-15

List of Exhibits

2-1 Historic Properties 2-3
5-1 Preliminary External/Separated Trail Layout 5-17

Acronyms and Abbreviations

AASHTO	American Association of State Highway and Transportation Officials
FHWA	Federal Highway Administration
GF/EGF MPO	Grand Forks—East Grand Forks Metropolitan Planning Organization
MnDOT	Minnesota Department of Transportation
MT	magnetic particle testing
NAVD	North American Vertical Datum
NBI	National Bridge Inventory
NGVD	National Geodetic Vertical Datum
NDDOT	North Dakota Department of Transportation
NRHP	National Register of Historic Places
PA	Programmatic Agreement
TL	Test Level
UND	University of North Dakota
ZOI	Zone of Intrusion

Executive Summary

This Planning Study is being conducted to develop an approach to maintaining this vital crossing of the Red River on U.S. Highway 2. The initial step is to explore alternatives for the rehabilitation or replacement of the Kennedy Bridge. This Technical Memorandum examines the range of potential rehabilitation components; evaluates their effectiveness in addressing the deficiencies and needs of the structure; and provides an initial assessment of whether the bridge can be rehabilitated in a manner consistent with the regulations for historic properties. Statements in this document regarding historic features and potential impacts are preliminary and intended to provide guidance in future project development. The upcoming decision on rehabilitation or replacement will lead to a detailed design and evaluation of the historic impacts to determine conformance with the Secretary of the Interior's Standards for the Treatment for Historic Properties.

According to the Minnesota Department of Transportation's (MnDOT's) Management Plan for Historic Bridges (2006), the preferred option for the treatment of a historic bridge is rehabilitation for continued vehicular use on-site, with the rehabilitation following the Secretary of the Interior's Standards.

This study identifies rehabilitation concepts that address the specific areas of concern noted by MnDOT and North Dakota Department of Transportation (NDDOT). If it is determined that the bridge should be rehabilitated, a more detailed analysis and corresponding design will be necessary.

As part of the Kennedy Bridge Planning Study, replacement bridge options were developed and evaluated for comparison to the rehabilitation alternatives. While thorough evaluation of rehabilitation is necessary when studying an historic bridge, a comparison of viable options for a replacement bridge, with preliminary estimates of costs, allows for a determination of whether or not rehabilitation is a reasonable decision. The findings of the preliminary study of bridge replacement options are presented in a separate document: Technical Memorandum – Replacement Bridge Options.

This technical evaluation of rehabilitation alternatives in this Study found that because of the generally good condition of most components of the existing bridge and reasonable alternatives for addressing known deficiencies, rehabilitation is feasible for the Kennedy Bridge and this remains a viable option for future project development. The decision on whether or not rehabilitation is the next step, and if so, which alternative to pursue will be made jointly by MnDOT and NDDOT, with input from other stakeholders, after evaluating the Study findings including estimate of probable costs, environmental factors and other project impacts.

SECTION 1

Project Purpose and Need

A project purpose and need was developed by MnDOT District 2 in 2012 for the Kennedy Bridge over the Red River of the North, U.S. TH 2—S.P. 6018-02, MnDOT Bridge No. 9090, NDDOT Bridge No. 02-350.220.

1.1 Project Purpose

The purpose of this project is to address structural issues for the Kennedy Bridge in order to maintain a structurally sound crossing for U.S. TH 2 at this location. The crossing connects the cities of East Grand Forks and Grand Forks on each side of the Red River of the North. See Figures 1-1 and 1-2.

1.2 Summary of Project Purpose and Need

The primary need for this project is to provide a structurally sound crossing of U.S. TH 2 over the Red River of the North. The items that need to be addressed by the project on the approach spans include the pin and hangers, general corrosion issues, steel bents that are out of plumb, and deteriorated concrete (particularly at the deck overhangs). Structural items to address on the truss spans include review of load capacity, and several corrosion issues: surface pitting; pack rust at gusset plates, splices, and floor beams; and corrosion in bottom chord at corners of truss where trapped water and debris collects. Both the truss and approach spans have a substandard bridge railing. Another issue to address is the effect of soil instability, particularly at Pier 6, which has translated, twisted, and tilted, requiring maintenance adjustments of the bearing.

There are secondary needs that should be considered in the development and evaluation of alternatives for this project. The local communities have a need for a continued reliable river crossing at this location and a connection to the U.S. Trunk Highway system and nearby Interstate. The detour route for unrestricted trunk highway traffic is nearly 50 miles, so maintenance of traffic during construction will be a consideration. A desire for improved pedestrian access, mobility, and connectivity to the existing crossing has been identified through the Grand Forks—East Grand Forks Metropolitan Planning Organization (GF/EGF MPO). This has generated a secondary need to consider opportunities to provide bicycle/pedestrian accommodations on the Kennedy Bridge.

Additional considerations in the Purpose and Need statement include: addressing regulatory requirements for protection of historic properties, addressing structural redundancy for this fracture critical bridge, and analyzing river hydraulics with respect to any bridge improvement projects that are proposed.

1.3 Basis of Study

This Planning Study is being conducted to explore alternatives for the rehabilitation of the Kennedy Bridge, and to perform an initial assessment of whether the bridge can be rehabilitated in a manner consistent with the Secretary of the Interior's Standards for the Treatment for Historic Properties. According to the Minnesota Department of Transportation's (MnDOT's) Management Plan for Historic Bridges (2006), the preferred option for the treatment of a historic bridge is rehabilitation for continued vehicular use on-site, with the rehabilitation following the Secretary of the Interior's Standards.

This study is being conducted within the framework of two laws that offer a measure of protection to historic properties, Section 106 of the National Historic Preservation Act of 1966 and Section 4(f) of the Transportation Act of 1966. Section 106 requires that federally-funded projects take historic properties into consideration during planning and implementation. Under Section 4(f) of the Transportation Act of 1966, a federally-funded transportation project cannot "use" a historic property unless there is no prudent and feasible alternative to the use and the undertaking includes all possible planning to minimize harm to the property resulting from the use. Both laws define historic properties as those listed on, or eligible for, the National Register of Historic Places.

FIGURE 1-1
Project Location Map

FIGURE 1-2
Aerial Photo

The study is also being conducted within the context of a Section 106 Programmatic Agreement (PA) on Pre-1956 Historic Bridges in Minnesota signed by MnDOT, the Federal Highway Administration (FHWA), and other signatories in 2008. The PA encourages historic bridge rehabilitation projects to explore context-sensitive solutions during project planning, including the use of tools such as design exceptions, when deemed appropriate, to help preserve a bridge's historic integrity. MnDOT is proceeding with the treatment of post-1955 bridges as if a PA amendment to do so has been completed.

This study identifies rehabilitation concepts that address the specific areas of concern noted by MnDOT and North Dakota Department of Transportation (NDDOT). If it is determined that the bridge should be rehabilitated, a more detailed analysis and corresponding design will be necessary.

SECTION 2

Bridge Background and Significance

The John F. Kennedy Memorial Bridge (MN Bridge 9090, ND Bridge 02-350.220) was built in 1963 to carry U.S. Highway 2 (Gateway Drive) over the Red River of the North (Red River) between the cities of Grand Forks, North Dakota, and East Grand Forks, Minnesota.

The Kennedy Bridge is comprised of two truss spans and 11 steel-beam approach spans (5 on the west and 6 on the east) for an overall length of 1,261 feet. The trusses are 279-feet-long, Parker through-truss spans assembled with bolts. Unlike earlier Pratt trusses, a Parker truss has polygonal upper chords, a modification that required less steel than a truss with parallel top and bottom chords although was slightly more complex to construct because not all verticals and diagonals were of equal length. The two Kennedy Bridge main span trusses are supported by three reinforced concrete piers. The approach spans are supported by steel bents on concrete foundations.

Like other Red River bridges including the nearby Sorlie Bridge built 30 years earlier (1929, National Register of Historic Places [NRHP]-listed), the Kennedy Bridge was designed to accommodate the specific challenges of its Red River setting. The Red River Valley's soils tend to slump slowly toward the main river channel, and can move substructures over time. The relatively flat topography, combined with spring snow melt on a northward flowing river (mouth of the river can be frozen as spring thaw progresses), can lead to wide spread of runoff over the banks, and major flood events. Floating debris (sometimes large trees) and ice chunks can jam against bridge structures threatening damage and/or closures. The Kennedy Bridge, like other Red River bridges, was built with a pair of trusses and a pier in the center of the main channel where soil movement is minimal. The original design incorporated adjustable bearings; pin and hanger details on the approach span beams; adjustable bents on the approach spans; and other features in response to the soil movement issue. The various features allowing bridge responses to movement help isolate the trusses from soil movement.

The Kennedy Bridge is basically intact. The only alterations, both minor, occurred in 1984 when the reinforced concrete deck was covered with a low-slump concrete overlay and the joints were reconstructed. The bridge was repainted to varying degrees in 1981 and 1996. For a more complete description of minor alterations and maintenance, see Section 4.1 below.

2.1 Historical Background

The Kennedy Bridge, first known as the Skidmore Avenue Bridge, was a cooperative project of the North Dakota and Minnesota state highway departments, with North Dakota taking the lead. It was built with a mix of state and federal funds. The bridge was designed by the NDDOT's Bridge Division under the direction of state bridge engineer Joseph R. Kirby. The contractor was Walter D. Giertsen Company of Minneapolis. The Kennedy Bridge was the last steel through-truss bridge built in North Dakota.

The bridge opened on November 15, 1963. A week later, President John F. Kennedy, who had visited Grand Forks in September for a speech at the University of North Dakota (UND), was assassinated. A few months later the Skidmore Avenue Bridge was renamed the John Fitzgerald Kennedy Memorial Bridge in his honor.

Construction of the Kennedy Bridge was part of a major undertaking in the Grand Forks area that involved establishing a new river crossing north of downtown, significant highway rerouting and reconstruction, and relocation of the Grand Forks airport. U.S. Highway 2 links Grand Forks-East Grand Forks with cities such as Minot and Williston to the west and Duluth to the east. The project shifted Highway 2 from the central business districts of the two cities (where it crossed the Red River on the Sorlie Bridge at Demers Avenue) to a new river crossing at Skidmore Avenue (now Gateway Drive) about eight blocks to the north. The original Highway 2 segment between the two downtowns became a Highway 2 business route. On the western side of the new crossing, Skidmore Avenue was widened to four lanes from the Red River westward to a point about five miles west of the city limits where the reconstructed highway would serve the new Grand Forks

International Airport under construction, and the six-year-old Grand Forks Air Force Base, as well as providing a suitable link to the future Interstate 29 scheduled to be built on a north-south alignment past the new airport.

The bridge, highway, and airport improvements occurred during an expansionary period after World War II when housing developments, hospitals, educational facilities, factories, and shopping centers in greater Grand Forks were being built or expanded. In 1960, Grand Forks was the second-largest city in North Dakota with 34,400 people. It is now third-largest. In 1960 the Grand Forks Air Force Base housed several thousand additional residents, and nearly 7,000 people lived in East Grand Forks.

The Kennedy Bridge was the metropolitan area's third river crossing. The other two bridges were located on the original route of Highway 2 (Demers Avenue), where the first permanent bridge was built in 1888 and the Sorlie Bridge was built in 1929, and about six blocks farther south at Minnesota Point (now Minnesota Avenue). The Point Bridge was described in 1962 as "rickety" and was first load-restricted and then replaced in 1967.

Lead designer of the Kennedy Bridge, Joseph R. Kirby (1904-1991), worked for NDDOT from 1926-1969 and was state bridge engineer from 1955-1969. He was a 1959 recipient of the Elwyn F. Chandler Award for engineering achievement and in 1999 was inducted into the North Dakota Highway Hall of Honor. Kirby was responsible for the design of many of North Dakota's largest and most notable bridges of the postwar period.

The Walter D. Giertsen Company entered the field of bridge and heavy road construction in the 1950s. The company had been established in Minneapolis in 1918. The firm built bridges and highways throughout the Midwest, including several segments of the interstate highway system. When the Kennedy Bridge was built in the early 1960s, the company was headed by Richard W. Giertsen, son of the founder.

2.2 National Register Eligibility

The Kennedy Bridge is eligible for the National Register of Historic Places under Criterion C (design and construction) in the area of Engineering, and under Criterion A (broad patterns of history) in the area of Transportation. The bridge was determined eligible for the National Register as part of a statewide evaluation of post-1955 highway bridges in Minnesota conducted by MnDOT in 2010. The Kennedy Bridge is one of 8 Minnesota bridges from the period (1955-1970) that were recommended by the study as being eligible for the National Register under Criterion A, and one of 29 bridges recommended as being eligible under Criterion C.

***Engineering Significance*.** The Kennedy Bridge's engineering significance within the context of Minnesota bridges lies in its exceptional main span length for this type of truss. While most steel Parker through-truss bridges are 40- to 250-feet-long, the Kennedy Bridge's trusses are 279-feet-long, representing the upper limits of span length for this bridge type.

Transportation Significance. The Kennedy Bridge is also eligible for the National Register for its significant role in an expanded regional transportation network that helped facilitate economic development in this part of Minnesota.

The National Register level of significance is State (on the National Register's national, state, local scale). The period of significance is the year of completion, 1963. The recommended boundary of the National Register-eligible property is a rectangle that measures approximately 100 feet north-south by 1,300 feet east west (see Exhibit 2-1).

Boundaries of Historic Properties

0 250'
Scale

prep by Gemini Research July 2013

Exhibit 2-1
Historic Properties

SECTION 3

Bridge Description and Character-Defining Features

3.1 Geometrics and Bridge Configuration

The bridge is a total of 1,261 feet in length, spanning the entire Red River channel. The bridge carries four lanes of traffic, with a curb to curb width of 28 feet in each travel direction. Figures 3-1 and 3-2 illustrate the general configuration of the bridge.

FIGURE 3-1
Bridge Layout

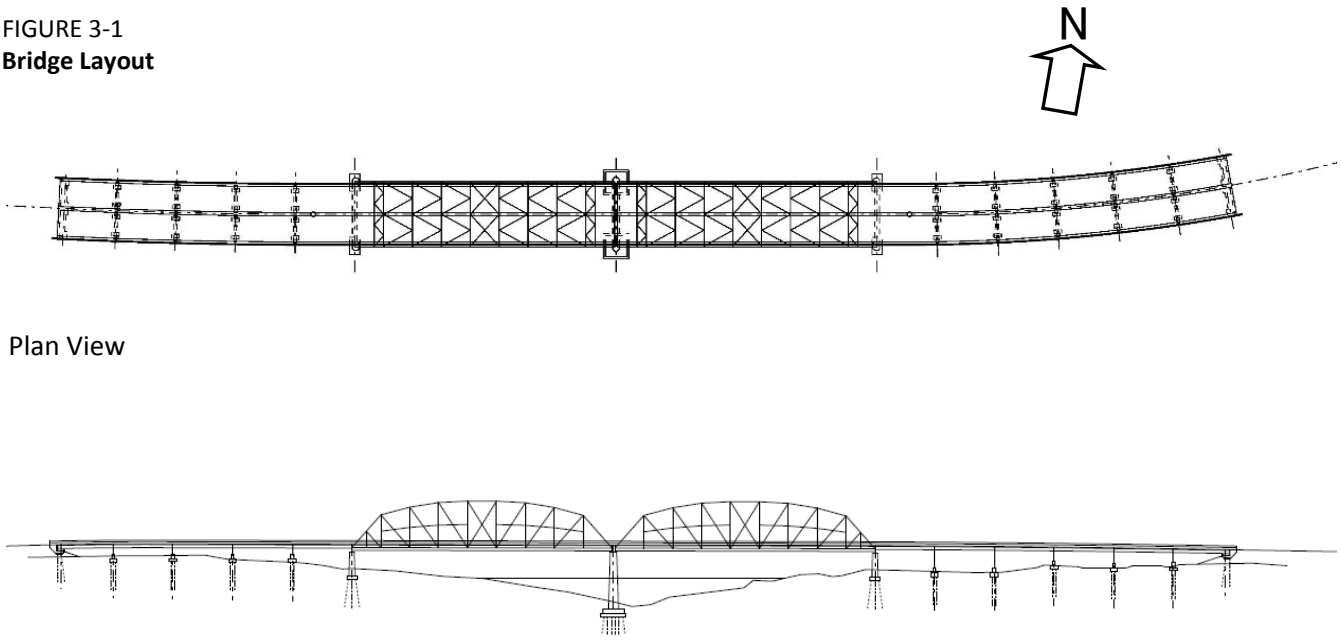

The central portion of the channel contains the Red River during ordinary, non-flood conditions. This center portion is spanned with two, 279-foot-long steel trusses. The trusses are supported by concrete piers that are founded on driven steel piles.

A series of shorter steel girder approach spans connect the trusses to the edges of the Red River channel. These steel girder spans are supported by steel bents connected to concrete footings, which are founded on driven steel piles. The original plans refer to the steel frame substructures under the east and west approach spans as “bents” and the three concrete substructures supporting the trusses as “piers”.

The soils in the Red River channel are soft and tend to slowly move toward the center of the main river channel. The bridge foundations tend to move with the soil. The bridge designers accommodated this future movement by allowing the bridge piers and bents to move relative to the truss and girder superstructure components. Bearings at the pier in the center of the Red River (Pier 7) allow the trusses to rotate slightly about the pier when and if the landward ends of the trusses move upstream or downstream. The piers at the edges of the river (Piers 6 and 8) are expected to move toward Pier 7, and the bridge was designed to allow maintenance crews to disconnect the pier from the truss and reconnect the pier to the truss at a different location. This is an innovative and unusual design feature that continues to allow for adjustments more than 50 years after construction of the bridge.

FIGURE 3-2
Bridge Cross Sections

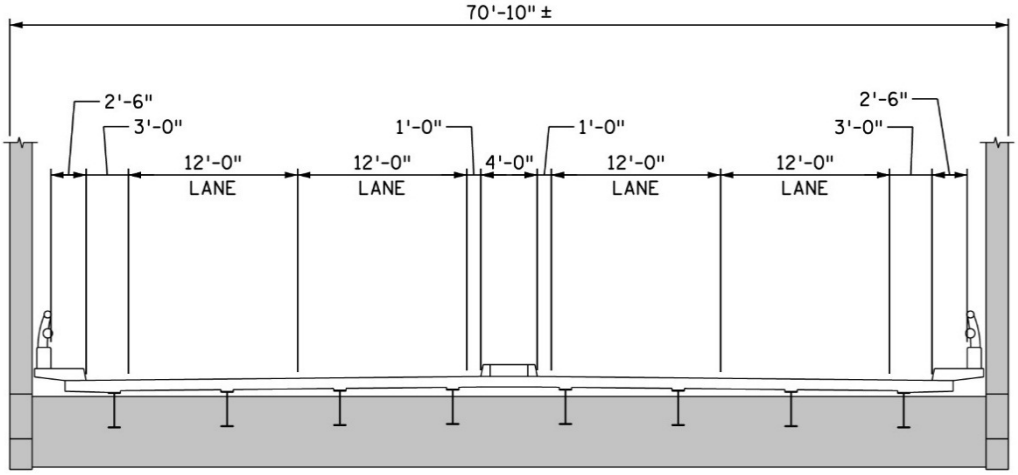

Cross Section Through Trusses

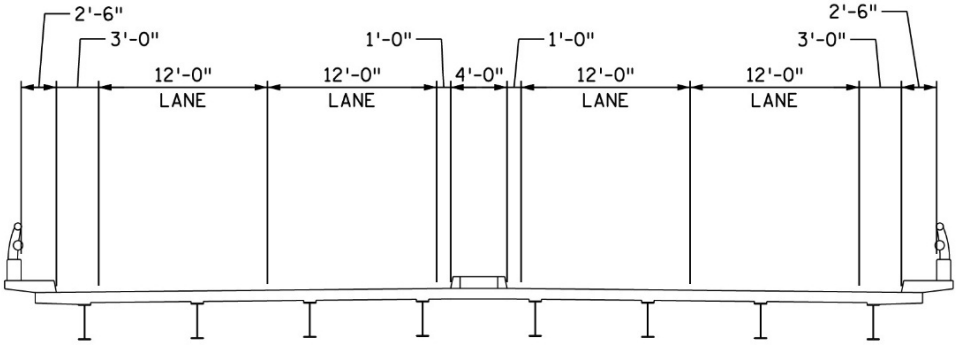

Cross Section Through Approach Spans

A different technique was used to accommodate foundation movement at the approach bents. The steel bents were hinged at the top and bottom, to allow the bents to tilt when the foundations move. Provision was made to disconnect the bents and make them plumb when the tilt becomes too large. This configuration is also unusual.

Pin and hanger joints in the approach spans, combined with a vertical pin or pintle connection at the center of each half of the bridge, allow the bridge deck spans to rotate horizontally in response to foundation movement. This is also an unusual bridge configuration. Figure 3-3 shows a typical pin and hanger as viewed from the side of the bridge; Figure 3-4 shows a vertical pin as seen from underneath the bridge.

There have been only a few modifications to the bridge since construction and several maintenance efforts. Modifications include a 1984 project where the original reinforced concrete deck was scarified and a low slump concrete overlay was placed. The expansion joints were rehabilitated and raised during this project. A plan set from 2002 shows an abutment repair. This appears to be part of a project to replace the approach panels off the ends of the bridge. Maintenance efforts include relocation of the bearings at Pier 6 along the truss bottom chord, as provided for in the original design. A plan set from a 1981 painting project shows a lump sum item for sandblasting and painting, but doesn’t show details of what was to be painted. The bridge was also repainted in 1996. The 1996 painting included the entire truss and bearings; it also included repainting of 5 feet of approach span girders adjacent to truss spans and 6 feet of the girders at the abutments. Maintenance repairs were made in 2007 when cracks in truss welds were ground out.

FIGURE 3-3
Pin and Hanger

FIGURE 3-4
Vertical Pin

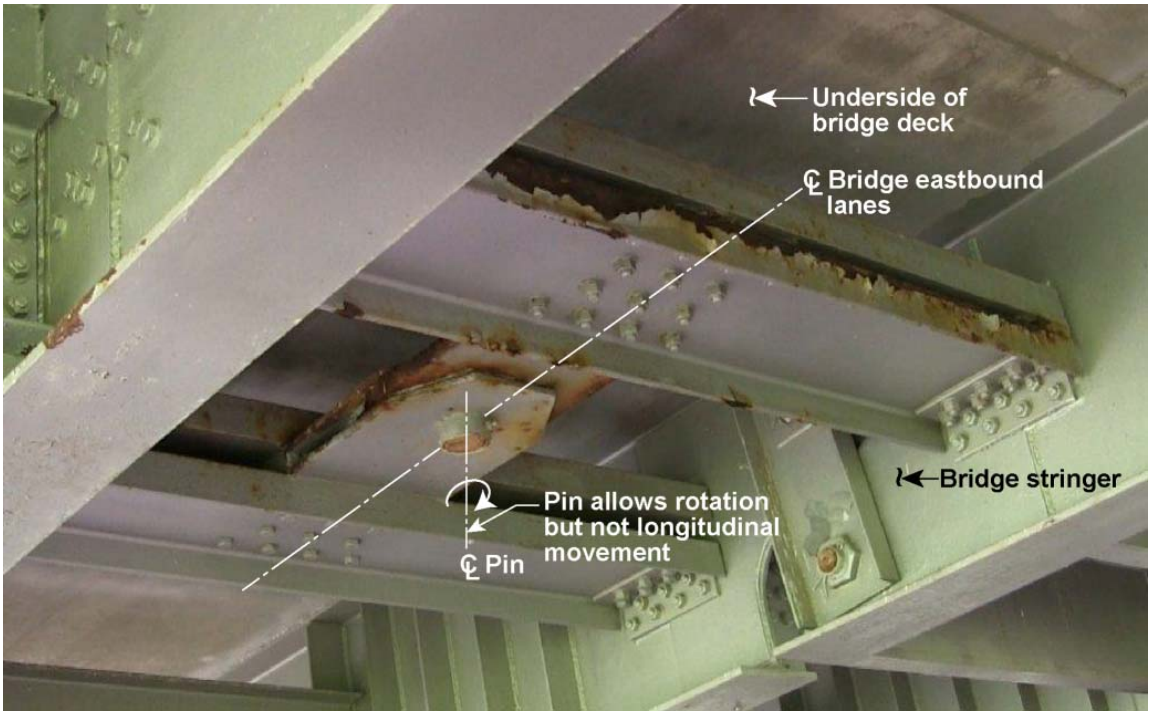

3.2 Character-Defining Features

Character-defining features are prominent or distinctive qualities or elements of an historic property that contribute significantly to its physical character and historic integrity and significance. The Kennedy Bridge's character-defining features include the following:

- a location north of downtown Grand Forks and East Grand Forks that represented a major new river crossing (National Register Criterion A eligibility)
- two 279'-long steel Parker through-trusses that include bolted connections, welded connections, gusset plates, polygonal top chords, inclined end posts at the same angle as diagonals, fairly lightweight verticals (in compression) and diagonals (in tension), polygonal longitudinal bracing, lateral struts and bracing, portal struts and bracing, and floor beams and stringers (Criterion C eligibility).
- provisions that comprise the engineers' response to the challenges of the Red River setting and its unstable soils, including design of the trusses to allow movement of the piers under the trusses, hinged steel supports under the approach spans that allow the foundations to move longitudinally relative to the deck, and pin and hanger connections that allow the approach span deck to move transverse to the original alignment.

Additional important elements of the historic fabric are the modern aesthetics expressed in the trusses' broad smooth surfaces and the tubular rail, and the capped reinforced concrete piers (similar to those on other bridges designed by the North Dakota state highway department).

3.3 Other Historic Properties

There are three historic properties in close proximity to the Kennedy Bridge, all on the western bank of the river in Grand Forks. Exhibit 2-1 shows all historic properties.

3.3.1 St. Michael's Hospital and Nurses' Residence

St. Michael's Hospital and Nurses' Residence is located about 100 feet south of the western end of the bridge. The complex was listed on the National Register under Criterion A (broad patterns of history) and Criterion C (architecture). The property represents Grand Forks' most intact early hospital facility and includes St. Michael's Hospital, built in 1907, and a dormitory for nurses, built in 1913 in association with the hospital's school of nursing. Both buildings are locally significant examples of the Classical Revival style. The facility served as a hospital until 1952, was a nursing home until 1981, and in 1995 was rehabilitated for apartments.

3.3.2 Riverside Neighborhood Historic District

Riverside Neighborhood Historic District, encompassing 112 acres, is located about 100 feet north of the western end of the bridge. The historic district is significant for its concentration of well-preserved examples of late 19th and early 20th century residential architectural styles. When the district was listed on the National Register in 2007, it contained 119 Contributing resources, including a public park, and 54 Noncontributing resources. See also Granitoid pavement.

3.3.3 R. S. Blome Granitoid Pavement, Lewis Blvd. Segment

R. S. Blome Granitoid Pavement, Lewis Blvd. Segment, is comprised of two areas of Granitoid pavement about 250 feet north and 120 feet south of the western end of the bridge. The Lewis Boulevard Segment is one of three portions of Granitoid pavement in Grand Forks, totaling more than 30 linear blocks, which were together listed on the National Register in 1991. The property is significant as a distinctive and nationally rare paving type (National Register Criterion C) and for its role in Grand Forks' transportation history (Criterion A). Granitoid is a patented mixture of Portland cement and crushed granite that was scored on top to resemble stone blocks and provide traction. Installed in 1910-1911, the attractive and durable material was designed to accommodate both horses and autos at a time when society was making the transition between these two modes of transportation. It was installed at a time when most of Grand Forks' streets were still unpaved. The

Lewis Boulevard Segment includes roughly three linear blocks of pavement north of Gateway Drive and a roughly one block segment south of Gateway Drive in front of St. Michael's Hospital and Nurses' Residence. The portion north of Gateway Drive is within the Riverside Neighborhood Historic District, also listed on the National Register.

3.3.4 Archaeological Properties

There are no archaeological concerns within the Kennedy Bridge's existing footprint. A review of archaeological survey work will be needed to rule out potential impacts to archaeology if ground-disturbing work is proposed outside of the existing footprint.

SECTION 4

Condition Description of the Bridge

This is based on inspections, evaluations, and load ratings by MnDOT. Inspections are summarized in the 2012 Bridge Inspection Report, 2012 Bridge Inventory Report, and the 2012 Fracture Critical Inspection Report. The 2013 Routine and Fracture Critical Bridge Inspection, report issued on December 16, 2013, contains the most recent bridge condition rating. Inspection and Inventory Reports and portions of the 2013 Routine and Fracture Critical Inspection Report are attached to this memorandum.

Load rating of the truss and floor beam members was performed by LHB, Inc. under contract to MnDOT in 2009, and load rating of the gussets was performed by MnDOT in 2009. These load ratings indicate that the bridge is acceptable for Inventory loads. A summary of the load rating results is included as supporting documents obtained as part of this Study.

Appraisals of the adequacy of the pin and hanger connections in the approach spans and the adequacy of Pier 6 were conducted by CH2M HILL as part of this study. Findings of these appraisals are described in the sections below.

4.1 Overall Condition

The bridge is classified as fracture critical (non-redundant) and, from the June 6, 2013 inspection (report dated December 16, 2013), has a sufficiency rating of 48.2. The bridge is listed as structurally deficient due to the National Bridge Inventory (NBI) Condition Rating of 4 for the substructure. A Condition Rating of 4 indicates poor condition.

The fact that a bridge is structurally deficient does not imply that it is unsafe. The classification “Structurally Deficient” is used to determine eligibility for federal funding. The NBI Appraisal Rating, which addresses the structural and geometric (traffic) capacity of the bridge rather than the condition of the bridge, is 4 based on the structural condition of Pier 6 of the bridge. The rating of 4 means the structure meets minimum tolerable limits to be left in place as is.

4.2 Deck, Joints, and Railing Condition

Recent testing of the concrete deck indicates high levels of chloride in the deck, leading to an eventual replacement if the bridge is to be maintained as the crossing at this location. The railings and joints are in varying levels of deterioration as described in inspection reports, but they will both be replaced as part of the deck replacement. In the event that rehabilitation of Bridge No. 9090 is pursued, specific attention to these elements will be required.

MnDOT’s June of 2013 bridge inspection recommends reducing the NBI Condition Rating for the deck and the deck joints from Condition 7, which is Good Condition, to Condition 5. Condition 5 is Fair Condition, and is described in MnDOT’s Bridge *Inspection Field Manual* as:

> ***Fair Condition:*** *Deck has moderate deterioration (repairs may be necessary).*
> ***Concrete****: extensive cracking, leaching, scale, or wear (moderate delamination or spalling).*

The current bridge deck is 7-inches-thick. This meets strength requirements, but experience has shown that thin concrete decks are not as durable as are thicker concrete decks. The deck has a low slump concrete overlay, installed in 1984; this overlay is now 30 years old. Deck overlays are generally expected to last up to 30 years. The overlay has reached the end of its projected service life.

Cracks, corroded reinforcement, and areas of saturation observed by bridge inspectors indicate that the bridge deck is near the end of its service life. Recent core testing by MnDOT indicates high levels of chloride in the concrete, above the corrosion threshold.

There are no sidewalks on the bridge. The railings are Substandard, and not only do not meet current standards for control of errant vehicles but are also in a moderately deteriorated condition.

4.3 Superstructure Condition

The superstructure is in reasonably good condition. The current NBI Condition Rating is 6, which represents Satisfactory condition.

The superstructure has exhibited fatigue cracks at plug welds in the high-strength steel gusset plates at truss connection L0, identified in Figure 5-12. These cracks were removed by grinding in 2007 and, as of the 2013 MnDOT bridge inspection, have not recurred.

The bridge was repainted in 1981. The original paint is reported to have been removed from the bridge at that time. It is highly likely that the original paint contained lead; it is unknown whether any of the original paint remains in the interior of the truss components. An additional repainting occurred in 1996 which included the entire truss and 5 feet of the approaches at the abutments and 6 feet of the approaches at the truss end. An investigation performed for MnDOT in 2012 identified lead-based paint on the east approach span, but not on the trusses themselves. Paint on the interior of the truss members was not tested as part of that investigation (American Engineering Testing, Inc. 2012). This rehabilitation study presumes that the paint on the approach spans contains lead, and that there is a high likelihood that some lead-based paint would be encountered if modifications to the truss or blasting/painting projects are implemented.

The truss top chord and the upper sections of the truss vertical and diagonals are reported to be in good condition. The condition rating is based on corrosion pitting, loss of paint, and minor pack rust in connections at the bottom chord and the lower ends of truss vertical and diagonal members. The MnDOT bridge inspectors state that corrosion is not affecting the structure capacity. The bridge load rating indicates that the truss member capacities are controlled by yielding of the gross section rather than by fracture of the net sections at the connections; this supports the inspectors' conclusion that the loss of section due to corrosion pitting does not reduce the load-carrying capacity of the trusses.

Pack rust at splices may have a greater impact on the strength of the truss than does distributed pitting. Where a corrosion pit can have an effect similar to a bolt hole, pack rust across the width of a member can reduce the effective net section subject to yield.

Steel girders and secondary framing in the approach spans are in generally good condition. No cracks, loss of section, or other deterioration has been reported by the MnDOT inspectors. One location of impact damage at a girder bottom flange at the east approach has been recorded.

MnDOT notes cracks in the tack welds securing the lower pin nuts to the girders at the approach span pin and hanger connections, and some corrosion beginning to form in these locations also. CH2M HILL observed one pin and hanger joint that has opened in the west approach. This results in an inclination of the hanger elements of approximately 1 ¾ inches. It is likely that this hanger inclination was part of the original construction.

Calculations of the capacity of the approach span pin and hanger components reveal that the hangers are slightly overstressed in block shear under design loads, with the factored force of 188,200 pounds (188.2 kips) exceeding the factored resistance of 170.4 kips by 10 percent. In the event of failure of a hanger at an exterior girder line, however, the force in an interior hanger under the design live load (with all load factors set to 1.0, consistent with an extreme event) would increase to 314 kips. This far exceeds the factored resistance of the hangers, and indicates a potential for progressive failure of the girder system.

4.4 Substructure Condition

The bridge includes three different substructure types. These include abutments, approach bents, and truss piers. The condition of these three substructure components is described separately.

The condition of the abutments and the approach bents is not specifically addressed in this study. In the event that rehabilitation of Bridge No. 9090 is pursued specific attention to these elements will be required.

4.4.1 Abutments

The abutments are pile-supported concrete elements to which the approach span girders are pinned. The abutments provide vertical support for the end spans, and longitudinal restraint for the approach spans. The MnDOT inspection reports note that the anchor bolts connecting the girder bearings to the abutments are failing. The mode of failure indicates that the 1-foot, 6-inch-tall steel bearing pedestals at the west abutment are being pulled toward the river by the approach span decks with sufficient force that the anchor bolts are overloaded. This suggests that the longitudinal stability of the approach spans may be jeopardized.

4.4.2 Approach Bents

The approach bents are pile-supported concrete caps, supporting steel bent columns. The steel bent columns are detailed to allow tilting, in order to accommodate movement of the soils relative to the approach superstructure. The connections of the steel bent columns to the girders are fabricated to facilitate adjusting the columns to plumb in the event that soil and the concrete caps move toward the river relative to the superstructure. Relative movement is observed; however this movement is opposite in direction from that anticipated in the original design. Figure 4-1 shows a typical bent column tilt. To date no adjustments of the bent columns have been made.

FIGURE 4-1
Tilted Bent

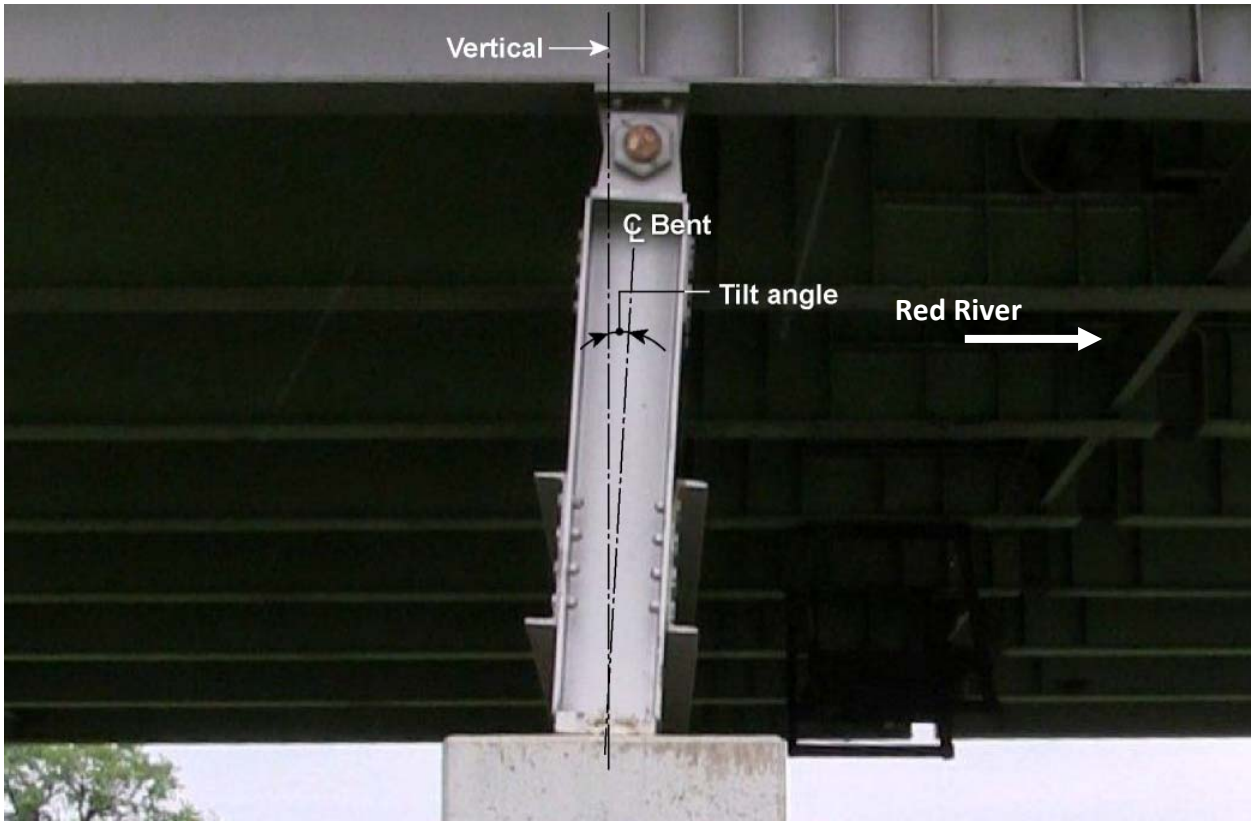

4.4.3 Truss Piers

The west-most pier under the truss span (Pier 6) is exhibiting significant movement and cracking. The other two truss piers appear to be relatively stable, in that movement observed at the bearings is small.

Pier 6 consists of two separate pier columns connected with a concrete beam, or pier cap, at the top of the pier and a concrete wall between the two columns. Each column is founded on a pile-supported concrete footing.

The connections between the top of Pier 6 and the trusses are detailed to allow the truss bearing to be relocated along the truss bottom chords in the event that the soil movement causes the pier to move toward the river. The connections of the trusses to Pier 6 have been relocated several times during the life of the bridge.

Movement of Pier 6 includes translation toward the river, and tilting of the pier top away from the river relative to the bottom of the pier. Movement of the north column of Pier 6 is different from movement of the south column of the pier, resulting in twisting and cracking of the concrete wall between the north pier column and the south pier column.

A separate study of the condition of Pier 6 was conducted. A “Technical Memorandum—Pier 6 Movement Capacity” detailing that study is one of the documents available as part of the Study findings The conclusion of the Pier 6 study is that the connections between the trusses and Pier 6 can continue to be relocated along the truss bottom chord as Pier 6 continues to move. However, the study concludes that Pier 6 has translated and tilted far enough to put the capacity of the supporting piles and the concrete footing in question.

4.5 Waterway Condition

The bridge inspection report from 2011 indicates that the channel is stable. The report recommends underwater inspection of the piers at the maximum allowable interval between inspections of five years. Some erosion is seen, and the bridge inspection report recommends countermeasures such as placing riprap around exposed approach span footings.

The original bridge drawings indicate a low steel elevation of 831.0 feet, based on the National Geodetic Vertical Datum of 1929 (NGVD 29) vertical datum. Calculations of bridge truss and girder elevations suggest that the low point of the truss spans is elevation 831.5 feet, and that the low point of the approach spans is at the east abutment with an elevation of 829.9 feet.

Current river water surface profiles are based on the North American Vertical Datum of 1988 (NAVD 88). Add 1.1 feet to NGVD 29 elevations to obtain NAVD 88 elevation. Vertical elevations of the existing bridge should be adjusted in order to compare to predicted water surface elevations. The corresponding low points are therefore 832.6 feet at the truss and 831.0 feet at the east abutment.

The 100-year flood elevation predicted at the Kennedy Bridge is 832.4 feet, using the NAVD 88 vertical datum. This indicates that the truss spans will pass the 100-year flood with no freeboard at the truss spans, and that the bottom of the steel girders near the east abutment are likely to be submerged. The entire west approach will be above the 100-year flood water surface. The 100-year flood will not overtop the bridge deck.

SECTION 5

Rehabilitation Components

Potential rehabilitation actions are described in this section on a component by component basis. These actions can be combined into rehabilitation alternatives, as described in Section 6 below. Not all rehabilitation actions need be included in any particular rehabilitation project.

5.1 Abutment Bearings

The abutment bearings are 1-foot, 6-inch-tall cast steel pedestals bolted to the concrete abutment and pinned to the bottoms of the steel approach span girders. These bearings provide the only horizontal restraint for the approach spans in the longitudinal direction. An abutment bearing is shown in Figure 5-1.

Longitudinal loads applied to the bearings are a function of the slope of the steel bent frames and the axial load in those frames. Re-plumbing the bent frames will reduce the horizontal loads on the bearings, although continued longitudinal or transverse movement of the deck relative to the foundations will increase the loads. Supplemental longitudinal restrainers are recommended, in order to resist the longitudinal loads.

Longitudinal restrainers can consist of fabricated steel pedestals with links to the ends of the girders, or cast concrete pedestals with links to the girder ends. This concept is shown in Figure 5-2.

FIGURE 5-1
Abutment Bearing

FIGURE 5-2
Abutment Restrainer

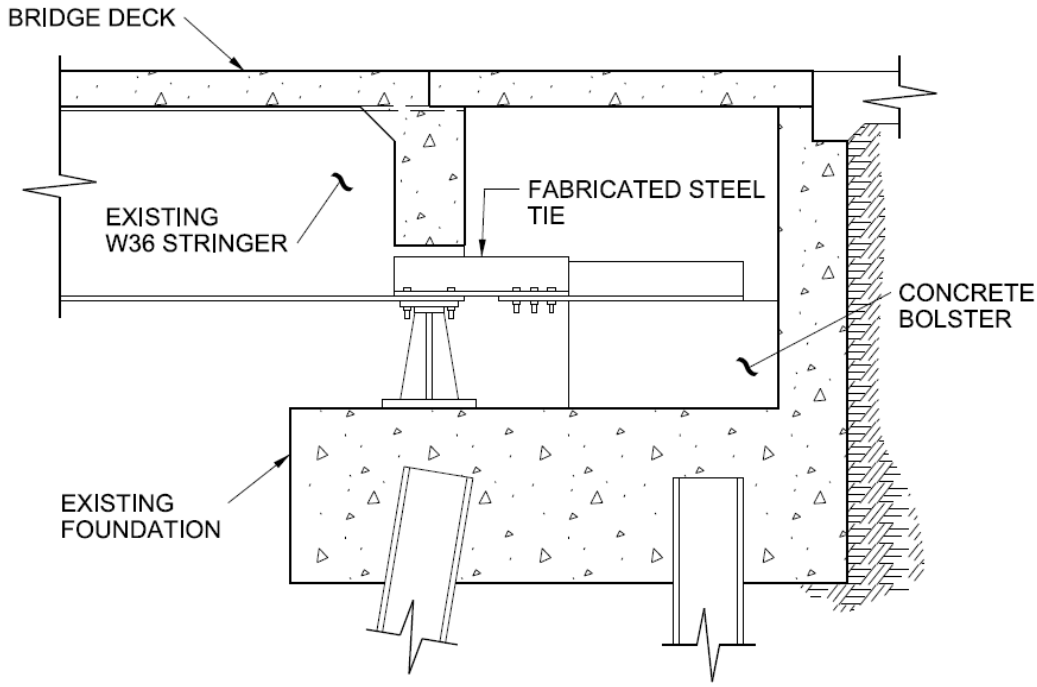

An alternative to steel or concrete pedestals is installation of horizontal cable restrainers from the abutment backwall to the ends of the steel girders. Effectiveness of this alternative is dependent on the magnitude of the loads versus the capacity of the abutment backwall. This variation is not illustrated here, but may be considered if the rehabilitation is advanced.

All work associated with the restrainers can be performed from under the bridge, and without removing or modifying the existing bearings. Installation of abutment bearing restrainers can be performed without interrupting traffic.

Bearing anchor distress is observed only at the west abutment. As the configuration of the abutments, bents, and approach spans is very similar at the east and west approaches, treatment of both abutments is recommended.

5.2 Approach Span Pin and Hanger Detail

Each approach span is divided into segments that are supported by pins and vertical hangers at one end and steel bents. A vertical pin connects the approach span segments at the center of the eastbound lanes and at the center of the westbound lanes, preventing a net longitudinal movement between spans. This combination of pins and hangers for vertical loads and a vertical pin for longitudinal loads connects the approach spans longitudinally while allowing for relative transverse movement of the bents.

Calculations show that the pin and hanger assemblies have adequate strength for the loads applied. In the event that one hanger assembly completely fails, however, the adjacent hanger assemblies are likely to fail. A progressive failure of hangers could result in the loss of a span.

Rehabilitation of the pin and hanger assemblies consists of removing the existing hangers and pins, re-machining the pin holes as necessary to remove corrosion pitting, and installing new pins and hangers. The new pins will be the same diameter as the existing pins but may be a higher grade of steel. The new hangers will have a larger cross section and may include web reinforcement at each end of each hanger element. This is illustrated in Figure 5-3.

FIGURE 5-3
Pin and Hanger Replacement

Each girder must be supported while the work is under way. Supports must be adjustable in order to fit up the new hangers. Traffic should be diverted away from the work area while work is in progress. If desired, the work can be accomplished under a series of short traffic closures during non-peak travel times.

5.3 Approach Span Bent Columns

Approach span bents were designed as links, pinned top and bottom, to allow the foundations to move relative to the approach span decks. This movement would result in the bent columns tilting out of plumb. The connections of the bents to the girders were designed to facilitate relocating the connections along the bottom of the girders when movement occurred, thus restoring the bent columns to a plumb condition.

The details contemplated the foundations moving towards the river. In fact, at the west spans, the deck moved towards the river relative to the foundations. This would require modification of the beams to accommodate the bearing relocation.

Adjusting the bents to be plumb would include removing paint from the webs of the girders at the new bearing locations. New bearing stiffeners would then be bolted to the webs of the girders, and new holes drilled in the flanges of the girders for attachment of the bearings. All affected surfaces would be repainted. The girders would be lifted off of the bent tops, and the bents reattached at the new locations. Figure 5-4 illustrates this adjustment.

FIGURE 5-4
Approach Bent Adjustment

Consideration should be given to surveying the vertical position of the bridge at each bent. If needed, the bents can be lifted and shimmed to compensate for any settlement.

Preparatory work, including drilling, bolting, and painting, can be done without disruption of traffic. Lifting and relocation of the columns should be done without traffic. This can be done during short, off-peak traffic closures.

At this time it is not known how far the approach bents have moved transverse to the bridge, or if the bents have moved transversely at all. Movement of the bents relative to the deck may distort the bents slightly. If this work is advanced to construction, the contractor should be advised that some effort may be necessary to re-connect the bents to the girders.

5.4 Pier 6

Pier 6 is moving in response to unstable soil conditions. This movement is detailed in a separate memorandum prepared as part of this study. The factors that limit the ability of the pier to continue to move are the pier footings and piles that support the pier footings.

Two options for mitigating the movement of the pier are available. One option is underpinning the existing pier, so that new piles can carry the load as continued movement of the pier compromises the existing piles and footings. The second option is complete replacement of the pier.

5.4.1 Pier Underpinning Option

Underpinning Pier 6 leaves the existing pier in its current location. New piles are installed around the pier, and a concrete collar is cast between the new piles and the existing pier. The new piles and concrete collar are designed to support the pier without any contribution from the original piles and footing, and will accommodate continued movement of the pier. This work takes place below grade and does not modify the above ground portion of the pier.

Little vertical room is available for installation of piles. Underpinning of bridge piers in low-headroom conditions has been done with drilled concrete shafts, also known as cast-in-drilled-hole piles. An example of this technology is the recent underpinning of two Interstate Highway bridges near Milltown, Montana. This is difficult and expensive, however, since equipment for drilling shafts, installing casing, and installing reinforcement cages is not well suited for low headroom conditions.

Micropiles are more suitable for low-headroom installation. Micropiles can use relatively small-diameter pipe for casings, installed in 10-foot-long segments. The casings are then filled with grout and a high-strength reinforcement bar installed the full length of the pile. This technology was recently employed to underpin two bridge piers in Dallas, Texas.

The existing truss and approach span remain supported by the original piers during the underpinning project. No temporary supports are required, and it can be accomplished under traffic.

Underpinning is illustrated in Figure 5-5. The work would be performed at both the north and the south columns of Pier 6.

FIGURE 5-5
Underpinning Pier 6

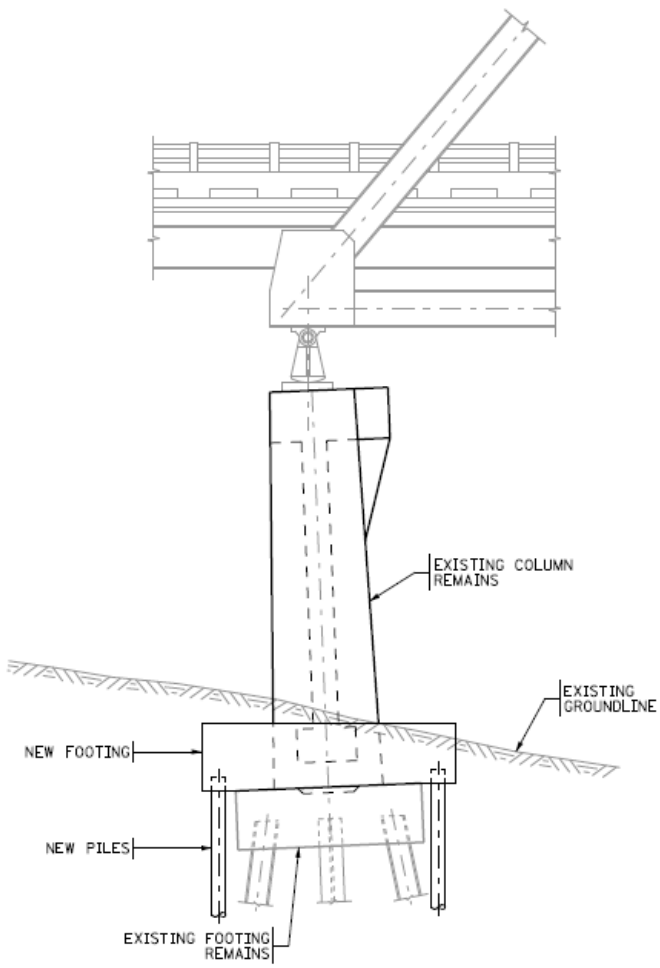

An advantage of underpinning is the ability to perform the work without disrupting traffic. When compared to a pier replacement, the cost of temporary shoring and of removal of the existing pier is also avoided.

A disadvantage of underpinning is that the pier remains in its existing tilted position. Additional soil movement, which is expected to occur, will continue to move the pier. The effect of the existing battered piles on the pier as the pier moves is unknown. The battered piles may continue to induce tilt into the pier, and may affect the distribution of loads into the new piles.

Another disadvantage to underpinning is that the on-going adjustments of the truss bearings along the truss bottom chord will need to be made in response to any additional ground movement. As the soil continues to move, the truss bearings must continue to be adjusted further along the truss bottom chords. Underpinning does not mitigate the movement that has already occurred.

A third disadvantage is that the existing wall between the two columns of Pier 6 will not be repaired. This wall is heavily distorted and cracked, and will continue to distort and crack. This deterioration of the existing wall is of minor consequence to the structural capacity of the pier, but will be a source of question and concern for inspectors and maintenance crews.

5.4.2 Pier Replacement Option

Replacement of Pier 6 includes shoring of the existing trusses and removal of the existing pier and pier footings. A new pile foundation is then installed, and a new pier footing and pier constructed. When the new pier is in place, the temporary shoring is removed and loads transferred to the new pier. Figure 5-6 illustrates replacement of Pier 6.

FIGURE 5-6
Pier 6 Replacement

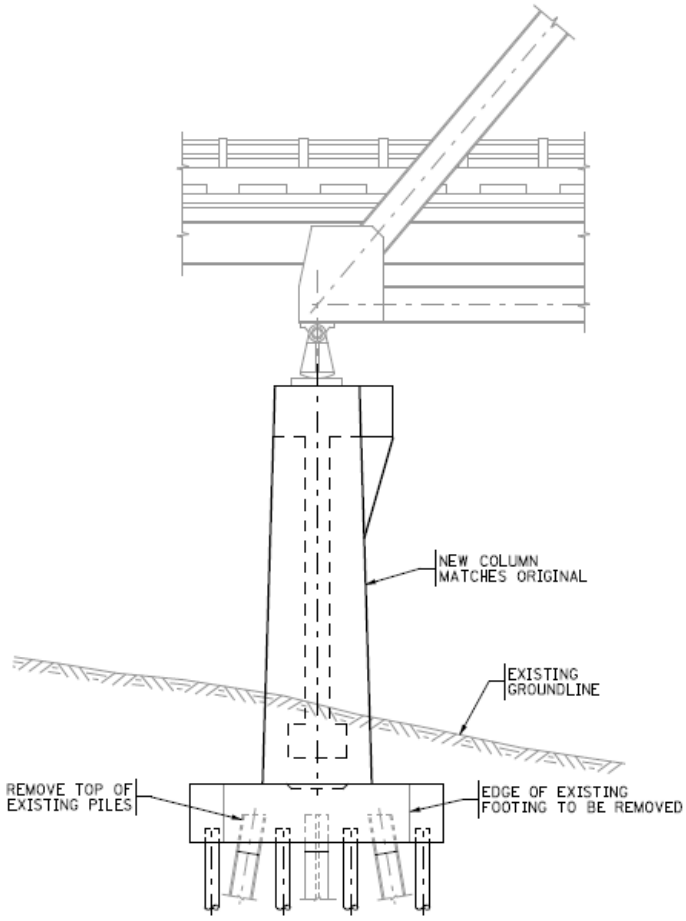

The existing steel piles will be left in place. These piles will be cut off a small distance below the bottom of the new pier footing, so that they will not affect the performance of the new pier foundation.

Micropiles are proposed as support for the new pier. As noted in the discussion of the underpinning, concrete piles can be used, but micropiles are expected to be easier and less costly to install.

A key component of the pier replacement is temporary shoring of the trusses. The original designers constructed the bottom chord of the trusses adjacent to Pier 6 to allow support of the truss along the bottom

chord as far as fifteen feet from the original bearing location. This indicates that little, if any, work on the truss itself will be required to accommodate temporary shoring.

A concern associated with replacement of the pier is the effect on the historic integrity of the bridge. It is reasonable to construct a replacement pier with the same shape and approximate dimensions above ground as the original pier.

5.5 Truss Corrosion Protection

The paint on the truss is failing. Corrosion pits are forming, and minor pack rust is forming at some gusset and splice plates.

The strength of the bridge is controlled by the yield capacity of the gross section of the members. Localized pitting affects the net section fracture capacity of the truss, similar to the effect of a bolt hole. Pack rust extending across a member has the potential of reducing the section subject to fracture, if left uncontrolled.

Inspections and analyses of the truss indicate the corrosion is not significantly affecting the capacity of the bridge at this time. Addressing continuing corrosion is critical; however, once corrosion is initiated, it can be slowed, but it cannot be stopped.

Corrosion control consists of blast cleaning corroded areas and removal of failing coatings. Pack rust at gussets and splices will be removed and the faying surfaces caulked. Where tack welded gusset stiffeners have cracked, the stiffeners will be removed and replaced with bolted angle stiffeners. The entire truss will be recoated in accordance with MnDOT current practices.

Water trapped in truss bottom chord connections contributes to corrosion. Pigeon waste and guano is also contributing to corrosion and is interfering with inspections. Weep holes will be drilled in gussets to relieve water, and the covers over the member perforations will be replaced.

This study contemplates addressing corrosion at the truss spans. Consideration should also be given during design to localized coating failures in the approach spans.

No modifications to the truss structure are proposed. Repairs to weld cracks at the high-strength steel near truss panel points L0 appear to have controlled the cracks. Continued inspection of these areas is recommended.

5.6 Deck Replacement

Evaluation of concrete bridge deck slabs requires consideration of the function of the decks. The deck slabs provide a driving surface, and also carry traffic loads to the beams and girders. Structural failure of concrete deck slabs, in the sense of failure to support truck wheel loads, is extremely rare. Degradation of the surface resulting in potholes and unacceptably rough driving surface is the most common reason for replacing concrete bridge deck slabs.

The concrete deck slab at the approach spans is structurally composite with (connected to) the bridge girders. The deck slab at the truss spans is not composite with the floor beams under the slab.

The existing deck is 50 years old. A deck overlay placed in 1984 is now almost 30 years old. Both the deck and the overlay have reached the ends of their projected service life. Cracks, corroded reinforcement, diffusion of chlorides into the deck below the reinforcement, and areas of saturation observed by bridge inspectors indicate that the bridge deck is near the end of its service life.

The wearing surface of the bridge deck is in reasonably good condition. This suggests that replacement of the bridge deck can be deferred for several years if needed without threatening the strength or stability of the structure.

Deck replacement alternatives include replacement of the bridge deck at the trusses and at the approach spans. Replacement would include a 9-inch-thick reinforced concrete slab, which includes a wearing course. Consideration should be given to making the deck slab at the truss spans composite with the steel girders

and floor beams. The existing longitudinal separation between the slab at the eastbound direction and the slab at the westbound direction should be maintained in the approach spans, although it may be adjusted a small distance away from the center of the bridge. The joint has no structural function at the truss spans, and should be eliminated at the truss spans to eliminate leakage through the joint and onto the floor beams.

The existing deck drains through scuppers that outlet below the deck and deposit drainage water into the river way. A replacement deck will allow for a new drainage system with conveyance of drainage off the ends of the bridge.

Elimination of the longitudinal deck joint in the approach spans can be considered. The longitudinal joint is a part of the bridge transverse articulation, however, as it allows each half of the bridge to flex at the pintle connections. Eliminating the longitudinal joint between halves of the bridge would place the pintles in tension and compression in the event of horizontal flexing of the approach spans. If the resulting tension and compression exceed the capacity of the pintle assemblies, it may be necessary to remove the pintles at each side of the bridge and install a single pintle at the bridge centerline.

The deck can be replaced on the eastbound and the westbound lanes separately. This allows continued, though reduced capacity, use of the bridge during construction.

Consideration can be made to replacing the deck with off-peak-hour lane closures, allowing full use of the bridge for peak hour traffic. This requires use of prefabricated deck components, either steel or precast concrete. Using prefabricated fiber-reinforced composite deck panels, however, would not be suitable if it was decided to make the deck structurally composite with the approach span girders. Any method that uses prefabricated sections with off-peak-hour lane closures tends to increase construction duration, increase traffic control costs, and increase total construction costs. This approach to deck replacement is not carried forward into the options considered below, but more detailed final design may reconsider the benefits of this method of deck replacement.

The existing 39” tall bridge railing is supported by the concrete deck slab and will be removed during deck replacement. Selection of a replacement railing will require coordination of several aspects, and is likely to take considerable time during the final design process to identify a rail that best fits this application. Selection of a rail should include the following factors.

- Protection of bridge users by preventing errant vehicles from penetrating the rail, snagging on the rail, or being penetrated by rail elements. MnDOT requires a minimum of Test Level 2 (TL-2) barriers on low-speed roads, where low speed is considered to be a design speed no greater than 40 miles per hour. FHWA specifies a TL-3 railing for bridges on the National Highway System with modification for Section 106 and 4f considerations. However, MnDOT and NDDOT have expressed a strong desire for a barrier that meets current standards and provides a higher level of protection of the existing truss.
- Protection of the structure by minimizing the Zone of Intrusion (ZOI), which is the vehicle trajectory behind the railing. Vehicles leaning over the rail and impacting fracture-critical truss members present a risk of collapse of the bridge.
- Protection of pedestrians and bicyclists, if the roadway is reconfigured to accommodate a path.
- Preservation of the historic character of the bridge. The existing tubular railing, while not a character-defining feature, is a significant component of the historic fabric of the bridge and contributes to its historic integrity and National Register eligibility.

The most robust structural solution is a solid New Jersey type barrier, as is currently used in typical bridge construction. A metal rail may be attached to the top of the barrier to meet bicycle rail height requirements. This solution is not likely to meet the Secretary of the Interior’s Standards.

Several tested rails with the beam and post configuration similar to the base of the existing bridge rail are available. Examples include the Nebraska Open Rail and the Kansas 32-inch Corral Rail. A break-away metal

handrail can be attached to the top of the tested concrete rail to meet bicycle rail height requirements. A comparison of these options to the existing rail is shown in Figure 5-7.

FIGURE 5-7
Replacement Railing Options

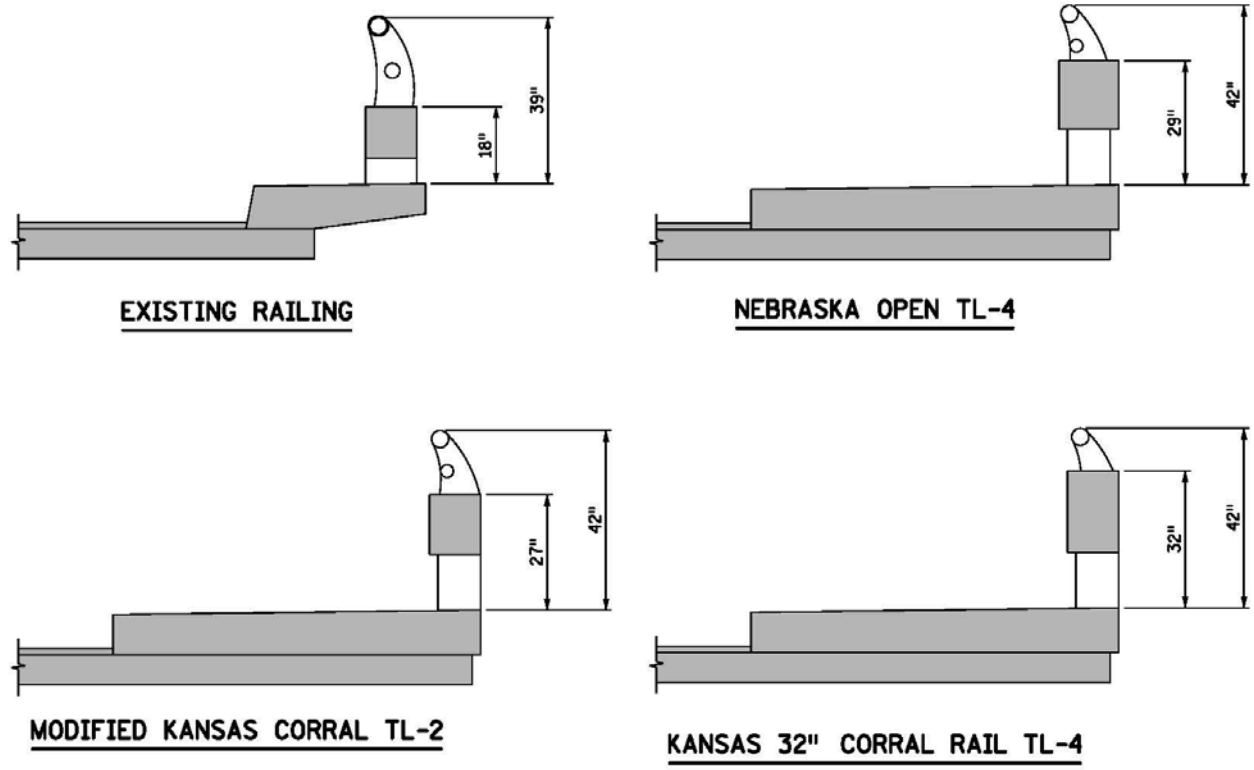

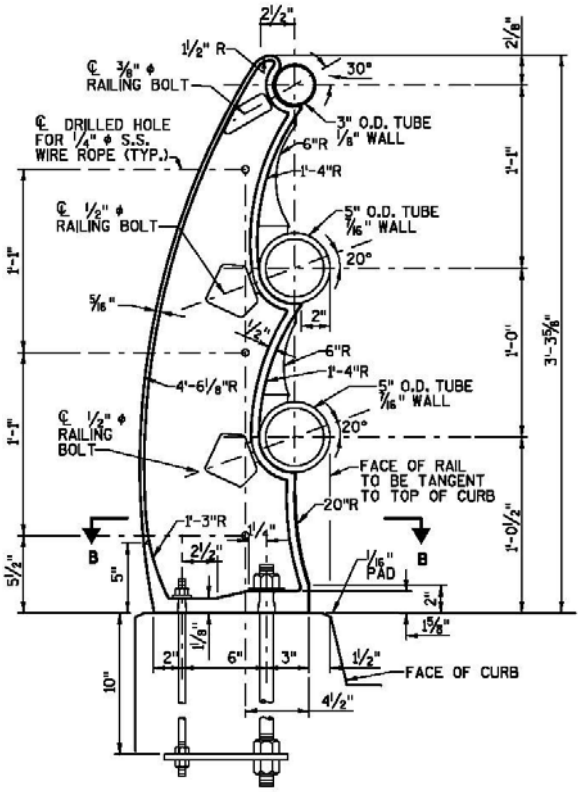

ALUMINUM TUBE RAILING

ALUMINUM TUBE RAILING

5.7 Addition of Shared-Use Path

The local communities have expressed a desire for a pedestrian and bicycle crossing of the Red River at or near this location. The addition of a path would provide access for east-west pedestrian and bicycle movement along the U.S. TH 2 corridor. In addition, a pedestrian crossing would improve connectivity of the existing trail system.

5.7.1 Background and Design Guidance

5.7.1.1 Width

- The minimum paved width for a 2-directional shared-use path is 10’ (AASHTO 5.2.1).
- The minimum width needed to enable a bicyclist to pass another path user going the same direction, at the same time another path user is approaching from the opposite direction is 11’ (AASHTO 5.2.1).

5.7.1.2 Shy Distance/Buffer

- If raised curbs are used, 1’ of additional path width should be provided, as users will shy away from the curb, resulting in a narrower effective path width (AASHTO 5.2.9).
- At minimum, provide a 2’ buffer for clearance to lateral objects (poles, etc.). Where “smooth” features such as bicycle railings or fences are introduced with appropriate flaring end treatments, lesser clearance is acceptable (not less than 1’) (AASHTO 5.2.1).
- Where a bridge or underpass provides continuity to a shared-use path. The “receiving “clear width on the end of a bridge (from inside of rail or barrier to inside of opposite rail or barrier) should allow 2’ of clearance on each side of the pathway, (as recommended in section 5.2.1), but under constrained conditions may taper to the pathway width. Carrying the clear areas across the structures has two advantages: the clear width provides a minimum horizontal shy distance from the railing or barrier, and second, it provides needed maneuvering space to avoid conflicts with pedestrians or bicyclists who may have stopped on the bridge (AASHTO 5.2.10).

5.7.1.3 Setback from Road

- The minimum recommended distance between a path and the roadway curb (i.e., face of curb) is 5’. Where a paved shoulder is present, the separation distance begins at the outside edge of the shoulder. Thus, a paved shoulder is not included as part of the separation distance, nor is a bike lane considered part of the separation (AASHTO 5.2.2).
- **NOTE**: Due to the constrained bridge width, a barrier can be eliminated.

5.7.1.4 Railings

- Where a recovery area (i.e., distance between the edge of the path pavement and the top of the slope) is less than 5’ physical barriers or rails are recommended adjacent to a parallel body of water. Barriers or railings should be a minimum of 42”high (AASHTO 5.2.2).

5.7.1.5 Accessibility

- The recommended minimum continuous and unobstructed pedestrian access route width is 5’. This is the width needed for two wheelchairs to pass or for a wheelchair to turn around, and allows two people to move continuously side by side and/or pass one another without conflict.
- In areas where space is extremely limited, a 4’ wide continuous and unobstructed pedestrian access route is acceptable for short distances only, and must include a 5’ wide section every 200’, for a minimum length of 5’ (MnDOT 2014, 11-3.06).

5.7.1.6 Background—Bike Lane Width

- A bicyclist’s preferred operating width is 5’. For roadways where the bike lane is immediately adjacent to a curb, guardrails, or other vertical surface, the minimum bike lane width is 5’, measured from the face of a curb or vertical surface to the center of the bike lane line.

- Along sections of roadway with curb and gutter, a usable width of 4' measured from the longitudinal joint to the center of the bike lane line is recommended. Drainage inlets and utility covers are sometimes built so they extend past the longitudinal gutter joint. Drain inlets and utility covers that extend into the bike lane may cause bicyclists to swerve, and have the effect of reducing the usable width of the lane. Therefore, the width of the bike lane should be adjusted accordingly, or else the structures should be removed (AASHTO 4.6.4).

5.7.1.7 Other

- **Lighting**. Non-motorized travel will now be accommodated on the bridge. Ensure adequate lighting is installed on the bridge and approaches.
- **Non-motorized connections**. Coordinate with Grand Forks/E. Grand Forks to ensure continuous connections to the shared-use path to reduce the likelihood of wrong-way bicycling at where the path ends.

Two concepts were considered to accommodate bicycles and pedestrians at the Kennedy Bridge. These concepts include reconfiguration of the lanes to provide shoulders and/or sidewalk space internal to the truss or a separate external path, attached to the truss and separated from the vehicular deck.

5.7.2 Internal Bicycle/Pedestrian Accommodation (Inside Truss)

FIGURE 5-8
Bike Path Alternative Cross Sections

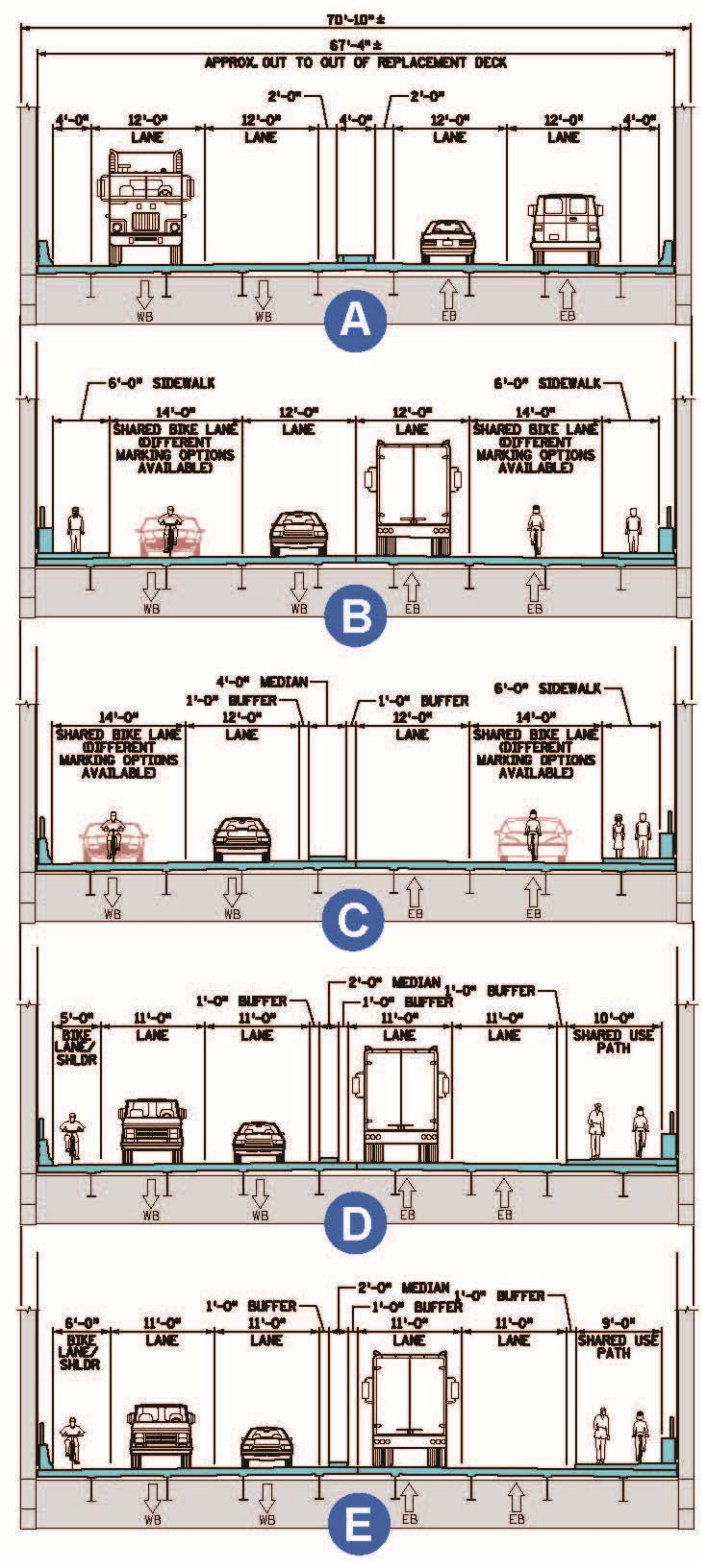

Figure 5-8 shows five roadway cross sections considered and discussed to accommodate bikes and pedestrians inside the truss. While other cross section concepts were also developed and discussed, the five shown here effectively illustrate the range and progression of the ideas considered. The Final Report for the Kennedy Bridge Study includes additional background and discussion of these options in the context of overall project development and next steps, with comparison to the external structure. An advantage of the internal concept is the relatively low cost, considering that the deck needs to be replaced. This option also has less effect on the historic character of the bridge than does an external/separate path. Disadvantages include less separation between vehicles and pedestrians, and increased potential for leakage of the longitudinal joint between the

eastbound and westbound lanes. The truss structure can be expected to have the capacity necessary to carry the additional loads of the shared use path since an evaluation of the more substantial external path showed that this was possible.

Additional discussion of the lane configuration options considered and the basis of selection for a best-fit configuration is included in the Final Report.

5.7.3 External Bicycle/Pedestrian Accommodation (Outside Truss)

A concept for an external/separate path is shown in Exhibit 5-1 and Figure 5-9 through Figure 5-11. This concept is similar to that used on other bridges, such as the historic west spans of the San Francisco-Oakland Bay Bridge in California. The path would be located on only one side of the bridge.

The concept as shown uses a 12-foot-wide path separated from the truss by about 2 feet. The deck is an orthotropic steel plate with a 1-inch-thick polymer-modified concrete wearing surface. Alternatives that may be studied in final design include a fiber-reinforced composite deck, although previous design studies have not demonstrated a weight savings. In final design, the clear width of the path could be reduced to a minimum of 10 feet for some weight reduction if desired.

FIGURE 5-9
Cross Section of Separated Bicycle/Pedestrian Path (Trail) at Approach Spans

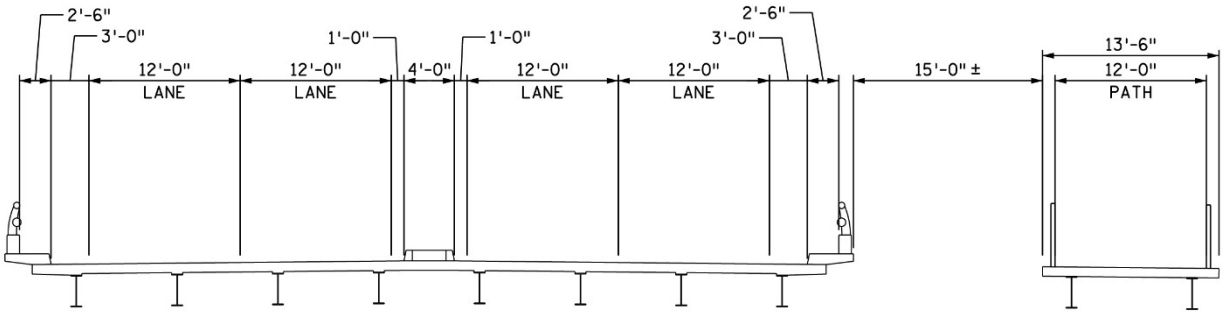

FIGURE 5-10
Cross Section of Separated and Attached Bicycle/Pedestrian Path (Trail) at Truss Spans

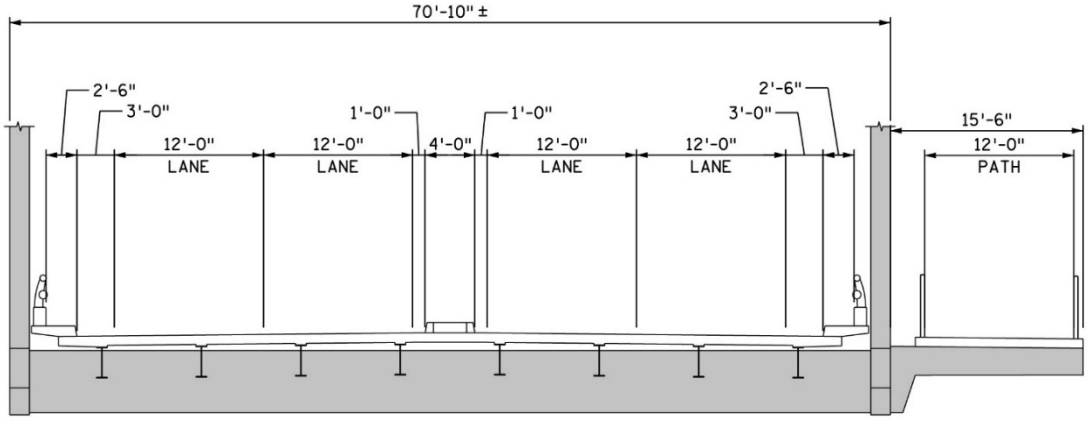

FIGURE 5-11
3D Model Perspective of Bicycle/Pedestrian Structure Attached to Truss Spans

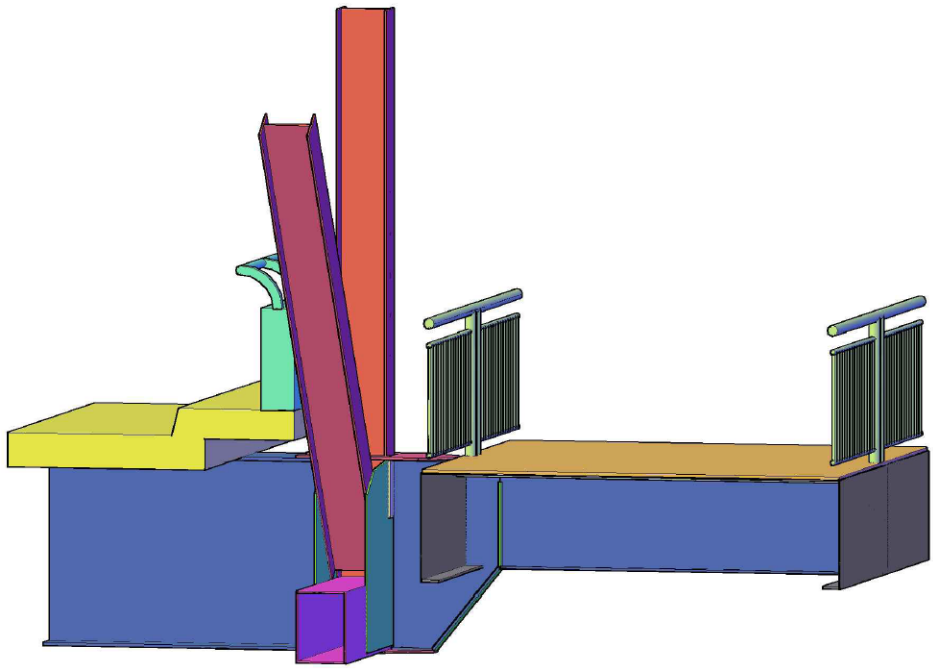

Analysis of the truss indicates that the gusset plates at the L0 and L0' truss connections (the bottom chord connection at each end of the trusses) may require reinforcement in order to carry the dead load plus the live load of the separated path. Reinforcement consists of the addition of steel plates approximately ½-inch in thickness and 12-inches wide at three locations per connection.

The gusset plate analysis follows MnDOT guidelines for in-plane bending of gussets, and conservatively neglects member bearing within the connection and the effect of the floor beam end connection plate. If a separate path is advanced to final design a refined analysis may demonstrate that the reinforcement can be reduced or eliminated; however for the purposes of this alternative evaluation the reinforcement is presumed to be required.

The path east and west of the trusses will parallel the approach spans but will be separated from the existing deck as shown in Exhibit 5-1. The path in this area will be a conventional beam and slab bridge with piers that align with the existing approach span piers for hydraulic reasons.

An advantage of placing the path outside of the trusses (on one side of the bridge) is that the path can be wider than a path inside the trusses. Also, pedestrians are separated from the vehicular traffic in this option.

A disadvantage of placing the path outside of the trusses is that the path blocks access to the truss bottom chord and to the bridge floor system for inspection and maintenance by an under bridge inspection vehicle bucket from the deck. Another potential disadvantage is that the path may be considered to have an adverse effect on the historic character of the bridge and other historic properties. Because construction would occur outside the bridge footprint, a review would be needed to identify potential archaeological properties. The Final Report includes more discussion in the context of overall project development and next steps.

5.8 Additional Considerations

The existing truss bridge is non-redundant, meaning that failure of a single component can result in loss of the entire bridge. Non-redundant truss tension members, also referred to as fracture critical members, are shown in Figure 5-12. Truss floor beams are also non-redundant.

FIGURE 5-12
Non-Redundant Members

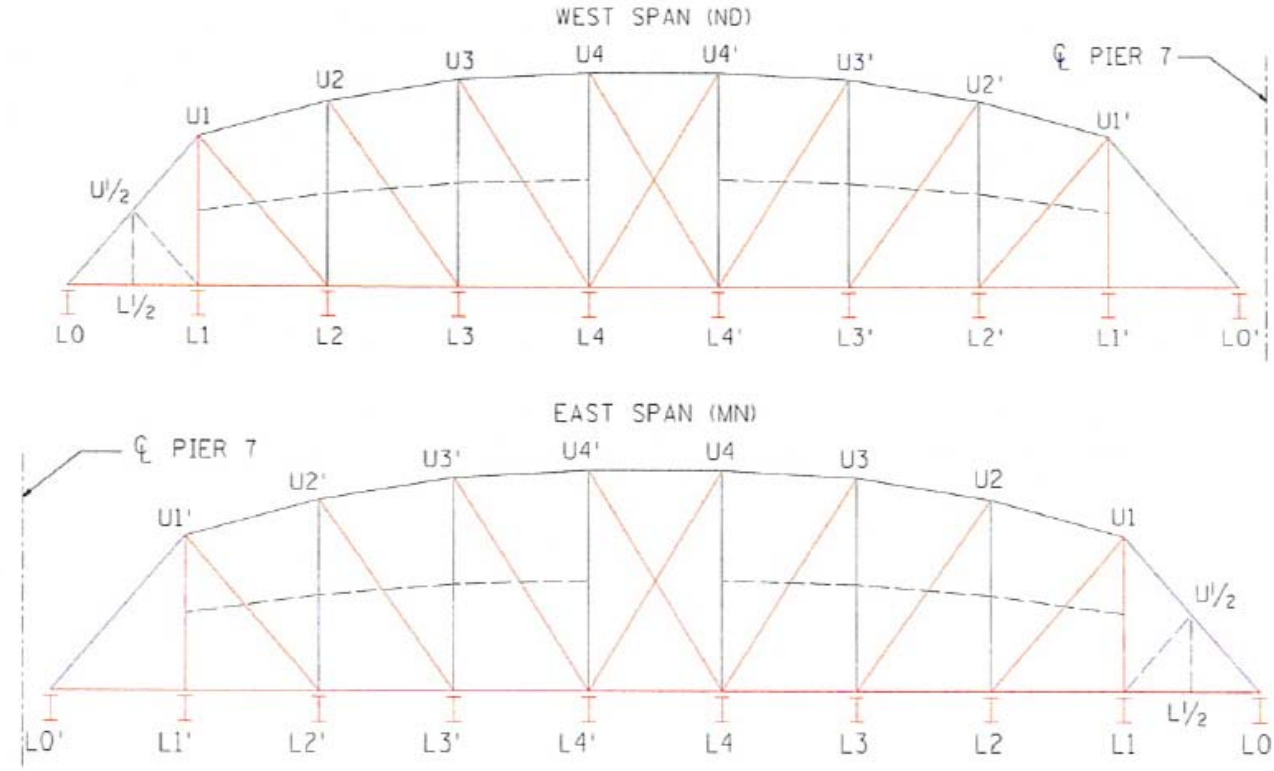

Non-Redundant truss members are shown in orange. Illustration is from MnDOT bridge inspection report.

Redundancy can be incorporated into truss bridges by the addition of parallel members or cables, by replacing critical members with internally redundant members, by addition of external supports, or by some combination of these methods. Previous studies of methods to eliminate fracture critical elements in truss bridges by introducing alternate load paths have demonstrated that this is not economically feasible, and will have adverse effects on the historic character of the bridge. Development of concepts to completely eliminate fracture critical elements is not carried further in this study.

Consideration is given to providing alternate load paths for some fracture critical elements when such load paths can be incorporated into other rehabilitation components. Two such alternate load paths have been identified.

One alternate load path is the proposed shared-use path located outside of the trusses. The deck framing and steel plate deck provide an opportunity to use the framing as a continuous tension chord. This requires connection of the path to the existing truss chord between each panel point.

A second potential load path is the new concrete deck and bridge rail that may be installed as a deck replacement. High-strength steel bars or tendons can be placed in the barrier and the outer few feet of the deck. This chord can be connected to the existing truss bottom chord with steel transfer tabs, as shown in Figure 5-13.

In both cases, the alternate load path is applied to only some of the fracture critical members, so the overall bridge is still considered fracture critical.

FIGURE 5-13
Potential Added Load Path Redundancy

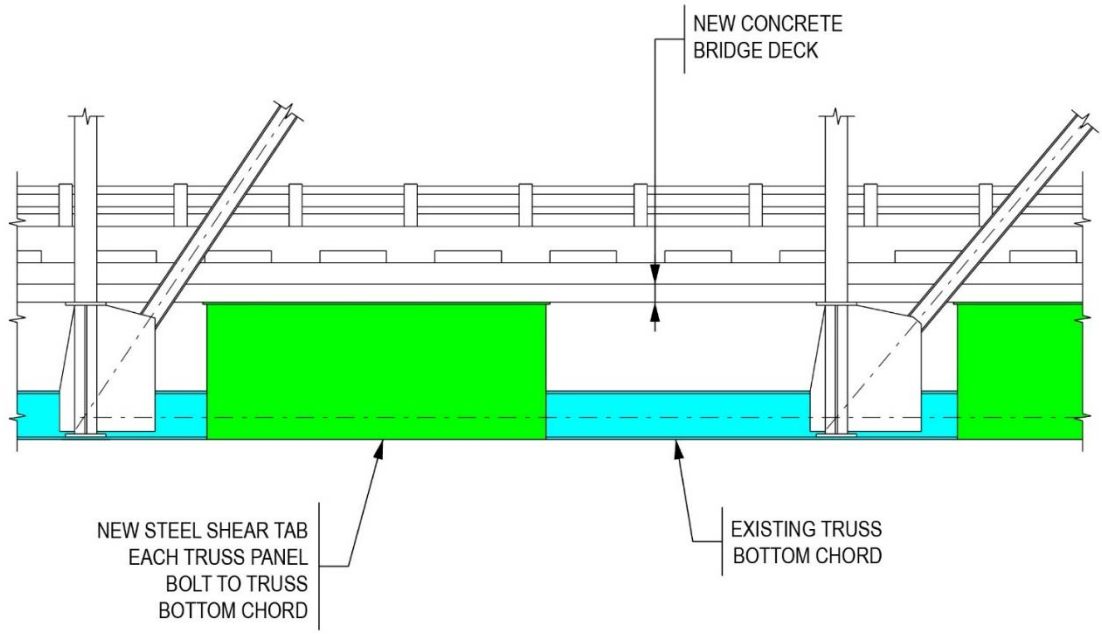

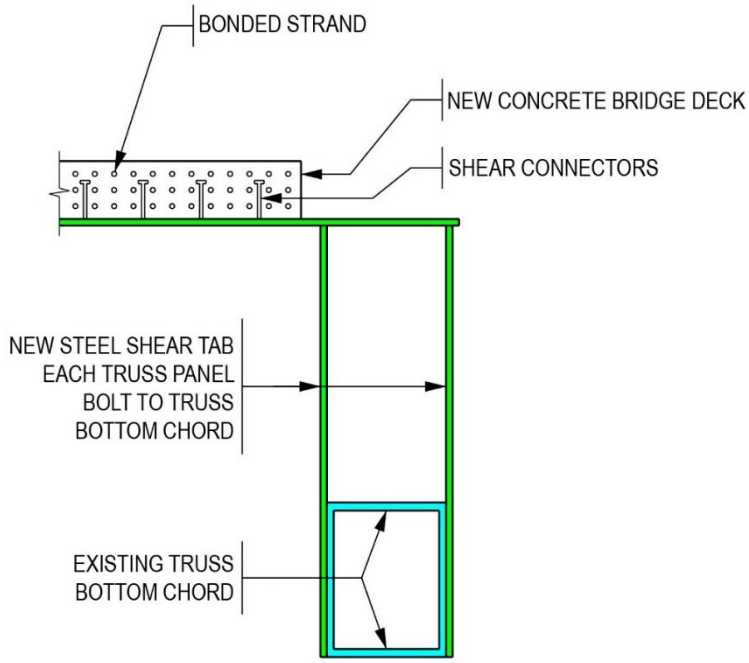

Comparison to other projects suggests that connections are complex and the amount of steel required to transfer chord forces from the original truss to the redundant element is high. Implementing this concept with the proposed shared-use path would improve reliability of only one chord, and would not improve any of the diagonal tension elements in the trusses. Implementing the concept using the deck as a redundant tension member addresses all bottom chord members but not the diagonal members or floor beams.

In each case the connections between the existing bottom chord and the new tension member will extend vertically from the existing bottom chord to the deck level. The connections will be noticeable from a distance.

These redundancy concepts are not recommended, as they provide limited benefit. Comparison to other projects where this has been attempted suggests that the cost is relatively high. These are not included in the alternatives described in Section 6.

5.9 T-1 Steel

The truss bottom chords at piers 6 and 8 are fabricated of AASHTO M270 Grade 100 steel, commonly known as T-1 steel. This material has been implicated in cracking of butt welds and weld heat-affected zones in other bridges. As a result of cracking in other bridges, FHWA issued Technical Advisory 5140.32 recommending that owners of bridges with T-1 steel regularly and appropriately inspect welds in the T-1 members (FHWA 2011, MnDOT 2011).

MnDOT does perform non-destructive testing of welds in the T-1 components of the Kennedy Bridge. A crack was found and repaired, and MnDOT continues to monitor these welds.

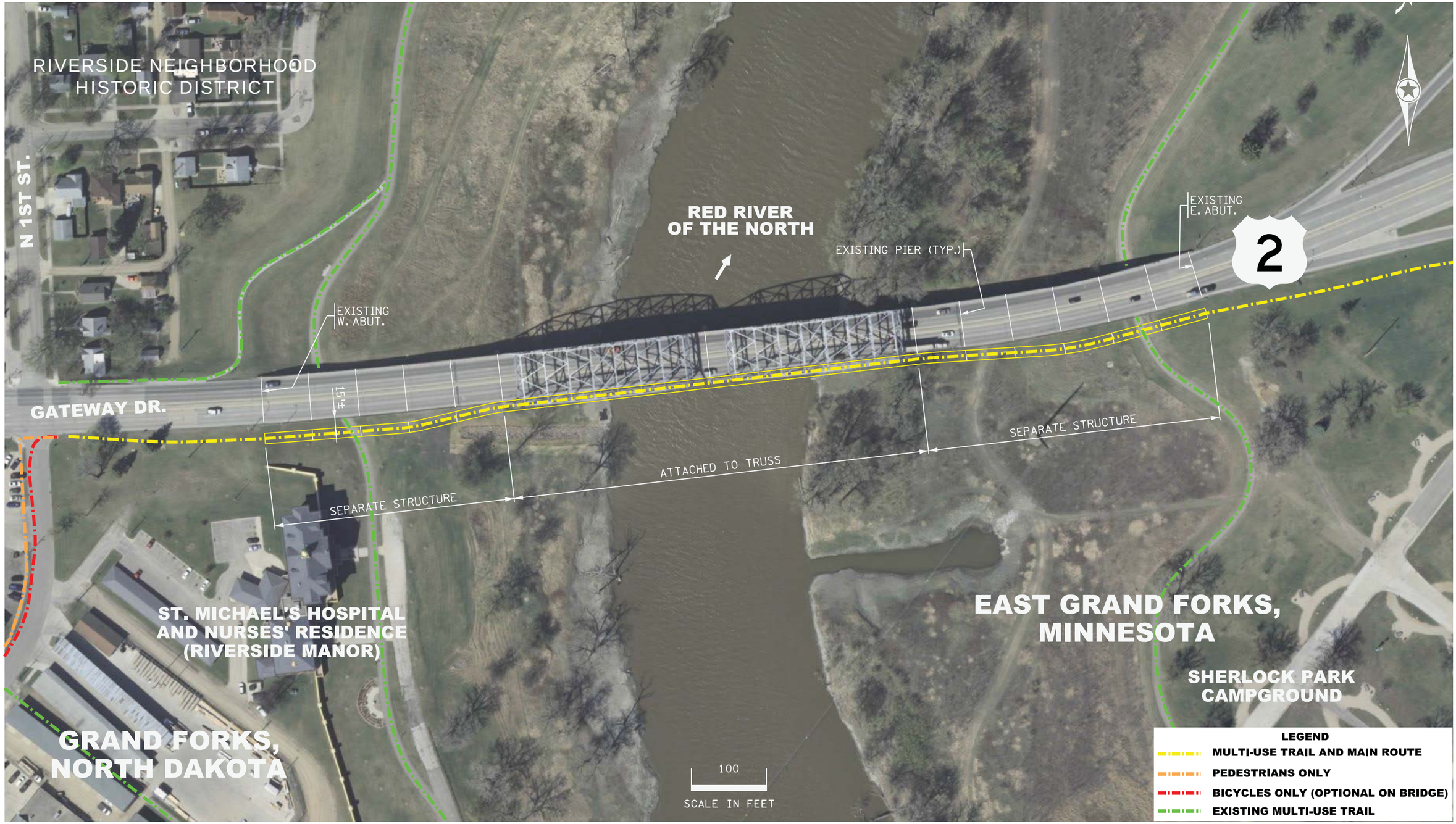

Exhibit 5-1
Preliminary External/Separated Trail Layout

SECTION 6

Rehabilitation Alternatives

The alternatives described in this section combine the rehabilitation components defined in Section 5 above into potential rehabilitation projects. These alternatives are likely combinations of rehabilitation components, but are not the only possible projects. In the event that rehabilitation of Bridge No. 9090 is pursued, these alternatives may be modified to optimize the rehabilitation.

The minimal rehabilitation alternative must meet the primary need as described in the Purpose and Need statement. Additional alternatives will meet secondary needs and other considerations, and may include alternative means of addressing the primary need.

6.1 Rehabilitation Alternative 1—Minimal Rehabilitation

Alternative 1 – Minimal Rehabilitation meets the primary need of the project, which is to continue to provide a structurally sound bridge. Structural deficiencies that put the bridge itself at risk are addressed in this alternative. These deficiencies include stability of Pier 6, effectiveness of the truss corrosion protection, and the stability of the steel bent columns in the approaches. This alternative also addresses the secondary need for maintenance of traffic by minimizing closures during construction. It defers treatment of the concrete bridge deck to a future project.

6.1.1 Underpin Pier 6

Pier 6 has moved and tilted, as described in the Technical Memorandum: Pier 6 Movement Capacity. Stability of Pier 6 can be provided by underpinning the pier by installing new piles, and connecting these new piles to the existing pier columns, or by completely replacing the pier. This alternative includes underpinning of the pier, as it is somewhat less costly than replacement of the pier.

A sketch of the underpinning concept is shown in Figure 5-5. This consists of excavating around the pier to the top of the existing footings, installing micropiles sufficient to support the pier, and casting a new concrete collar to connect the new micropiles to the existing pier. With the underpinning in place the pier can continue to move, and the new piles will support the pier with no further contribution from the original piles.

The advantage of the underpinning concept is that no temporary support of the existing bridge is required for construction. The work takes place below grade and does not modify the above ground portion of the pier. The original bearings and the exposed portion of the pier columns are unchanged, which preserves the historic fabric of the bridge.

The concrete collar needed for the underpinning provides an opportunity to provide a foundation for temporary support for the truss above. Such temporary support may be necessary in order to adjust the truss bearings in the future.

Disadvantages are that the distortion and cracking of the existing pier wall are not mitigated. The existing pier remains in its current tilted configuration, and continued movement of the pier will require further relocation of the bearings on the truss bottom chord member. The bridge pier will continue to move and, because the movement to date is not mitigated, the longevity of the underpinned pier is likely to be shorter than that of a replaced pier. The effect of the existing piles on the pier as the pier continues to move is unknown.

The bridge may remain open to traffic while the pier underpinning is underway.

6.1.2 Truss Corrosion Protection

The truss currently has sufficient strength to carry the design loads. Ongoing corrosion is resulting in pits in members and in gusset plates, and in pack rust at splice plates and gusset plates. Continued corrosion will affect the capacity of the trusses.

This alternative includes complete repainting of the truss spans, including the trusses and the steel floor system. Painting includes cleaning of corrosion pits, and includes raking pack rust from connections and caulking the gaps created by the pack rust.

A part of the corrosion protection is sealing the truss member perforations to exclude pigeons, and providing drains in the lower chord gusset connections to minimize standing water.

Repair of gusset stiffeners is included. Where stiffener to gusset welds have cracked, remove the stiffener, grind the welds smooth, and bolt new stiffeners to the gusset prior to painting the bridge.

The bridge can remain open to traffic while the corrosion protection is completed. Some lane closures will be required for protection of workers, to allow access to the structure, and to avoid working directly over traffic.

6.1.3 Approach Span Bent Columns

The approach span bents will be re-plumbed. This requires drilling new holes in the bottom flanges of the girders to accommodate the revised location of the columns, and lifting the superstructure off of the bents columns while the bents are adjusted. This is illustrated in Figure 4-1.

Traffic on the eastbound lanes should be closed while the eastbound bents are adjusted, but traffic may continue to use the westbound lanes. Likewise, traffic on the westbound lanes should be closed while the bents under the westbound lanes are adjusted but traffic can use the eastbound lanes.

6.1.4 Abutment Bearings

Additional longitudinal restraint will be provided at the west abutment. This restraint may consist of a fabricated steel anchor, bolted to the existing abutment and connected to the ends of the existing approach span girders, or of reinforced concrete pedestals with fabricated steel anchors connected to the existing girders, as shown in Figure 5-2.

Work on the abutment bearings can be completed without affecting traffic on the bridge.

6.1.5 Deck Rehabilitation

Deck replacement or significant deck rehabilitation is not included in this alternative. The existing deck can continue to be used for a number of years. At some point, however, a project to replace the deck will be required.

6.2 Rehabilitation Alternative 2A—Moderate Rehabilitation

Alternative 2A – Moderate Rehabilitation meets the primary need of the project, which is to continue to provide a structurally sound bridge, and addresses the secondary need of maintaining the river crossing and connectivity of the U.S. Trunk Highway system. Actions that maintain the bridge include replacement of the bridge deck, and increasing the reliability of the pin and hanger connections in the approach spans.

Structural deficiencies that put the bridge itself at risk are addressed in this alternative. These are the same as proposed for Alternative 1, except that a more robust treatment of Pier 6 is proposed.

6.2.1 Replace Pier 6

Pier 6 has moved and tilted, as described in the Technical Memorandum: Pier 6 Movement Capacity. Movement of Pier 6 can be mitigated by underpinning the pier by installing new piles and connecting these new piles to the existing pier columns, or by completely replacing the pier. This alternative includes replacing the pier.

A sketch of the pier replacement concept is shown in Figure 5-6. This consists of supporting the trusses at panel point L 0.5, removing the existing pier and footing, installing new micropiles, and constructing a new pier. When the new pier is in place, the temporary support is removed.

Two options for temporary support are available. The bridge may be closed to traffic for the duration of the pier replacement, which reduces the size and complexity of the temporary shoring and improves access for

corrosion control, deck replacement, and other work on the bridge. As an alternate the bridge can remain open to traffic in one or both directions. This increases the loads on the temporary shoring. Traffic should be halted while truss loads are shifted from the existing pier to the temporary shoring, and again when loads are shifted from the temporary shoring back to the new pier.

The advantages of the replacement concept is that the bearings are returned to the original location, which provides more capacity for pier movement and bearing adjustments as the soils continue to move. A new micropile foundation using vertical piles may be less susceptible to tilting, and the existing battered piles will no longer affect the pier. The existing cracked wall between pier columns will be replaced.

The original bearings may be retained, which preserves the historic fabric of the bridge, or may be replaced with modern bearings that can better accommodate ongoing movement of Pier 6. The shape of the exposed portion of the pier columns is unchanged, which minimizes visual effects.

Disadvantages are the cost of temporary shoring and the cost of pier removal. The cost of the new pier is somewhat greater than the cost of the collar necessary for underpinning. Traffic will be affected while the truss loads are shifted between the pier and the temporary shoring, although this will be moot if the bridge is already closed for deck replacement. The new pier will be constructed to match the original in shape and materials.

Overall, the replacement of Pier 6 to address the movement and tilt is the preferred method of addressing these issues over pier underpinning.

6.2.2 Truss Corrosion Protection

The truss currently has sufficient strength to carry the design loads. Ongoing corrosion is resulting in pits in members and in gusset plates, and in pack rust at splice plates and gusset plates. Continued corrosion will affect the capacity of the trusses.

This alternative includes complete repainting of the truss spans, including the trusses and the steel floor system. Painting includes cleaning of corrosion pits, and includes raking pack rust from connections and caulking the gaps created by the pack rust.

A part of the corrosion protection is sealing the truss member perforations to exclude pigeons, and providing drains in the lower chord gusset connections to minimize standing water.

Repair of gusset stiffeners is included. Where stiffener to gusset welds have cracked, remove the stiffener, grind the welds smooth, and bolt new stiffeners to the gusset prior to painting the bridge.

The bridge can remain open to traffic while the corrosion protection is completed. Some lane closures will be required for protection of workers, to allow access to the structure, and to avoid working directly over traffic.

6.2.3 Approach Span Bent Columns

The approach span bents will be re-plumbed. This requires drilling new holes in the bottom flanges of the girders to accommodate the revised location of the columns, and lifting the superstructure off of the bents columns while the bents are adjusted as shown in Figure 4-1.

Traffic on the eastbound lanes should be closed while the eastbound bents are adjusted, but traffic may continue to use the westbound lanes. Likewise, traffic on the westbound lanes should be closed while the bents under the westbound lanes are adjusted but traffic con use the eastbound lanes.

6.2.4 Abutment Bearings

Additional longitudinal restraint will be provided at the west abutment. This restraint may consist of a fabricated steel anchor, bolted to the existing abutment and connected to the ends of the existing approach span girders, or of reinforced concrete pedestals with fabricated steel anchors connected to the existing girders. This is shown in Figure 5-2.

Work on the abutment bearings can be completed without affecting traffic on the bridge.

6.2.5 Pin and Hanger Replacement

All horizontal pins and the hangers will be replaced. Higher-strength pins will be used, and the hanger elements will be made larger. This is shown in Figure 5-3.

This component increases the reliability of the bridge by minimizing the potential for progressive collapse of the approach spans. The type of connection remains the same, and so the visual effect of the modification on the historic nature of the bridge is minimal.

6.2.6 Deck Replacement

The existing deck is deteriorating. This alternative includes replacement of the existing deck with a new 9-inch-thick reinforced concrete deck. Evaluation of capacity for the thicker deck will be required and consideration of lighter weight deck options may be necessary. The existing bridge rails, which are integral with the deck, will also be replaced. Corrosion protection for the deck will be included in accordance with MnDOT and NDDOT current practice.

Replacement of the bridge deck can be done with the entire bridge closed, or traffic can be maintained on half of the bridge while the other half is under reconstruction. Given the close proximity of the two halves of the bridge, there are safety and convenience advantages to closing the entire bridge. These advantages should be balanced with maintenance of traffic needs, and with other work items being completed.

Implementation of deck replacement with pier replacement provides an advantage. The pier replacement can be scheduled to be completed while the deck is removed from the truss and from the adjacent approach span, which reduces the dead and live load demand on the temporary shoring required for the pier replacement.

6.3 Rehabilitation Alternative 2B—Addition of Shared-Use Path Outside Truss

Alternative 2B—Addition of Shared-Use Path meets the primary need of the project, which is to provide a structurally sound bridge, addresses the secondary need of maintaining the river crossing and connectivity of the U.S. Trunk Highway system, and addresses the secondary need to improve pedestrian and bicycle connectivity. Actions that maintain the bridge include replacement of the bridge deck, and increasing the reliability of the pin and hanger connections in the approach spans.

Structural deficiencies that put the bridge itself at risk are addressed in this alternative. These are the same as proposed for Alternative 2A. The only difference between Alternative 2A and Alternative 2B is the addition of the shared-use path outside the trusses and adjacent to the approach spans.

6.3.1 Replace Pier 6

Pier 6 has moved and tilted, as described in the Technical Memorandum: Pier 6 Movement Capacity. Movement of Pier 6 can be mitigated by underpinning the pier by installing new piles and connecting these new piles to the existing pier columns, or by completely replacing the pier. This alternative includes replacing the Pier. For details of this component, refer to Section 6.2.1.

Overall, the replacement of Pier 6 to address the movement and tilt is the preferred method of addressing these issues over pier underpinning.

6.3.2 Truss Corrosion Protection

The truss currently has sufficient strength to carry the design loads. Ongoing corrosion is resulting in pits in members and in gusset plates, and in pack rust at splice plates and gusset plates. Continued corrosion will affect the capacity of the trusses.

This alternative includes complete repainting of the truss spans, including the trusses and the steel floor system. Painting includes cleaning of corrosion pits, and includes raking pack rust from connections and caulking the gaps created by the pack rust.

For details of this component, refer to Section 6.2.2.

6.3.3 Approach Span Bent Columns

The approach span bents will be re-plumbed. This requires installation of new holes in the bottom flanges of the girders to accommodate the revised location of the columns, and lifting the superstructure off of the bents columns while the bents are adjusted.

For details of this component, refer to Section 6.2.3.

6.3.4 Abutment Bearings

Additional longitudinal restraint will be provided at the west abutment. This restraint may consist of a fabricated steel anchor, bolted to the existing abutment and connected to the ends of the existing approach span girders, or of reinforced concrete pedestals with fabricated steel anchors connected to the existing girders. This is shown in Figure 5-2.

Work on the abutment bearings can be completed without affecting traffic on the bridge.

6.3.5 Pin and Hanger Replacement

The pins and the hangers will be replaced. Higher-strength pins will be used, and the hanger elements will be made larger. For details of this component, refer to Section 6.2.5.

6.3.6 Deck Replacement

The existing deck is deteriorating. This alternative includes replacement of the existing deck with a new 9-inch-thick reinforced concrete deck. The existing bridge rails, which are integral with the deck, will also be replaced. Corrosion protection for the deck will be included in accordance with MnDOT and NDDOT current practice.

Overall, deck replacement is the preferred method of addressing the deterioration issues since deck rehabilitation now would still require an eventual replacement.

For details of this component, refer to Section 6.2.6.

6.3.7 Shared-Use Path

A new path may be attached to the outside of the existing truss. This concept is shown in Figure 5-10.

The path shown in Figures 5-9 and 5-10 incorporates a 12-foot-wide path, separated from the truss by two feet. At the bridge approach spans, a conventional slab and girder deck system is proposed.

This component has the advantage of providing a safe and comfortable pedestrian facility. Disadvantages include potential interference with the inspection equipment used to perform maintenance on and inspect the bridge.

6.4 Rehabilitation Alternative 2C—Addition of Shared-Use Path Inside Truss

Alternative 2C—Addition of Shared-Use Path meets the primary need of the project, which is to provide a structurally sound bridge, addresses the secondary need of maintaining the river crossing and connectivity of the U.S. Trunk Highway system, and addresses the secondary need to improve pedestrian and bicycle connectivity. Actions that maintain the bridge include replacement of the bridge deck, and increasing the reliability of the pin and hanger connections in the approach spans.

Structural deficiencies that put the bridge itself at risk are addressed in this alternative. These are the same as proposed for Alternative 2A. The only difference between Alternative 2A and Alternative 2C is the addition of the shared-Use path inside the trusses and within the existing bridge deck at the approach spans.

6.4.1 Replace Pier 6

Pier 6 has moved and tilted, as described in the Technical Memorandum: Pier 6 Movement Capacity. Movement of Pier 6 can be mitigated by underpinning the pier by installing new piles and connecting these new piles to the existing pier columns, or by completely replacing the pier. This alternative includes replacing the Pier. For details of this component, refer to Section 6.2.1.

Overall, the replacement of Pier 6 to address the movement and tilt is the preferred method of addressing these issues over pier underpinning.

6.4.2 Truss Corrosion Protection

The truss currently has sufficient strength to carry the design loads. Ongoing corrosion is resulting in pits in members and in gusset plates, and in pack rust at splice plates and gusset plates. Continued corrosion will affect the capacity of the trusses.

This alternative includes complete repainting of the truss spans, including the trusses and the steel floor system. Painting includes cleaning of corrosion pits, and includes raking pack rust from connections and caulking the gaps created by the pack rust.

For details of this component, refer to Section 6.2.2.

6.4.3 Approach Span Bent Columns

The approach span bents will be re-plumbed. This requires installation of new holes in the bottom flanges of the girders to accommodate the revised location of the columns, and lifting the superstructure off of the bents columns while the bents are adjusted.

For details of this component, refer to Section 6.2.3.

6.4.4 Abutment Bearings

Additional longitudinal restraint will be provided at the west abutment. This restraint may consist of a fabricated steel anchor, bolted to the existing abutment and connected to the ends of the existing approach span girders, or of reinforced concrete pedestals with fabricated steel anchors connected to the existing girders. This is shown in Figure 5-2.

Work on the abutment bearings can be completed without affecting traffic on the bridge.

6.4.5 Pin and Hanger Replacement

The pins and the hangers will be replaced. Higher-strength pins will be used, and the hanger elements will be made larger. For details of this component, refer to Section 6.2.5.

6.4.6 Deck Replacement

The existing deck is deteriorating. This alternative includes replacement of the existing deck with a new 9-inch-thick reinforced concrete deck. The existing bridge rails, which are integral with the deck, will also be replaced. Corrosion protection for the deck will be included in accordance with MnDOT and NDDOT current practice.

Overall, deck replacement is the preferred method of addressing the deterioration issues since deck rehabilitation now would still require an eventual replacement.

For details of this component, refer to Section 6.2.6.

6.4.7 Shared-Use Path

Provision for pedestrians and bicycles can be made within the limits of the existing bridge deck. This concept is shown in Figure 5-8.

SECTION 7

Evaluation of Alternatives

This section provides the evaluation criteria by which the alternatives for rehabilitation can be compared. This is followed by an assessment of the alternatives presented with an initial ranking of how effectively the various criteria are satisfied. This assessment is based on the conceptual level of this Study and is not the more comprehensive historic bridge rehabilitation study involving Section 106 or the application of the Secretary of the Interior's Standards. The more detailed assessment will be made during a future project when designs of the proposed improvements will be developed.

Each alternative satisfies the Purpose and Need for the project. Evaluation of the alternatives may be based on factors such as level of service for traffic, safety of vehicular and pedestrian traffic, effect on traffic during construction, construction cost, effect on bridge maintenance, and degree of effect on the historic fabric of the bridge.

While each alternative meets the minimum requirements of each evaluation criterion, the alternatives vary in the level of performance under each criterion. None of the criteria present a pass/fail test, but instead make each alternative more or less favorable.

7.1 Evaluation Criteria

7.1.1 Primary Needs Addressed

The Primary Need identified in the Purpose and Need Statement is to continue to maintain a structurally sound crossing at this location.

7.1.2 Level of Service for Traffic

Level of service refers to the accommodation of projected traffic volumes. Better alternatives provide more travel lanes for vehicles to move through the corridor. Other factors in analysis include base free flow speed, lane width, lateral clearance, roadway type, access points, truck and bus traffic, terrain and driver familiarity, but have lesser impacts to the overall level of service.

7.1.3 Bike/Pedestrian Accommodation and Safety

No provision for bicycles and pedestrians is provided on the existing bridge. Better alternatives provide bike and pedestrian accommodations, preferably with wider travel widths and buffer space to vehicles.

7.1.4 Construction Impact on Traffic

All construction will restrict traffic on the bridge. Better alternatives will reduce delays by motorists. Consider the total delay over the construction duration, rather than the delay at a particular time. Thus there is a potential that an extended delay of a few vehicles may be more desirable than a brief delay that affects many vehicles.

No traffic modeling has been conducted. Evaluation is based on qualitative assessment of effects on traffic.

7.1.5 Future Maintenance and Inspection

The bridge must be inspected and maintained. Better alternatives allow for inspection of the truss, access for maintenance of the truss, and reduced amount of maintenance and repair of components such as expansion joints, bearings, coatings, and railing.

7.1.6 Risk of Section 106 Adverse Effect

The Kennedy Bridge is eligible for the National Register of Historic Places under Criterion C (design and construction) in the area of Engineering, and under Criterion A (broad patterns of history) in the area of Transportation. Better alternatives minimize the effect of proposed actions on the features that make the

bridge eligible, and also on the overall historic fabric of the bridge. Better alternatives include provisions to protect and preserve the structure.

7.1.7 Construction Cost

The cost of construction is an evaluation criterion. Normal maintenance costs do not affect the life cycle costs significantly, so evaluation will address primarily the construction costs.

7.2 Rehabilitation Alternative 1—Minimal Rehabilitation

7.2.1 Primary Needs Addressed

Alternative 1 scores Poor on this criterion as the existing bridge deck, which has reached the end of its service life, is not replaced.

7.2.2 Level of Service for Traffic

Alternative 1 provides a level of service that matches the existing. There is no change in the level of service.

7.2.3 Bike/Pedestrian Accommodation and Safety

Alternative 1 scores Poor on pedestrian accommodation and safety. Safety hazards associated with bicycles and pedestrians using the bridge remain.

7.2.4 Construction Impact on Traffic

Alternative 1 scores Low on impact on traffic, as the deck is not currently replaced. Some lane closures are necessary for work on approach bents. Only temporary (a few hours at a time) closures are necessary for work on Pier 6.

7.2.5 Future Maintenance and Inspection

Alternative 1 has no effect on bridge inspection. It scores Very Poor on bridge maintenance because the bearings at Pier 6 still require periodic adjustment, and that adjustment becomes more difficult as the pier continues to move. Existing expansion joints and aluminum bridge rails remain, and these elements require more maintenance than do modern rails and joints.

7.2.6 Risk of Section 106 Adverse Effect

Alternative 1 scores Low on potential adverse effect under Section 106. Several changes to historic fabric are contemplated but with careful design the cumulative impact should not substantially diminish the historic integrity of the bridge. The negative features are that the trusses get no additional protection from vehicle impact, and Pier 6 is expected to experience continued cracking and deterioration.

7.2.7 Construction Cost

Alternative 1 has a projected construction cost of approximately $3.8 million. This cost does not include the cost of deck replacement, which will be required in approximately ten years.

7.3 Rehabilitation Alternative 2A—Moderate Rehabilitation

7.3.1 Primary Needs Addressed

Alternative 2A scores Good on this criterion, as a structurally sound crossing is maintained.

7.3.2 Level of Service for Traffic

Alternative 2A provides a level of service that matches the existing. There is no change in the level of service, and the level of service is Good.

7.3.3 Bike/Pedestrian Accommodation and Safety

Alternative 2A scores Poor on pedestrian accommodation and safety, as it provides no pedestrian facilities. Safety hazards associated with bicycles and pedestrians using the bridge remain.

7.3.4 Construction Impact on Traffic

Alternative 2A scores Moderate on impact on traffic during construction. Traffic will be restricted to two lanes for the duration of the bridge deck replacement.

7.3.5 Future Maintenance and Inspection

Alternative 2A has no effect on bridge inspection. It scores Good on inspection and maintenance because it provides a new deck and new transverse bridge joints, and eliminates the longitudinal joint at the truss spans. Pier 6 is replaced with a new pier that requires less maintenance. The aluminum bridge rails are replaced.

7.3.6 Risk of Section 106 Adverse Effect

Alternative 2A scores Moderate on potential adverse effect under Section 106. The existing Pier 6 is replaced in kind. Other original components such as the deck, railing, and pins and hangers are replaced, in addition to other changes to historic fabric. If the longitudinal joint at the approach spans is eliminated, part of the engineering technology intended to accommodate the soil movement (a character-defining feature) would be lost.

7.3.7 Construction Cost

Alternative 2A has a projected construction cost of $13.4 million. Costs are increased over those of Alternative 1, as a result of replacing Pier 6, pin and hanger connections, and the bridge deck.

7.4 Rehabilitation Alternative 2B—Addition of Shared-Use Path Outside Truss

7.4.1 Primary Needs Addressed

Alternative 2B scores Moderate with respect to addressing the primary need of maintaining a structurally sound crossing. The path structure on the outside of the truss interferes with inspection and maintenance of the truss, which lowers the score of this alternative.

7.4.2 Level of Service for Traffic

Alternative 2B provides a level of service that matches the existing. There is no change in the level of service.

7.4.3 Bike/Pedestrian Accommodation and Safety

Alternative 2B scores Very Good regarding pedestrian accommodation and safety, as a completely separate bicycle and pedestrian facility is provided.

7.4.4 Construction Impact on Traffic

Alternative 2B scores Moderate on impact on traffic during construction. Traffic will be restricted to two lanes for the duration of the bridge deck replacement. Construction of the external path will extend the duration of lane closures beyond that required for the deck replacement alone.

7.4.5 Future Maintenance and Inspection

Alternative 2B scores Poor on bridge inspection and maintenance. The path outside of the truss makes it very difficult to get access for inspection or maintenance. The positive aspects of a new deck, deck joints, rails, and Pier 6 are the same as for Alternative 2S.

7.4.6 Risk of Section 106 Adverse Effect

Alternative 2B has High potential for Section 106 adverse effect. Adding an external path would introduce a substantial new structure that changes the mass and scale of the bridge and blocks views of the bridge's south side.

7.4.7 Construction Cost

The estimated construction cost of Alternative 2B is approximately $16.4 million to $17.4 million.

7.5 Rehabilitation Alternative 2C—Addition of Shared-Use Path Inside Truss

7.5.1 Primary Needs Addressed

Alternative 2C scores Good on this criterion, as a structurally sound crossing is maintained.

7.5.2 Level of Service for Traffic

Alternative 2C maintains the current level of service, resulting in a score of Good.

7.5.3 Bike/Pedestrian Accommodation and Safety

Alternative 2C has a Good score with respect to bicycle and pedestrian accommodation and safety. Provision is made for bicycles and pedestrians.

7.5.4 Construction Impact on Traffic

Alternative 2C scores Moderate on impact on traffic during construction. Traffic will be restricted to two lanes for the duration of the bridge deck replacement.

7.5.5 Future Maintenance and Inspection

Alternative 2C has no effect on bridge inspection. It scores Good on inspection and maintenance because it provides a new deck, new transverse bridge joints, new bridge rail, and eliminates the longitudinal joint at the truss spans. Pier 6 is replaced with a new pier that requires less maintenance.

7.5.6 Risk of Section 106 Adverse Effect

Alternative 2C scores Moderate on potential adverse effect under Section 106. Pier 6 is replaced in kind. Other original components such as the deck, rail, and pins and hangers are replaced, in addition to other changes to historic fabric. If the longitudinal joint at the approach spans is eliminated, part of the engineering technology intended to accommodate the soil movement (a character-defining feature) would be lost.

7.5.7 Construction Cost

Alternative 2C has an estimate construction cost of $13.5 million. Costs are similar to those of Alternative 2A, but it provides pedestrian accommodations at a very low increment in construction cost.

TABLE 7-1

Rehabilitation Alternatives Preliminary Cost Estimate

Component	Item Cost	Alternative 1	Alternative 2A	Alternative 2B	Alternative 2C
		Minimal Rehabilitation	Moderate Rehabilitation	Add Shared-Use Path	
Underpin Pier 6	$1,105,000	$1,105,000	-	-	-
Replace Pier 6	$1,560,000	-	$1,560,000	$1,560,000	$1,560,000
Protect Trusses from Corrosion	$2,000,000	$2,000,000	$2,000,000	$2,000,000	$2,000,000
Adjust Approach Span Bent Columns	$390,000	$390,000	$390,000	$390,000	$390,000
Reinforce Abutment Bearings	$65,000	$65,000	$65,000	$65,000	$65,000
Monitor Pins and Hangers	$50,000	$50,000	-	-	-
Replace Pins and Hangers	$500,000	-	$500,000	$500,000	$500,000
Maintain Deck and Railings	$200,000	$200,000	-	-	-
Replace Deck and Railings	$8,750,000	-	$8,750,000	$8,750,000	$8,750,000
Add Shared-Use Path (External to Truss)	$3,000,000	-	-	$3,000,000 to $4,000,000	-
Add Shared-Use Path (Internal to Truss)	$130,000	-	-	-	$130,000
	Total	$3,800,000	$13,300,000	$16,300,000 to $17,300,000	$13,400,000

TABLE 7-2
Description and Evaluation of Rehabilitation Alternatives

	Component	Alt. 1 Minimal Rehab (1)	Alt. 2A Moderate Rehab (2)	Alt. 2B Moderate Rehab—Add Bike/Ped Path (3)	Alt. 2C Moderate Rehab—Add Bike/Ped Path (3)
Description	Underpin Pier 6 (stabilize foundation)	X			
	Replace Pier 6 (replace foundation)		X	X	X
	Protect Trusses from Corrosion	X	X	X	X
	Adjust Approach Span Bent Columns	X	X	X	X
	Reinforce Abutment Bearings	X	X	X	X
	Monitor Pins and Hangers	X			
	Replace Pins and Hangers		X	X	X
	Maintain Deck and Railings	X			
	Replace Deck and Railings (4)		X	X	X
	Add Shared-Use Path (External to Truss)			X	
	Add Shared-Use Path (Internal to Truss)				X
Evaluation	Primary Needs Addressed	Poor	Good	Moderate	Good
	Level of Service for Traffic	Good	Good	Good	Good
	Bike/Pedestrian Accommodation & Safety	Poor	Poor	Very Good	Good
	Construction Impact on Traffic	Low	Moderate	Moderate	Moderate
	Future Maintenance & Inspection	Very Poor	Good	Poor	Good
	Risk of Section 106 Adverse Effect	Low	Moderate	High	Moderate
	Construction Cost (bridge elements only)	$3.8 M	$13.4 M	$16.4-$17.4 M	$13.5 M

Notes:
1. Deck replacement is needed to address the primary long-term need, to maintain the vehicular river crossing.
2. Moderate bridge rehabilitation is superior to serve the primary long-term need. A major bridge rehabilitation, involving replacement or addition of steel truss members, is not considered necessary.
3. Alternative 2C is technically the same as 2A except 2C adds the bike/pedestrian accommodations internal to the truss.
4. Shear connectors to be added to the truss stringers shall be included in deck and railing replacement.

SECTION 8

Performance Monitoring

Health monitoring of bridges is the process of damage detection and characterization, with the intent of obtaining early warning of deterioration. Damage is defined as changes to the material properties or to the geometric properties of a structural system that adversely affect the system's performance.

Health monitoring can take many forms, ranging from real-time monitoring of characteristics with alerts programmed when pre-selected parameters are exceeded, to simplistic benchmarks measured during routine inspections. Examples of real-time health monitoring include transducers set to recognize the acoustic signature of steel crack initiation, vibration monitoring, deflection monitoring, and reinforcement corrosion potential measurements. Real-time data can be stored on site for periodic retrieval and use, or continuously transmitted to a monitoring site. Continuous monitoring is appropriate when conditions may change from being acceptable to being unacceptable quickly, and where transient internal signals from events such as crack initiation are of interest.

Examples of more simple health monitoring activities include crack gauges monitored on a regular basis, and benchmarks installed for easy repeatability of measurements. The stringline currently used at Pier 6 to track pier distortion is an example of a simple health monitoring system. Systems monitored at discrete intervals are appropriate when conditions are expected to change slowly.

Health monitoring of the Kennedy Bridge is recommended. Parameters that may warrant monitoring are as follows.

8.1 Approach Bent Movement

The foundations that support the steel supporting bents at the bridge approaches are known to be moving relative to the superstructure. This movement results in tilted bents. Tilting of the bents induces horizontal loads at the girder bearings at the abutments, and in the vertical pins connecting approach superstructure segments.

Excessive tilting of the bents can result in failure of the girder bearings at the abutments, failure of the vertical pins between approach span segments, or failure of the bolted connections at the top or bottom of the bents. Any of these failures could result in collapse of the bridge approach.

Movement of the foundations results from a slow movement of the soils in which the foundations are embedded. Changes in condition will occur gradually, indicating that periodic measurement of changes is appropriate.

8.1.1 Current Practice

Current practice is to qualitatively observe the deviation of the bents from vertical, or tilt. Records of tilt are not kept, so the locations and the rate of change of the tilt cannot be assessed. Also, the specific movement causing the tilt is not assessed. In other words, observations to date do not allow determination of the contribution to the tilt resulting from individual bent foundation movement versus the movement of the superstructure itself.

8.1.2 Recommendations

Recommended health monitoring consists of tracking the total movement of each bridge approach component in space. Measurements should be made annually. Accumulation of total movement records will allow interpretation of both the source of bent tilt and the rate at which the bridge is moving. These records will allow interpretation of the significance of the bridge movement.

Four points on each abutment, four points on each superstructure span, and four points on each approach bent should be recorded. Noting that each approach structure is separated by a longitudinal joint, a total of

78 control points on the west approach and 92 control points on the east approach may be monitored. Coordinates in three dimensions (north, east, and vertical) should be recorded.

Measurements can be made using conventional survey techniques, or by laser scanning. Laser scanning is recommended for this project, as the desired points can be obtained very quickly. Laser scanning has the additional advantage of accumulating additional geometric data, such as ground surfaces, that may be useful in interpreting the results.

Monitoring total movements requires installation of high-quality reference points. Points within State rights-of-way far enough from the bridge to be unaffected by Red River soil movement should be used.

8.2 Piers 6, 7, and 8 Movement

Pier 6 has a history of significant movement. The top of the pier at the south side of the bridge has moved two feet relative to the steel truss, and the footing may have moved between three and four feet from its original position.

Pier 7 and Pier 8 are detailed to permit movement relative to the steel truss superstructure. Movement to date, if any has occurred, is small.

8.2.1 Current Practice

MnDOT has been tracking movement of Pier 6 for several years. Measurements have included relative distance between the adjacent approach bent foundation, movement of the top of the pier relative to the steel truss, tilt of the pier, and distortion of the concrete wall between the columns of Pier 6.

No measurements of vertical movement of any of the three piers has been recorded. No measurements of movement perpendicular to the bridge (north – south direction) have been recorded.

8.2.2 Recommendations

Recommended health monitoring consists of tracking the total movement of each bridge pier in space. A minimum of four points on each pier should be recorded in order to identify both movement and distortion of the piers.

As for the approach spans, use of laser scanning to acquire data is recommended. Laser scanning allows location of critical points without the need for traffic control or getting physical access to the necessary control points.

8.3 Deformation of Piles at Pier 6

The pile-supported footing at Pier 6 has moved toward the river, and has tilted. This tilt implies that the piles have distorted. The extent of pile curvature and effect of the curvature on the axial capacity of the piles is not known.

8.3.1 Current Practice

Slope inclinometers have been in place adjacent to the south end of Pier 6 since June of 2004. One slope inclinometer tube was sheared off in 2010, and was replaced. These instruments provide information about the movement profile of the soil at Pier 6.

No specific estimate of the capacity of the piles has been prepared. Assumptions of the pile head movement combined with the soil movement from the slope inclinometers allows estimation of the pile deformation, but there is no way to confirm the accuracy of such an analysis.

8.3.2 Recommendations

New micropiles are proposed for the foundations of Pier 6, whether the selected rehabilitation underpins the existing footings or whether the pier is completely replaced. The micropiles can be instrumented to determine stresses in the piles.

Micropiles consist of steel pipe filled with concrete, and normally include a central high-strength reinforcement bar. Two options for instrumenting the micropiles are available.

One option consists of installing strain gages on the micropile shell. These strain gages can provide the localized strain of the pile material, and from that information the curvature and stress in the pile can be determined.

The number of strain gages necessary to provide meaningful results is high. A minimum of three gages is required at any point in the pile in order to determine the maximum curvature and stress, and gages should be installed at many locations along the pile length in order to capture the behavior of the pile. Strain gages rely on the integrity of the electrical connections between the sensors and the instrumentation, and it is likely that failure of the gages or the wiring will degrade the monitoring system over time.

A second option consists of embedding slope inclinometer tubes into the micropiles. Standard slope inclinometer instruments can then be used to determine the displacement and curvature of the piles.

Installation of slope inclinometer tubes requires a minimum of 10-inch diameter pipe for the micropiles. Inclinometer tubes are recommended for two micropiles at each side of Pier 6, for a total of four tubes. Only one tube at each side of Pier 6 is necessary to provide readings, but a second tube provides redundancy in the event that a tube becomes unusable.

Both options have the potential to provide the data necessary. The slope inclinometer option is expected to be both more robust and less costly, and is the preferred option.

8.4 Steel Cracks

Several steel components of the structure are considered non-redundant, which puts the structure at risk in the event that cracks form in the steel. Non-redundant structures require a higher level of inspection than do redundant structures.

A crack in a plug weld attaching the low-alloy steel gusset plates to the non-redundant bottom chords at panel point L-1/2S of the east truss span were observed in 2009. This crack was ground out in 2009, and determined to be contained in the gusset plate and did not extend into the chord. Magnetic particle testing (MT) of the area in 2011 and 2013 revealed no additional cracking.

The pin nuts at the pin and hanger joints in the substructures are track welded to the hanger members. Cracks in these tack welds have been observed; non-destructive testing of the pins and visual inspection of the hangers reveals no defects in the pins or hangers.

8.4.1 Current Practice

MnDOT currently performs in-depth fracture critical bridge inspections in accordance with the National Bridge Inspection Standards. This includes arms-length visual inspection of all fracture-critical components. Non-destructive testing, including ultrasonic testing and magnetic particle testing, is performed where indicated.

8.4.2 Recommendations

Health monitoring technology is available to detect cracks in steel members. Two basic technologies include acoustic emissions monitoring, in which the sound of crack initiation is detected, and ultrasonic excitation, which is the same technology commonly used for weld inspection. However, application and calibration of these technologies to specific bridge member configurations is complicated, as is maintenance of these systems after installation. These are generally limited to areas where access is difficult, where members must be partially disassembled for inspection, or where the risk is exceptionally high.

The Kennedy Bridge is relatively easy to inspect, and installation of health monitoring systems will not obviate the need for fracture critical inspection. Investment in the cost of design, installation, and maintenance of health monitoring of steel members for detection of cracks is not recommended.

SECTION 9

Summary

This technical memorandum provides background information, the purpose and primary need for improvements, and rehabilitation alternatives for the Kennedy Bridge. The rehabilitation alternatives are reviewed addressing structural, geotechnical, traffic and construction concerns. Structural concerns include redundancy, long term maintenance, repair of elements in distress, and construction methods. Geotechnical and traffic concerns include the ongoing sloughing of the river banks and maintaining traffic during construction. The statements regarding historic concerns are preliminary and a later evaluation will follow the comprehensive Section 106 process and protocols of MnDOT and other agencies.

Opinions of probable construction costs and durations are presented for the rehabilitation alternatives. Advantages and disadvantages of each component and alternative are also discussed and compared against one another. Additional project development topics, beyond the technical focus of this memorandum, will be covered in the Final Report.

This technical evaluation of rehabilitation alternatives in this Study found that because of the generally good condition of most components of the existing bridge and reasonable alternatives for addressing known deficiencies, rehabilitation is feasible for the Kennedy Bridge. The decision on whether or not rehabilitation is the next step will be made by MnDOT and NDDOT, with input from other stakeholders, after evaluating the Study findings including estimate of probable costs, environmental factors and other project impacts.

The findings of this Study demonstrate that bridge rehabilitation is technically feasible and this remains a viable option for future project development.

SECTION 10

References

American Engineering Testing, Inc. 2012. *Asbestos and Regulated Waste Survey Report, Bridge No.: 9090*. November 2012

Federal Highway Administration (FHWA). 2011. *Technical Advisory: Inspection of Fracture Critical Bridges Fabricated from AASHTO M270 Grade 100 (ASTM A514/A517) Steel*. September 12.

Minnesota Department of Transportation (MnDOT)—Bridge Office. 2011. *Technical Advisory—Updates to September 26, 2011 Response*. October 7.

MnDOT. 2014. *MnDOT Road Design Manual*.

Appendix A
Existing Bridge Plans

Printed copy does not include Appendix A, Existing Bridge Plans. See separate pdf files.

Appendix B
Bridge Inspection Reports

Mn/DOT BRIDGE INSPECTION REPORT

Inspected by: DISTRICT 2

BRIDGE 9090 US 2 OVER RED RIVER INSP. DATE: 06-06-2013

County: POLK
City: EAST GRAND FORKS
Township:
Section: 02 Township: 151NN Range: 50W
Span Type: STEEL HIGH TRUSS

Location: AT N DAKOTA STATE LINE
Route: USTH 2 Ref. Pt.: 000+00.000
Control Section: 18 Maint. Area: 2B
Local Agency Bridge Nbr:

Length: 1,261.0 ft
Deck Width: 65.0 ft
Rdwy. Area / Pct. Unsnd: 70,611 sq ft 10 %
Paint Area/ Pct. Unsnd: 183,102 sq ft 5 %
Culvert N/A

NBI Deck: 5 Super: 6 Sub: 4 Chan: 6 Culv: N

Open, Posted, Closed: OPEN

Appraisal Ratings - Approach: 7 Waterway: 6

MN Scour Code: L-STBL;LOW RISK Def. Stat: S.D. Suff. Rate: 48.2

Required Bridge Signs - Load Posting: NOT REQUIRED Traffic: NOT REQUIRED
Horizontal: OBJECT MARKERS Vertical: NOT REQUIRED

STRUCTURE UNIT: 0

ELEM NBR	ELEMENT NAME	ENV	INSP. DATE	QUANTITY	QTY CS 1	QTY CS 2	QTY CS 3	QTY CS 4	QTY CS 5
22	LS O/L (CONC DECK)	2	06-06-2013	81,185 SF	0	81,185	0	0	0
			05-14-2012	81,965 SF	0	81,965	0	0	0

Notes: |Cracks in overlay at west finger jt. Small spall in median concrete on bottom side @ E. abut. br/wall w/rbar exposed. Major deterioration of overhangs w/rust staining on approach spans underside. Concrete spalling at the ends of many floorbeams.There appears to be a dip at the joint above the second bent from the west.**Repaired approx 12 sq. of delam concrete at west end EBL. on 8/08. DSH
Epoxied deck cracks GK 5/2012
2013: No significant change in condition. Quantity reduced to reflect area of 6' deck slabs on each end of bridge.|

48	LS O/L (CONC SLAB)	2	06-06-2013	780 SF	0	780	0	0	0
			05-14-2012	780 SF	0	780	0	0	0

Notes: |This element reflects the 6' approach spans between the abutments and the bearings at each end of the bridge; both in CS2 due to spall and cracks on the sides and undersides of the slabs.|

300	STRIP SEAL JOINT	2	06-06-2013	700 LF	689	0	11	N/A	N/A
			05-14-2012	700 LF	621	79	0	N/A	N/A

Notes: |First two joints from the ND end in the E.B.L. are leaking above the centering pins and are causing them to Rust and deterioration of the paint system.
2013: 1 foot of gland is cut on each joint.|

301	POURED DECK JOINT	2	06-06-2013	1,400 LF	280	1,120	0	N/A	N/A
			05-14-2012	1,400 LF	280	1,120	0	N/A	N/A

Notes: |**Sealed jts./ pourable on 11/09. DSH
The poured joints located above the truss span floorbeams show evidence of leakage below (corrosion on the top flange of the floorbeams).FC 6/11
2013: No significant change.|

303	ASSEMBLY DECK JOINT	2	06-06-2013	1,260 LF	0	1,245	15	N/A	N/A
			05-14-2012	1,260 LF	630	630	0	N/A	N/A

Notes: |This element is to be used to describe the condition of the longitudinal median joint running along the full length of the bridge (installed in 1984). This is a 4” wide “cross linked ethylene vinyl acetate” joint material bonded to the concrete with epoxy. The joint has scattered areas of leakage (approximately half the length of the bridge)FC 6/11
2013: 15' in CS3 due to leakage at the transverse expansion joints.|

411	OPEN FINGER JOINT	1	06-06-2013	140 LF	140	0	0	N/A	N/A
			05-14-2012	140 LF	140	0	0	N/A	N/A

Notes: |Rubber diaphrams are deteriorating, there are leaks at 10 ft. and 30 ft. from the north in the NE gland that were repaired in 2009.This is not endangering any bearings. GK 5/18/10
2013: No significant change.|

321	CONC APPROACH SLAB	2	06-06-2013	2 EA	1	1	0	0	N/A
			05-14-2012	2 EA	2	0	0	0	N/A

Notes: |W.B.L. has been overlaid with bituminous.
2013: The west approach slab has a 28" x 2" spall forming at the centerline joint.|

Mn/DOT BRIDGE INSPECTION REPORT

Inspected by: DISTRICT 2

BRIDGE 9090 US 2 OVER RED RIVER INSP. DATE: 06-06-2013

STRUCTURE UNIT: 0

ELEM NBR	ELEMENT NAME	ENV	INSP. DATE	QUANTITY	QTY CS 1	QTY CS 2	QTY CS 3	QTY CS 4	QTY CS 5
333	RAILING - OTHER	2	06-06-2013	8,274 LF	6,798	1,470	6	N/A	N/A
			05-14-2012	8,274 LF	7,274	1,000	0	N/A	N/A

Notes: | Minor spalls in rails. Minor spall in South rail @ West end w/rbar exposed. Two rail anchor castings on the same post,.NE end have been hit & are broken. Several spalls on the bottom of the railposts.
8 ft. cracked @ the south rail, mid span, west truss.GK 5/18/10
The concrete rail bases have scattered areas of cracking, delamination, and spalling (mainly on the approach spans). The north rail in the west truss span (L3'-L4') has impact damage - the upper rail casting is bent and fractured.FC 6/11
2013: Horizontal cracks with staining in the majority of the concrete rail sections. Scattered spalls in the posts and lower portion of the horizontal railing. North side rail second section from the east end, the west end post is missing. North side rail 11th section from the west end, the horizontal metal rail is pushed to the north between the 2nd and 3rd posts. The surface treatment on the metal rail sections is primarily intact. All rail sections on the bridge were intact except on the north rail on the east approach, where 1 rail post is damaged and not intact. |

107	PAINTED STEEL GIRDER	2	06-06-2013	5,600 LF	3,320	2,000	280	0	0
			05-14-2012	5,600 LF	3,320	2,000	280	0	0

Notes: |Rust Beginning to Form. Several of the centerline rotational pins appear to be frozen due to corrosion. There is a bend in the bottom flange of the south fascia beam, span 12, no cracks present.
2003 FC Inspection:Several of the rotational pin assemblies appear to be frozen due to corrosion. Beams 1 and 2 (from the south) in span 2 have impact damage due to a high load hit. Magnetic Particle examination of those areas revealed no cracks.
2007 FC Inspection:The approach span beams are in relatively good condition, with the exception of some advanced corrosion of the bottom flange on some of the fascia beams.
See Notes and Pictures on file in the Engineers office. Some paink chalking and corrosion present. Joe F 6/25/09
Facia bottom flange continues to rust in approach spans at various locations. GK 5/2012
2013: No significant change.|

113	PAINT STEEL STRINGER	2	06-06-2013	4,464 LF	2,298	2,166	0	0	0
			05-14-2012	4,464 LF	2,298	2,166	0	0	0

Notes: |Rust Beginning to Form.
2003 FC Inspection:There is a square cope detail at the top of the web on all of the stringers, which is fatigue prone and should be monitored for cracking. There is scattered rust beginning to form on the stringers, but no areas of significant section loss.
2007 FC Inspection:There are isolated areas of paint failure and surface rust, but no pitting or section loss. The square cope detail shouldl still be monitored for cracks during in-depth inspections.
See Pictures and Notes on file in the engineers office.
2009 FC report, recommended changing the lin. ft. from 97 to 4464 , and quant 1 & 2 respectivly. GK 4/10
2013: No significant change.|

121	P/STL THRU TRUSS/BOT	2	06-06-2013	1,116 LF	0	780	220	116	0
			05-14-2012	1,116 LF	0	780	220	116	0

Notes: |Pack rust is forming at the gusset plates and batten plates on the bottom of both chords. The bolting plate @ the bottom of the 4th vert chord in the NW cor of the truss is twisted down approx 1in. where cross brace ties in. The cross brace coming into this plate is also twisted. 3 cross bracing hanger rods are bent. The X-bracing on the SW cor of truss is also bent. Bott chord boxes are infested with pigeons. Several interior welds of the lower chord box members were inspected after blasting & cleaning-no defects were noted. There are some nuts missing on diag bracing hanger rods. Two broken hanger rods 1 at MN (east) Pier, 1 at ND (west) pier.
2003 FC Inspection:There are scattered areas of surface pitting on the chords. There is minor section loss with moderate pitting at the bottom panel point connections on gusset plates and truss members (<5 %) Pack rust is forming at the gusset plates and batten plates on teh bottom of the chords.
There is some rust and some minor section loss beginning to form, elpecially along the curb line and at the bottom chord connections on the verticals and diagonals. The total area affected is less than 5%.
2007 FC Inspection:There are scattered areas of surface pitting on the chords. Magnetic particle was performed on the gusset plate to lower chord welds. A crack approx. 2" long was found on the at the L0 south side of the west truss. Consulted w/CO & was instructed to grind out crack and prime & apply Dow 888 to prevent rusting. Re-inspected in December 07 & again in March of 08. DSH.***Ground out crack was re-inspected on 11/19/07 by DSH and found to have no further propagation. No propagation on may 13th 2008.
See Pictures and Notes on the FC reports in engineers office.
2009 FC inspection: Pack rust, corrosion blisters, flaking rust and minor section loss on bottom chords and panel points. Joe F 6/25/2009
East truss, 3rd bay, no. side 1 wind bracing anchor rod snap

Mn/DOT BRIDGE INSPECTION REPORT

Inspected by: DISTRICT 2

BRIDGE 9090 US 2 OVER RED RIVER INSP. DATE: 06-06-2013

STRUCTURE UNIT: 0

ELEM NBR	ELEMENT NAME	ENV	INSP. DATE	QUANTITY	QTY CS 1	QTY CS 2	QTY CS 3	QTY CS 4	QTY CS 5
126	P/STL THRU TRUSS/TOP	2	06-06-2013	1,116 LF	540	516	60	0	0
			05-14-2012	1,116 LF	540	516	60	0	0

Notes: |Rust Beginning to Form. Minimal sect loss on top chord verticals & diagonals. Pigeons nesting in upper chord box members. There are broken welds on the angle stiffeners on top of the inside gusset plates (deck height) @ the 1st panel points W of the NE & SE end posts.**Bridge Maint. added angle iron stiffeners to all (8) Lo locations to the un-supported lengths, also the in-place stiffeners were repaired / installed where needed on 5/20/2010, (4) bolts that were missing on the East truss -no. side @ Lo location were replaced. DSH.** Bridge Maint. incorporated debris drains @ all (8) Lo locations in order to adequately flush areas that were not able to clean; this was done on 6/10/2010. DSH
2003 FC Inspection:The top chords are in good condition with only minor scattered areas of isolated paint loss and surface rust (<5 %). There is some rust and some minor section loss beginning to form, especially along the curb line and at the bottom chord connections on the verticals and diagonals. The total area affected is less than 5%.
2007 FC Inspection:No Significant shange from previous inspection. Verticals and Diagonals No significant changes.
2009 FC inspection: Corrosion blisters on top chords and panel points Joe F 6/25/2009.
Br. crew added /repaired stiffeners to some bottom chord gusset platesGK 5/18/10.
North side of west truss, vert. members are within 1/4 inch of conc. sidewalk slab, south side shows 1-2 inches of clearance.GK 5/18/10.
2013: No significant change. |

152	PAINT STL FLOORBEAM	2	06-06-2013	1,380 LF	0	620	620	140	0
			05-14-2012	1,380 LF	0	1,240	0	140	0

Notes: |Rust Beginning to Form. Top Flanges of the floor beams are rusting.
2003 FC Inspection:The floor beams are in generally good condition, with some scattered surface rust. Some of the floor beams are starting to develop pack rust at the chord connections.
2007 FC Inspection:There is minor scattered surface rust. Rust is forming on the top flanges where the deck is leaking. Pack rust continues to develop at the horizontal bracing gussets at the end of the floor beams but section loss is minimal. See Pictures and notes on file in the engineers office.
2009 FC inspection: Top flange corrosion on all floorbeams at ends and center joint; isolated section loss at lower flange connections to panel points Joe F 6/25/2009
Each Floorbeam has 17 stiffeners.Typical of these FB's is rust w/ minor sect. loss at the bottom of the 2 exterior stiffeners. East truss 4 th FB from Pier 7 "center pier" has an area of corrosion with sect loss 1/8 + inches on bottom flange 4 ft. from south lower truss chord.
2013: Moved 620' into CS3 due to corrosion on the top flanges due to deck leakage.|

422	PAINTED BEAM ENDS	1	06-06-2013	14 EA	10	2	0	2	0
			05-14-2012	14 EA	10	2	0	2	0

Notes: |There is some rust forming. 2009 FC inspection: Quantity changed to correspond to number of strip-seal and finger expansion joints.
Increased the element quantity by 2 to include the “splash zone” on the truss spans (one for north side and one for the south side). The truss splash zones should be rated as condition 4. FC 6/11
2013: No significant change.|

161	PIN & HANGER-PAINTED	2	06-06-2013	56 EA	0	56	0	0	0
			05-14-2012	56 EA	0	56	0	0	0

Notes: |Rust Beginning to Form. Crack in Tack Weld on Nut to Hanger bottom pin 4th beam from north, 4th bent from the east.
2003 ultrasonic with no indications.
2003 FC Inspection:Ultrasonic straight beam examination was performed on all of the pins, utilizing a Panametrics Epoch III protable flaw detector and a 1/2" diameter 5 Mhz normal beam transducer. The pins were checked from both ends. A signal was noted on most of the pins, emanation from the shoulder area. This signal location is not from a stressed area of the pin, and is probably caused by a machined chamfer in the shoulder (see figure 1) No crack indications were noted on any of the pins.
2007 FC Inspection:No change from previous inspection.
See Notes and Pictures on file in the Engineer's office.
2009 FC inspection: Several cracked tack welds between nut and hanger channel noted Full UT inspection of pin/hanger assemblies will be done in 2011 on 4 year cycle. Joe F 6/25/2009
Span 4, 2 cotter keys in pins are 1/2 broke off, but enough remaining that nut can not come loose.GK 5/18/10
Ultrasonic examination was performed on the hanger pins during the 2011 FC inspection (no significant findings). The pin & hanger assemblies all have minor surface corrosion (condition state 2) - they are all functioning as intended.FC 6/11.
2013: No significant change. NDT not required until next FC inspection. |

Mn/DOT BRIDGE INSPECTION REPORT

Inspected by: DISTRICT 2

BRIDGE 9090 US 2 OVER RED RIVER INSP. DATE: 06-06-2013

STRUCTURE UNIT: 0

ELEM NBR	ELEMENT NAME	ENV	INSP. DATE	QUANTITY	QTY CS 1	QTY CS 2	QTY CS 3	QTY CS 4	QTY CS 5
373	STEEL HINGE	2	06-06-2013	32 EA	0	32	0	0	0
			05-14-2012	32 EA	0	32	0	0	0

Notes: |This element should be used to describe the condition of the hinge bearings supporting the suspended spans (in approach spans #5 & 8). There are swivel hinges at the truss ends (Piers #6 & 8), with expansion hinges at the other end of Spans #5 & 8 (4 joints, total of 32 assemblies). The hinge assemblies all have minor surface corrosion (condition state 2) - they are all functioning as intended.FC 6/11
Close inspection of swivel jts in 2012 show no signs of problems. GK / RH 5/2012
2013: No significant change.|

423	GUSSET PLATE (PAINT)	1	06-06-2013	80 EA	0	36	44	0	0
			05-14-2012	80 EA	11	25	44	0	0

Notes: |** A (3) stage spot painting of gussets was completed in the week of 9/14/09. DSH
The bottom chord gusset plates have old pitting (painted over), with some active corrosion – all should be rated as condition state 3. Some of the upper chord gusset plates staining, surface corrosion, and isolated pitting (painted over).FC 6/11
2013: Quantity of 36 in CS2 due to minor corrosion starting to form on the interior surfaces of the gusset plates. |

380	SECONDARY ELEMENTS	1	06-06-2013	1 EA	0	1	0	0	N/A
			05-14-2012	1 EA	1	0	0	0	N/A

Notes: |2009 FC inspection: New element. Bottom gusset plates showing some corrosion and pack rust. Joe F 6/25/2009
2013: There is corrosion on the lower lateral braces and 2 hanger rods are broken.|

311	EXPANSION BEARING	2	06-06-2013	6 EA	0	4	2	N/A	N/A
			05-14-2012	6 EA	0	4	2	N/A	N/A

Notes: |SW rocker is tipped all of the way toward the west. East rockers tipped slightly to the E. Base plates 3rd Beam from the N.@ E. expansion jt. & 3rd Beam from S. on N side @ W. expansion all are fractured. West Pier rockers tipped away from river @ 40 degrees Base plate on No. one beam @ W. finger jt. also fractured on inside face. Bearings and pins need cleaning and greasing. Bearing holder plate is broken loose, crack between beam and Bearing Holder east finger Jt.
2003 FC Inspection:The Rocker bearing at the SouthWest corner of the west truss span is fully expanded. The remainder of the bearings appear to be functioning properly.
2007 FC Inspection:The Southwest bearing is now only slightly in expansion. No other changes were noted.
See Notes and Pictures on file in the Engineers office.
I went to 9090 on 03/24/09 at 40 degrees to observe the bearing configurations, below are the results.
Both West Rockers have been moved from the original Positions;
The southwest Rocker has been moved twice on the base, to the west 5 3/4" for a total of 11.5 inches. and moved once on top attachment to the lower chord, to the east 7".
There is room for additional top movement four times for a total of 28" and no room for the base.
The bearing is currently out of plumb 4" to the west.
The northwest Rocker has been moved once on the base, to the west 5 3/4" and never moved on the top attachment to the lower chord.
There is room for additional top movement five times for a total of 35" and room for one move on the base for 5 3/4".
At Pier 6, SW rocker, The bearing is currently out of plumb 5" to the west.
The top movement in the South West top was done March 8th 2004, one of the bottom movements appear to have been done in 1999, it is not known when the other bottom movement was done.
The bolt pattern on the Lower chord is 7" and the pattern on the bearing is 21".
RN & MG 03/24/2009
SW rocker tilt/angle is the sam

313	FIXED BEARING	2	06-06-2013	18 EA	10	8	0	N/A	N/A
			05-14-2012	18 EA	10	8	0	N/A	N/A

Notes: |Abutment Bearings have been blasted and painted. 2009 FC inspection: Fixed bearings at west abutment are tipped toward tiver, with unsound concrete below them.
Bottom of bearings are corroding & rusting GK 5/18/10
Continuing to corrode. RH 5/2012.
2013: The fixed bearings at the West Abutment have uplift issues as the concrete around the bearings has now spalled off.
|

202	PAINT STL COLUMN	2	06-06-2013	72 EA	36	18	18	0	0
			05-14-2012	72 EA	36	18	18	0	0

Notes: |2 cotter keys missing bent 4 4 @ bent 5 &2 missing at bent 11GK 5/18/10.
There appears to be a dip at the joint above the second bent from the west. is this bent settled? Needs an evaluation.
2013: No significant change. All bents are tilted from 2-5 degrees.|

Mn/DOT BRIDGE INSPECTION REPORT

Inspected by: DISTRICT 2

BRIDGE 9090 US 2 OVER RED RIVER INSP. DATE: 06-06-2013

STRUCTURE UNIT: 0

ELEM NBR	ELEMENT NAME	ENV	INSP. DATE	QUANTITY	QTY CS 1	QTY CS 2	QTY CS 3	QTY CS 4	QTY CS 5
210	CONCRETE PIER WALL	2	06-06-2013	210 LF	140	0	70	0	N/A
			05-14-2012	210 LF	140	0	70	0	N/A

Notes: |The ND Pier 6 is moving towards the river and is twisting causing cracks in Pier wall, there are cracks in the east Pier but not as severe as Pier 6. There is 6 feet of debris and soft silt at the bottom of the center pier - 2004 underwater inspection.
2009 FC inspection: Evidence of movement and twisting in west main pier (pier 6) Joe F 6/25/2009
A baseline was established using 2 eyebolts,one on no. side one on so. side of west end of pier 6 cap, a stringline streched between the 2 eyebolts show a bow of 5.5 inches in the pier wall.GK 5/18/10
Cracks continue in 2012
Bow in wall 5 5/8 inches in 2012 GK
2013: No significant change. Cracks in wall are more pronounced at Pier 6. See notes for element 234.|

215	CONCRETE ABUTMENT	2	06-06-2013	140 LF	105	35	0	0	N/A
			05-14-2012	140 LF	105	35	0	0	N/A

Notes: |Minor Hairline cracks @ W. abut. 1 sq. ft. of spall & deteriorated concrete @ S. end of W. Br/wall. Patch is coming out of conc. Bm. Water leaking through poured joint over parapets some cracking w/leaching of E. parapet. Horz. crack in S. half of W b/wall, 6 inches from the top. Small spall in top of E. br./wall w/rebar expsed.GK 5/18/10
Abut. 14, north 1/2 added an additional 8 inches to face of backwall, some wood forms still inplace. GK 5/18/10
Loose cork from cantilevered sect. working its way out. RH 5/2012
2013: There are spalls behind the fixed bearings on the West Abutment due to likely uplift from the structure. This is reflected in the current rating.|

220	CONCRETE FOOTING	2	06-06-2013	18 EA	18	0	0	0	N/A
			05-14-2012	18 EA	18	0	0	0	N/A

Notes: |This element should be used to describe the condition of the footing caps supporting the steel column bents. This is an each item - there are 9 bents, with a separate footing for each side (eastbound & westbound), so the total quantity should be 18 (each footing support 4 steel columns). Each footing cap is 30 ft. long, and is supported by two lower footings (each lower footing is supported by 2 steel H-piling). The lower footings should be below grade (not visible for inspection) - only the upper portions of the footing caps should be visible for inspection.FC 6/11
2013: There is minor cracking on the footings.|

234	CONCRETE CAP	2	06-06-2013	210 LF	140	0	70	0	N/A
			05-14-2012	210 LF	140	0	70	0	N/A

Notes: |Cracks in the west pier are at 1/16 inch wide.
As the bowing and cracking in Pier #6 extends through the “cap”, the ratings for this element should be the same as for element #210 (pier wall).FC 6/11
2013: No significant change. The cracks on Pier 6 range from hairline to 1/4" and extend through the pier wall and cap. The string line attached to the pier wall measures 1-3/8" on the north end and 6" at the center, indicating a 4-5/8" bow.|

387	CONCRETE WINGWALL	2	06-06-2013	4 EA	3	1	0	0	N/A
			05-14-2012	4 EA	3	1	0	0	N/A

Notes: |2009 FC inspection: 3 ft x 4 ft washout and separation from slope protection at NE wingwall. Joe F 6/25/2009
2013: No significant change.|

357	PACK RUST	2	06-06-2013	1 EA	0	1	0	0	N/A
			05-14-2012	1 EA	0	1	0	0	N/A

Notes: |Pack rust at chord splices and horizontal gussets connecting diagonal bracing on lower chord.
2013: No significant change.|

358	CONC DECK CRACKING	2	06-06-2013	1 EA	0	0	1	0	N/A
			05-14-2012	1 EA	1	0	0	0	N/A

Notes: |Deck is cracked with leaching, and has been epoxied in 08. DSH
2013: There is extensive unsealed cracking throughout the deck surface.|

359	CONC DECK UNDERSIDE	2	06-06-2013	1 EA	0	0	0	1	0
			05-14-2012	1 EA	0	0	1	0	0

Notes: |Spalling aat numerous places in the approach spans @ CenterLine @ 2nd Floor Beam W. of E. pier. Concrete spalling out over Floor Beams @ the 3rd and 4th from W. pier with rebar exposed. Large spalls in deck soffet, north side full length..
2009 FC inspection: spalling on deck overhang areas are less than 10% of total deck area. Joe F 6/25/2009
General appearance under deck is in very good condition other than north soffit.GK 5/18/10
As the spalling on the underside of the deck is generally confined to the fascia overhangs, it constitutes less than 10% of the total deck area, A rating of condition 3 would be appropriate FC 6/11
Bottom of deck in generally fair condition, poor condition on catilevered sections. RH 5/2012
2013: Underside of deck has numerous areas of saturation, especially in the east truss span. This warranted an NBI of 5.|

Mn/DOT BRIDGE INSPECTION REPORT

Inspected by: DISTRICT 2

BRIDGE 9090 US 2 OVER RED RIVER INSP. DATE: 06-06-2013

STRUCTURE UNIT: 0

ELEM NBR	ELEMENT NAME	ENV	INSP. DATE	QUANTITY	QTY CS 1	QTY CS 2	QTY CS 3	QTY CS 4	QTY CS 5
360	SETTLEMENT	2	06-06-2013	1 EA	0	0	1	N/A	N/A
			05-14-2012	1 EA	0	0	1	N/A	N/A

Notes: |Appears south end of west main pier " P6 " has moved toward the river. Movement and twisting and continues to get worse.
There appears to be a dip at the joint above the second bent from the west.
While no change in the eastward movement of Pier #6 was observed during the 2011 inspection, the cumulative long-term movement of Pier #6 (25” to the east at the south end), probably warrants a rating of condition 3 for this smart flag.
2013: No significant change.|

361	SCOUR	2	06-06-2013	1 EA	0	1	0	N/A	N/A
			05-14-2012	1 EA	0	1	0	N/A	N/A

Notes: |The undermining of the footing at Bent #5 has increased since 2009 FC 6/11
Same in 2012
2013: No significant change.|

362	TRAFFIC IMPACT	1	06-06-2013	1 EA	0	1	0	N/A	N/A
			05-14-2012	1 EA	0	1	0	N/A	N/A

Notes: |Bent Flange from impact on south fascia and 1st interior beams, east approach over road.
2013: No significant change.|

363	SECTION LOSS	2	06-06-2013	1 EA	0	1	0	0	N/A
			05-14-2012	1 EA	0	1	0	0	N/A

Notes: |. ***The through trusses were blasted & painted in 1996. The % rated down is to denote existing sect loss. This problem will be evaluated at the next snooper inspection.***
2013: Areas of isolated section loss on the floorbeams and lower chords, but no significant loss of cross section.|

964	CRITICAL FINDING	2	06-06-2013	1 EA	1	0	N/A	N/A	N/A
			05-14-2012	1 EA	1	0	N/A	N/A	N/A

Notes: |DO NOT DELETE THIS CRITICAL FINDING SMART FLAG.
2013: No change.|

966	FRACTURE CRITICAL	2	06-06-2013	1 EA	1	0	0	N/A	N/A
			05-14-2012	1 EA	1	0	0	N/A	N/A

Notes: |Do Not Remove. See in-depth report for location of F/C members.
2013: No change.|

981	SIGNING	2	06-06-2013	1 EA	0	0	1	0	0
			05-14-2012	1 EA	1	0	0	0	0

Notes: | < none >
2013: NE delineator is bent over to the west.|

984	DRAINAGE	2	06-06-2013	1 EA	0	1	0	N/A	N/A
			05-14-2012	1 EA	0	1	0	N/A	N/A

Notes: |Downspouts missing on NE corner of the main span. Slope washouts @ E. River bank.
Downspouts were extended from the deck drains by slipping squar tubing over the exsisting and fstening with 2 screws.
Rust and corrosion is present at this connection and where fastened to the lower chord with a welded strap. The straps are rusting baddly and a few are broken, completely thru, should be repaired. GK 5/2012
2013: No significant change.|

985	SLOPES	2	06-06-2013	1 EA	0	1	0	N/A	N/A
			05-14-2012	1 EA	0	1	0	N/A	N/A

Notes: |Major transverse cracking in slope paving @ West end w/some heaving. Erosion at the 4th bent from the west. The Dike on the MN side has been removed. There are Gophers or something tunnelling in and around the abutment on the ND side. Abut. 14, washout undermining NE br. seat. GK 5/18/10
ND built a rock flume type ditch alongside Bent 5 / pier 6 south side . GK 5/2012
2013: No significant change.|

986	CURB & SIDEWALK	2	06-06-2013	1 EA	0	1	0	N/A	N/A
			05-14-2012	1 EA	0	1	0	N/A	N/A

Notes: |cracks are present, with a 4 ft. area spalled out w/ rebar @ the west end of C&G.GK 5/18/10
2013: No significant change.|

Mn/DOT BRIDGE INSPECTION REPORT

Inspected by: DISTRICT 2

BRIDGE 9090 US 2 OVER RED RIVER INSP. DATE: 06-06-2013

STRUCTURE UNIT: 0

ELEM NBR	ELEMENT NAME	ENV	INSP. DATE	QUANTITY	QTY CS 1	QTY CS 2	QTY CS 3	QTY CS 4	QTY CS 5
988	MISCELLANEOUS	2	06-06-2013	1 EA	0	1	0	N/A	N/A
			05-14-2012	1 EA	0	1	0	N/A	N/A

Notes: |Conduit seperated from light pole, E. approach on the North Rail
2009 FC inspection: Crack to to lack of fusion in a plug weld in outer gusset plate L-12, east truss, south side was discovered. Per consultation with Todd Nieman, crack was ground out. Crack penetrated full thickness of gusset plate, but did not extend into lower chord. Crack was caulked and painted after grinding.
Out of plumb measurements for the Bents are listed below: Measurement show the distance between a plumb line centered on the pin and the center of the lower bearing plate, in inches.

Bent	North	South
13	4.0	2.250
12	2.375	4.250
11	1.125	2.625
10	2.125	2.50
9	1.750	2.50
5	4.750	3.750 - 4.2 in 2012
4	1.250	1.250
3	3.750	2.125
2	3.375	3.750

In sept 2010, meas. were taken from Bent 5 to Pier 6.Bent 5 has an eyebolt protruding from the south concrete base near centerline, approx 5 ft. above ground and meas. were taken from the center of this eyebolt to the center of Pier 6,"Paintmark with an X" and to two eybolts on Pier 6 both approx 1 ft. above ground and approx. 4 ft. from the outside edge of the pier wall, both painted .
Meas. were taken with a steel chain.
So. meas. 72.15 ft.
Center 63.35 ft
North 68.95 ft.
Triang. meas. continue to remain close to orig. meas. in 2012 GK
Bents on west side /ND are tipping east,worst being bent 4 at 4.25 inches out of plumb and Mn side are tipping west worst being bent 12, 3 1/2 inches out of plumb.
Bents out of plumb meas. are on file GK 5/2012
2013: No significant change.|

967	GUSSET DISTORTION	1	06-06-2013	1 EA	0	1	0	0	N/A
			05-14-2012	1 EA	0	1	0	0	N/A

Notes: |2009 FC inspection: new element. , Top plates have minor distortion due to construction fit-up. Bottom plates have distortion due to pack rust. Joe F6/25/2009
2013: No significant change.|

General Notes: FC June 2011 entered as a routine inspect. until FC portion in the new program SIMS is functioning as intended GK 6/11 11/08 Changed Channel NBI code from 7 to 6 per Rog H NORTH SOUTH BENT 13 2-1/2" 0" in 2010, 2" BENT 12 2" 1-1/2" BENT 11 0" 1-1/2" Tipping west BENT 10 3/4 2" BENT 9 1" 1-1/2" PIER 8 1-3/4 1-3/4" PIER 7 1-1/2" 2-1/4" PIER 6 2" 6-1/2" Tipping east BENT 5 4" 3-1/4" BENT 4 0" 0" BENT 3 2-3/4" 0" BENT 2 1 1/2" 3" In 2010 meas. were within 1 inch except bent 13 south GK 5/18/10 Snooper bridge with many Pigion nests within portals. Bridge layout= west end/ abut. 1,bent 2-5,pier 6, pier 7, pier 8, bent 9-13, abut 14 @ east end.GK 5/18/10
Snooper 5/14/2012

Inspector's Signature

Reviewer's Signature / Date

Appendix C

Bridge Inventory Sheets

Mn/DOT Structure Inventory Report

Bridge ID: 9090 **US 2 over RED RIVER**

Date: 06/26/2013

+ GENERAL +

Agency Br. No.	
District	2
Maint. Area	2B
County	60 - POLK
City	EAST GRAND FORKS
Township	
Desc. Loc.	AT N DAKOTA STATE LINE
Sect., Twp., Range	02 - 151NN - 50W
Latitude	47d 55m 59.78s
Longitude	97d 02m 13.84s
Custodian	STATE HWY
Owner	STATE HWY
Inspection By	DISTRICT 2
BMU Agreement	
Year Built	1963
Year Fed Rehab	
Year Remodeled	
Temp	
Plan Avail.	CENTRAL

+ STRUCTURE +

Service On	HWY;PED
Service Under	STREAM
Main Span Type	STEEL HIGH TRUSS
Main Span Detail	PARKER
Appr. Span Type	STEEL BM SPAN
Appr. Span Detail	
Skew	
Culvert Type	
Barrel Length	

Number of Spans

MAIN: 2 APPR: 11 TOTAL: 13

Main Span Length	279.0 ft
Structure Length	1,261.0 ft
Deck Width	65.0 ft
Deck Material	C-I-P CONCRETE
Wear Surf Type	LOW SLUMP CONC
Wear Surf Install Year	1984
Wear Course/Fill Depth	0.17 ft
Deck Membrane	NONE
Deck Protect.	N/A
Deck Install Year	
Structure Area	81,965 sq ft
Roadway Area	70,611 sq ft
Sidewalk Width - L/R	2.5 ft 2.5 ft
Curb Height - L/R	0.75 ft 0.75 ft
Rail Codes - L/R	19 19

+ ROADWAY +

Bridge Match ID (TIS)	1
Roadway O/U Key	1-ON
Route Sys/Nbr	USTH 2

Roadway Name or Description

US 2

Roadway Function	MAINLINE
Roadway Type	2 WAY TRAF
Control Section (TH Only)	18
Ref. Point (TH Only)	000+00.000
Date Opened to Traffic	01-01-1963
Detour Length	4 mi.
Lanes	4 Lanes ON Bridge
ADT (YEAR)	20,740 (2008)
HCADT	1,867
Functional Class.	URB/OTH PR ART

+ RDWY DIMENSIONS +

If Divided	**NB-EB**	**SB-WB**
Roadway Width	28.0 ft	28.0 ft
Vertical Clearance	19.8 ft	19.8 ft
Max. Vert. Clear.	19.8 ft	19.8 ft
Horizontal Clear.	27.9 ft	27.9 ft
Lateral Clr. - Lt/Rt		
Appr. Surface Width	60.0 ft	
Roadway Width	56.0 ft	
Median Width	4.0 ft	

+ MISC. BRIDGE DATA +

Structure Flared	NO
Parallel Structure	NONE
Field Conn. ID	BOLTED
Cantilever ID	PIN & HANGER

Foundations

Abut.	CONC - FTG PILE
Pier	STEEL - FTG PILE
Historic Status	NOT ELIGIBLE
On - Off System	ON

+ PAINT +

Year Painted	1996	**Pct. Unsound**	5 %
Painted Area	183,102 sf		
Primer Type	OTHER		
Finish Type	URETHANE		

+ BRIDGE SIGNS +

Posted Load	NOT REQUIRED
Traffic	NOT REQUIRED
Horizontal	OBJECT MARKERS
Vertical	NOT REQUIRED

+ INSPECTION +

Deficient Status	S.D.
Sufficiency Rating	48.2
Last Inspection Date	06-06-2013
Inspection Frequency	12
Inspector Name	DISTRICT2
Structure	A-OPEN

+ NBI CONDITION RATINGS +

Deck	10 % UNSOUND	5
Superstructure		6
Substructure		4
Channel		6
Culvert		N

+ NBI APPRAISAL RATINGS +

Structure Evaluation	4
Deck Geometry	5
Underclearances	N
Waterway Adequacy	6
Approach Alignment	7

+ SAFETY FEATURES +

Bridge Railing	0-SUBSTANDARD
GR Transition	N-NOT REQUIRED
Appr. Guardrail	N-NOT REQUIRED
GR Termini	N-NOT REQUIRED

+ IN DEPTH INSP. +

Frac. Critical	Y	24 mo	06/2013
Underwater	Y	60 mo	08/2012
Pinned Asbly.	Y	48 mo	06/2011
Spec. Feat.			

+ WATERWAY +

Drainage Area	
Waterway Opening	29000 sq ft
Navigation Control	NO PRMT REQD
Pier Protection	NOT APPL
Nav. Vert./Horz. Clr.	
Nav. Vert. Lift Bridge Clear.	
MN Scour Code	L-STBL;LOW RISK
Scour Evaluation Year	1997

+ CAPACITY RATINGS +

Design Load	HS20
Operating Rating	HS 26.80
Inventory Rating	HS 16.00
Posting	
Rating Date	07-22-2008

Mn/DOT Permit Codes

A: 1 B: 1 C: 2

V2006