1. STRUCTURAL TUBE RAILING (DESIGN T-1) AND CONCRETE PARAPET (TYPE P-2, TL-4) MOD. 3'-0" MIN. HEIGHT ABOVE SLAB. SEE AESTHETICS.
2. ORNAMENTAL METAL RAILING TYPE SPECIAL (CURB MOUNT)
3. 9" MIN. SLAB
4. STA. 113+94.656 OFF 15'-7" RT.
5. NUMBER AND SPACING OF BEAMS IS APPROXIMATE AND WILL BE SET DURING FINAL DESIGN
6. ℄ T.H. 63 (TH63) P.O.T. STA. 113+78.737 = ℄ T.H. 61 S.B. (TH61SB) P.O.C. STA. 60+85.049 X=656799.347, Y=236735.427 ∢ =125°05'12.8"
7. ℄ T.H. 63 (TH63) P.O.T. STA. 114+19.496 = ℄ T.H. 61 N.B. (TH61NB) P.O.C. STA. 61+12.712 X=656772.909, Y=236766.448 ∢ =121°55'09.4"
8. 23'-7½" HORIZ. CLR. MIN. REQ'D. TO ACCOMMODATE 200' MIN. S.S.D. ON T.H. 61 S.B. FOR POTENTIAL FUTURE T.H. 63 WIDENING.
9. 16'-0" MIN. HORIZ. CLR.
10. B624 C & G (TYP.)
11. STA. 113+51.837 OFF 15'-7" RT.
12. RETAINING WALL LOCATIONS ARE GIVEN AT 1'-6" OUTSIDE GUTTERLINE. ACTUAL WALL ALIGNMENT LOCATION TO BE DETERMINED IN FINAL DESIGN.

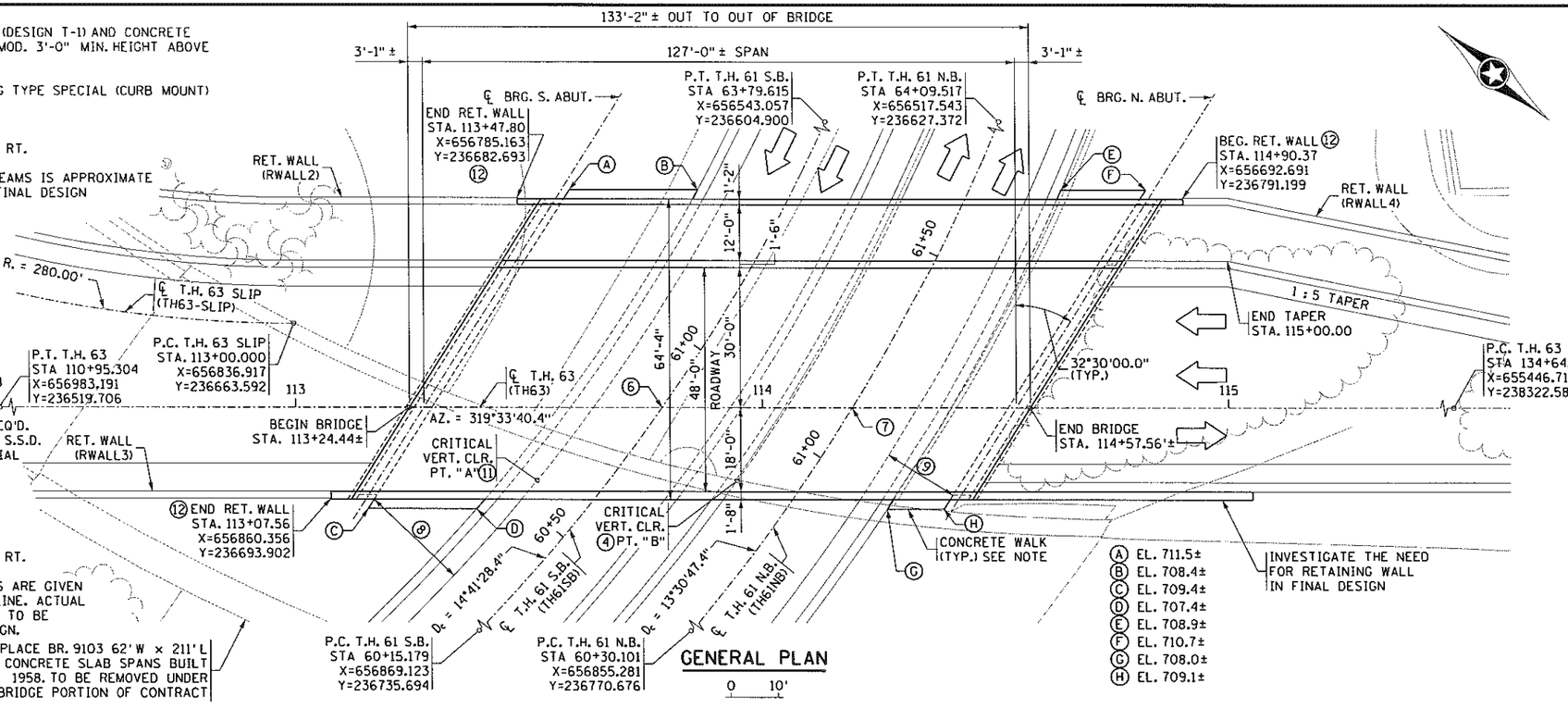

GENERAL PLAN
0 10'

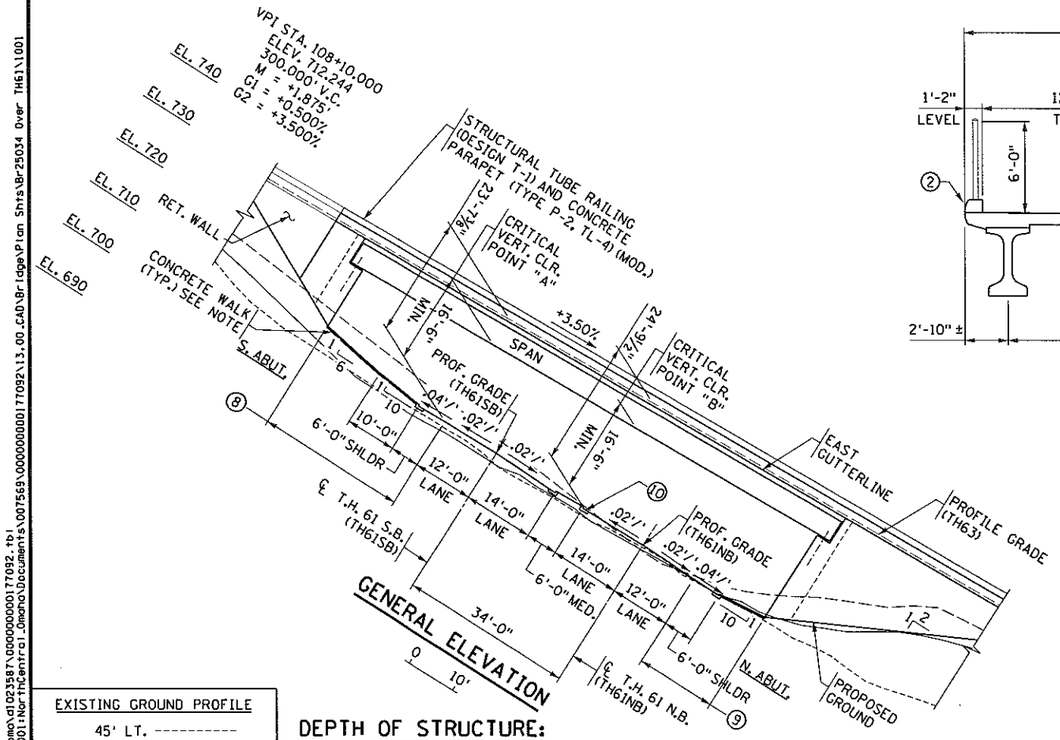

GENERAL ELEVATION

EXISTING GROUND PROFILE
45' LT. ----------
℄ T.H. 63 ——————
20' RT. – – – – –

DEPTH OF STRUCTURE:

5'-6" GUTTER TO LOW BRIDGE
MN54 P.C.B. 9± BEAM LINES

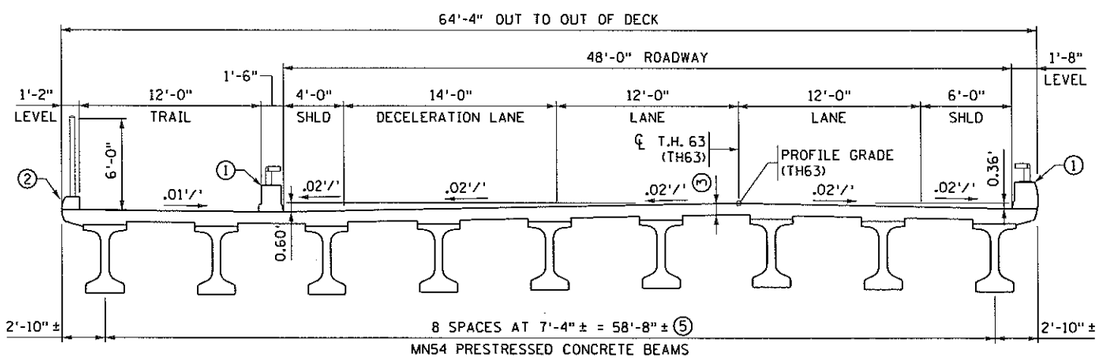

TRANSVERSE SECTION
0 10'

NOTES:

RETAINING WALL AND WINGWALL CONNECTION DETAILS TO BE COORDINATED BETWEEN FINAL BRIDGE DESIGN AND ROAD DESIGN UNITS.

SEE BORING SURVEY SHEETS FOR INPLACE UTILITIES.

SUBSTRUCTURES SET PARALLEL AT AZ. 82°03'40.4"

BRIDGE APPROACH PANEL LAYOUT STANDARDS 5-297.222 AND 5-297.223 SHALL APPLY.

BRIDGE APPROACH TREATMENT STANDARD 5-297.233 APPLIES.

CONCRETE WALK REQUIRED AT EACH ABUTMENT UNDER BRIDGE AND EXTENDING 2'-0" MINIMUM BEYOND EACH EDGE OF DECK.

TRAFFIC TO BE DETOURED USING TEMPORARY BYPASS NORTHEAST OF PROPOSED STRUCTURE. SEE SHEET 5.

VISUAL QUALITY MANUAL DEVELOPED FOR PROJECT.

METAL RAILING TO MEET REQUIREMENTS FOR PROTECTIVE SCREENING PER LRFD BRIDGE DESIGN MANUAL 13.2.5.

HIGH ABUTMENT REQUIRED FOR STOPPING SIGHT DISTANCE ON T.H. 61 S.B.

CLIP TOP FLANGE OF BEAM AS REQUIRED TO PROVIDE ADEQUATE CLEARANCE TO JOINT.

DESIGN DATA

2014 AND CURRENT INTERIM AASHTO LRFD BRIDGE DESIGN SPECIFICATIONS

LOAD AND RESISTANCE FACTOR DESIGN METHOD
DESIGN LOADING HL-93 LIVE LOAD

DEAD LOAD INCLUDES 20 psf ALLOWANCE FOR FUTURE WEARING COURSE MODIFICATIONS.

MATERIAL DESIGN PROPERTIES:
REINFORCED CONCRETE:
f'c = 4 ksi n = 8
fy = 60 ksi REINFORCEMENT
fy = 75 ksi REINFORCEMENT (STAINLESS)

PRESTRESSED CONCRETE:
f'c = 9 ksi n = 1
fpu = 270 ksi LOW RELAXATION STRANDS
0.75 fpu FOR INITIAL PRESTRESS

2042 PROJECTED TRAFFIC VOLUMES:

ROAD OVER		ROAD UNDER
15,600	A.A.D.T.	22,100
1,400	H.C.A.D.T.	1,550

DESIGN SPEED: 30 MPH (OVER), 30 MPH (UNDER)
APPROXIMATE DECK AREA 8570 SF

LIST OF SHEETS

NO.	TITLE
1	GENERAL PLAN AND ELEVATION
2	BRIDGE SURVEY
3	TYPICAL SECTIONS
4	ALIGNMENT TABULATIONS
5	STAGING CONCEPT
6	BORINGS
7-9	AESTHETIC DETAILS

PROPOSED TYPE OF STRUCTURE

DECK:
TYPE MN54 PRESTRESSED CONCRETE BEAMS
SIMPLE SPAN
ALL BARS STAINLESS STEEL
FULL DEPTH HIGH PERFORMANCE CONCRETE

SUBSTRUCTURE:
PARAPET TYPE ABUTMENTS SUPPORTED ON SPREAD FOOTINGS

AESTHETICS:
LEVEL B

ROAD DESIGN UNIT:
CHAD HANSON 507-286-7637

BRIDGE DESIGN UNIT:
BEN JILK 651-366-4585

HDR

MINNESOTA DEPARTMENT OF TRANSPORTATION

PRELIMINARY BRIDGE PLANS
BRIDGE NO. 25034

T.H. 63 OVER T.H. 61
0.2 MILES NORTH OF JCT
T.H. 63 AND T.H. 58

SPAN IDENTIFICATION NO. 501

SEC. 29 TWP. 113 N. R. 14 W.

CITY OF RED WING GOODHUE COUNTY, MN

APPROVED: Beverly A. Evanko 11/23/15
STATE BRIDGE ENGINEER DATE

DES: DJR	DR: DJR	25034
CHK: JZB	CHK: JZB	

drawing 11/4/2015 2:12 PM
c:\powerpkg\pw\dt023587\d0000000017092.rbi
pw:\\PWAPPOMA001:Workfile\Central Omaha\Documents\007569\0000000017092\13.00.CAD\Bridge\Plan Shts\BR25034 Over TH61\1001

CONTRACTED PROFILE

SCALE : 0 50' 100' HORIZONTAL, 0 5' 10' VERTICAL

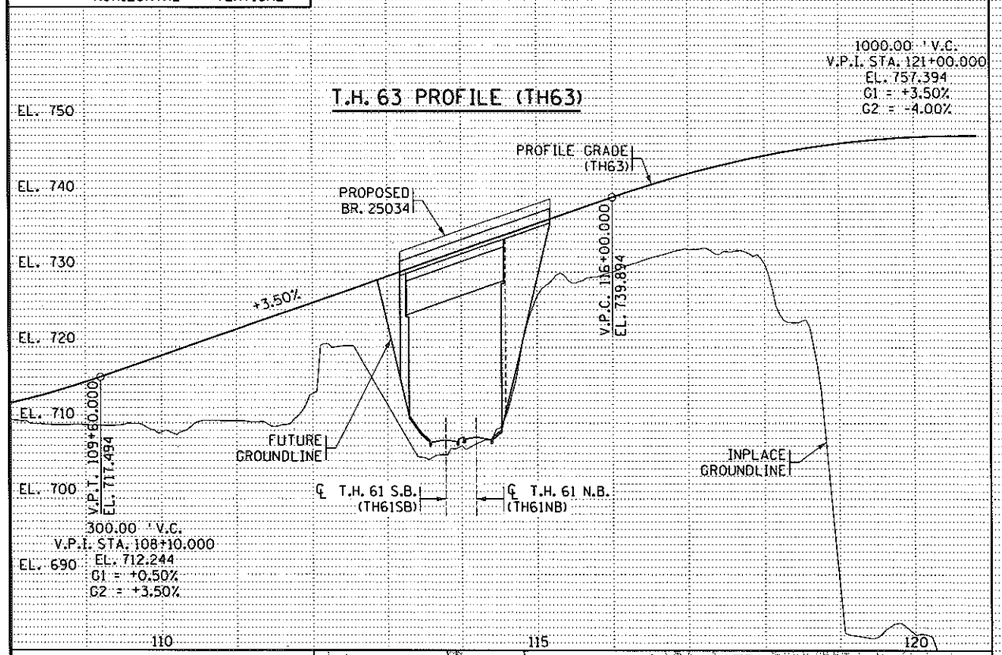

PLAT

SCALE: 0 50' 100'

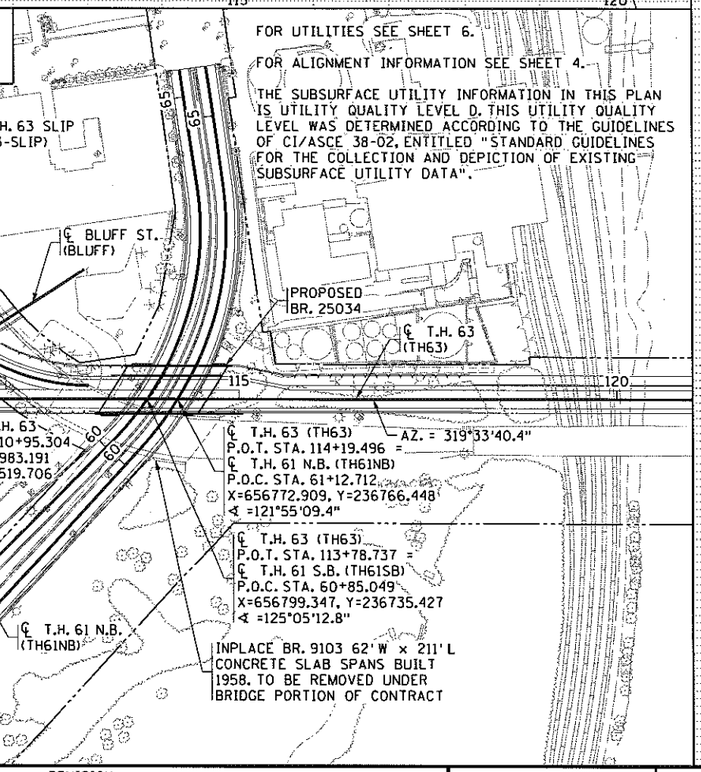

ADDITIONAL PROFILES

SCALE : 0 50' 100' HORIZONTAL, 0 5' 10' VERTICAL

T.H. 61 N.B. PROFILE (TH61NB)

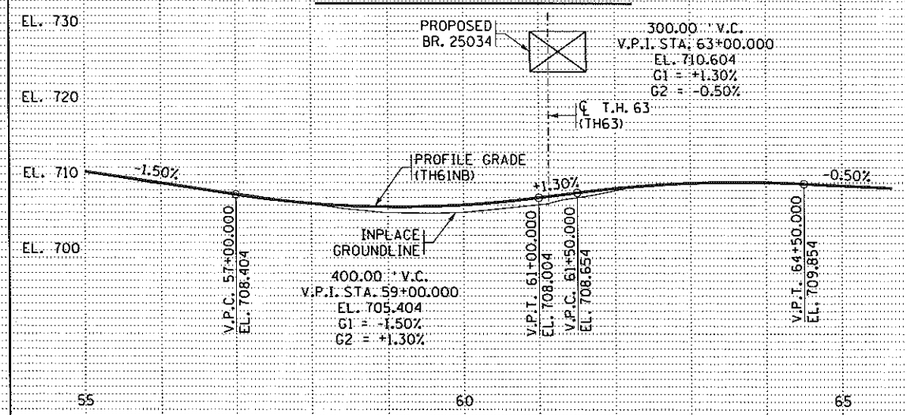

T.H. 61 S.B. PROFILE (TH61SB)

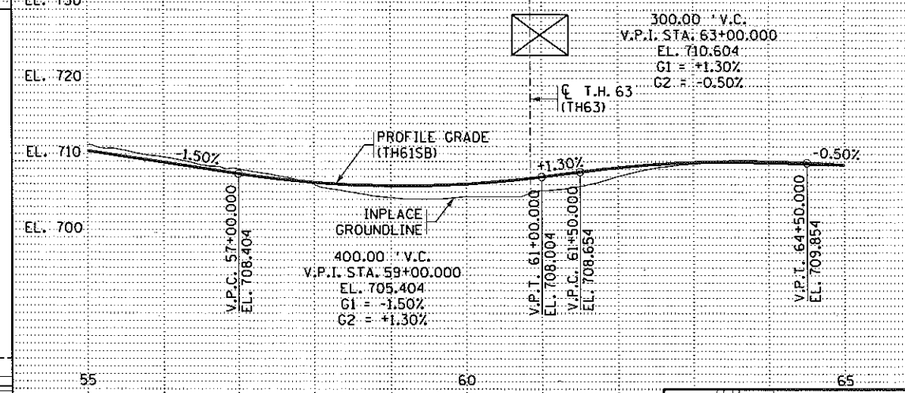

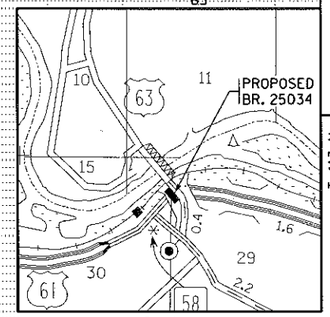

INDEX MAP
(FOUR SECTIONS)

LOCATION ENGINEER'S OBSERVATIONS AT BRIDGE SITE

1. SPECIAL FEATURES: WATERFALLS, DAMS, FLOODS, ICE, DEBRIS, SLIDING BANKS, RECREATIONAL BOATING.
2. OTHER BRIDGES OR CULVERTS OVER THE SAME STREAM (PARTICULARLY STRUCTURES WHICH CARRY HIGH WATER WITHOUT OVERFLOW OF ROADWAY) : GIVEN LOCATION, TYPE, LENGTH, HEIGHT ABOVE HIGH WATER, CROSS-SECTIONAL AREA ETC.
3. APPARENT HIGHWATER ELEVATION OBTAINED FROM:
4. OTHER DATA: APPROX. VELOCITY OF WATER AT TIME OF SURVEY.

HYDRAULIC ENGINEERS RECOMMENDATION

DATE: XX-XX-XX

STREAM OR DITCH DESIGNATION: XXX
DRAINAGE AREA: XXX SQ. MI.
MAX. FLOOD ON RECORD: XXX C.F.S. (XX-XX-XX)
MAXIMUM OBSERVED HIGHWATER ELEVATION: XXX.X FT.
DESIGN FLOOD (XX YR. FREQ.): XXX C.F.S.
HEADWATER ELEVATION: XXX.X FT.
DESIGN MEAN VELOCITY THROUGH STRUCTURE: X.X F.P.S.
TOTAL STAGE INCREASE: XX.X FT.
LOW MEMBER AT OR ABOVE ELEVATION: XXX.X FT.
WATERWAY AREA REQUIRED BELOW ELEV. XXX.X = XXX SQ. FT. AT RIGHT ANGLES TO CHANNEL
BASIC FLOOD (100 YR. FREQ.): XXXX C.F.S.
HEADWATER ELEVATION: XXX.X FT.
TOTAL STAGE INCREASE: X.X FT.
MEAN VELOCITY THROUGH STRUCTURE: X.X F.P.S.
FLOWLINE ELEVATION: XXX.X FT. SKEW ANGLE: XX°
ESTIMATED PRELIMINARY TOTAL SCOUR AT PIER EL. XXX.X (500 OR OT YR. FREQ.)

SCOUR CONFIRMATION RECOMMENDATION

DATE: XX-XX-XX

TOTAL SCOUR AT PIER EL. XXX.XX (500 OR OT YR. FREQ.)
SCOUR CODE: OBTAIN FROM HYDRAULIC ENGINEER

BRIDGE SURVEY SHEETS MADE FROM :

FILES:
JOB112.GPK, 119112_TP1.DGN, 119112_RW1.DGN, 119112_PR1.DGN, 119112_GM1.DGN, 119112_AL1.DGN, 119112.TIN

BENCH MARK ELEVATION 678.588 (N.A.V.D 88 ADJ.) GSID STATION #93692, MNDOT NAME: "RW 4 2010", IN RED WING.
X = 653,443.923, Y = 235,968.901

MINNESOTA DEPARTMENT OF TRANSPORTATION

BRIDGE SURVEY

T.H. 63 OVER T.H. 61

0.2 MILES N. OF JCT T.H. 63 AND T.H. 58

SEC. 29 TWP. 113 N. R. 14 W.

CITY OF RED WING GOODHUE COUNTY, MN

REVISION					
NO.	DATE	DESCRIPTION	DR.	CHK.	APP'D.

HDR

TITLE: BRIDGE SURVEY

DES: DJR	DR: DJR	APPROVED:	
CHK: JZB	CHK: JZB		

STATE PROJECT NO. 2515-21

SHEET NO. 2 OF 9 SHEETS

BRIDGE NO. 25034

drochel
11/17/2015 8 PM
c:\pwworking\mndot\d1023587\D0000000001770921.dgn
pw:\\PWAPPDMN01.hdr.ftcentral.loncnd\Documents\007559\D0000000001770921.tbl

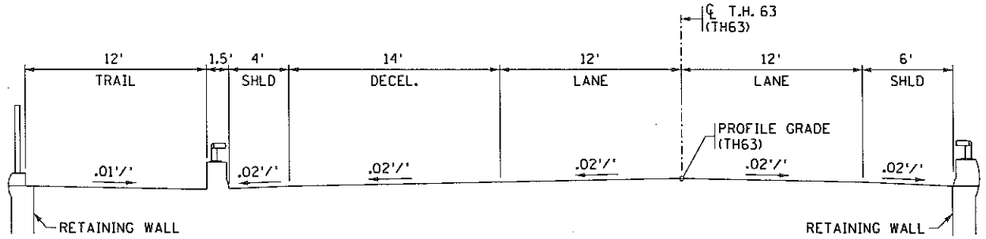

PROPOSED TYPICAL SECTION T.H. 63

STA. 113+00 TO STA. 115+00

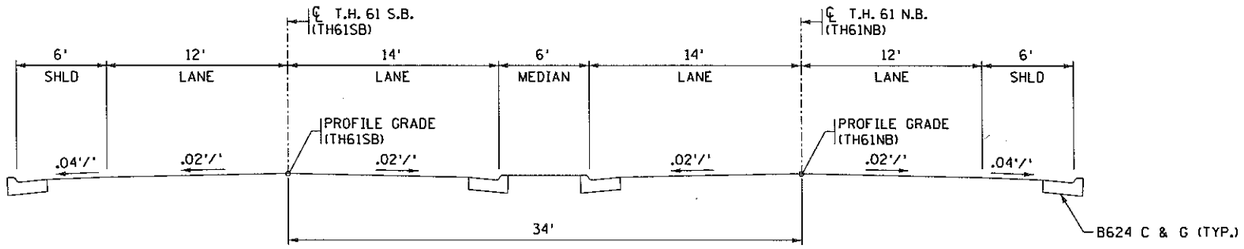

PROPOSED TYPICAL SECTION T.H. 61

REVISION					
NO.	DATE	DESCRIPTION	DR.	CHK.	APP'D.

HDR

TITLE: TYPICAL SECTIONS

DES: DJR	DR: DJR	APPROVED:
CHK: JZB	CHK: JZB	

STATE PROJECT NO. 2515-25034

SHEET NO. 3 OF 9 SHEETS

BRIDGE NO. 25034

drachel
1:57:50 PM
11/4/2015
c:\pwworking\oma\d1023587\000000001770 92.tbl
pw:\\PWAPPOMA001:NorthCentral_Omaha\Documents\007569\000000000177092\13.00_CAD\Bridge\Plan Shts\Br25034 Over TH61\5002

DENOTES ALIGNMENT USED IN PLAN
DENOTES ALIGNMENT GEOPAK NAME

ALIGNMENT TABULATION - (TH63) T.H. 63

POINT NUMBER	POINT	STATION	CURVE DATA					COORDINATES		AZIMUTH
			DELTA	DEGREE	RADIUS	TANGENT	LENGTH			
			SPIRAL CURVE DATA					X	Y	
			ANGLE (Os)	DEGREE	ST	LT	LS			
1010	PI	109+64.185	87° 48' 24.1" RT	24° 54' 40.4"	230.000'	221.360'	352.479'	657,126.773	236,351.229	PI
	CC							657,158.244	236,668.892	
	PT	110+95.304						656,983.191	236,519.706	319° 33' 40.4"
	PC	134+64.083						655,446.718	238,322.583	319° 33' 40.4"
1015	PI	135+71.993	4° 18' 50.5" RT	1° 59' 59.5"	2,865.000'	107.910'	215.717'	655,376.724	238,404.713	PI

ALIGNMENT TABULATION - (TH61NB) T.H. 61 N.B.

POINT NUMBER	POINT	STATION	CURVE DATA					COORDINATES		AZIMUTH
			DELTA	DEGREE	RADIUS	TANGENT	LENGTH			
			SPIRAL CURVE DATA					X	Y	
			ANGLE (Os)	DEGREE	ST	LT	LS			
1100	POT	42+00.000						658,683.434	236,686.257	
	PC	60+30.101						656,855.281	236,770.676	272° 38' 37.9"
1105	PI	62+33.571	51° 16' 15.8" LT	13° 30' 47.4"	424.000'	203.470'	379.416'	656,652.028	236,780.061	PI

ALIGNMENT TABULATION - (TH61SB) T.H. 61 S.B.

POINT NUMBER	POINT	STATION	CURVE DATA					COORDINATES		AZIMUTH
			DELTA	DEGREE	RADIUS	TANGENT	LENGTH			
			SPIRAL CURVE DATA					X	Y	
			ANGLE (Os)	DEGREE	ST	LT	LS			
1165	PI	57+19.841	2° 16' 08.3" RT	0° 45' 00.2"	7,639.000'	151.276'	302.512'	657,163.416	236,710.398	PI
	CC							657,666.901	244,334.288	
	PT	58+71.077						657,012.695	236,723.353	274° 54' 46.2"
	PC	60+15.179						656,869.123	236,735.694	274° 54' 46.2"
1170	PI	62+11.926	53° 32' 24.1" LT	14° 41' 28.4"	390.000'	196.747'	364.435'	656,673.098	236,752.544	PI

ALIGNMENT TABULATION - (BYPASS) BYPASS

POINT NUMBER	POINT	STATION	CURVE DATA					COORDINATES		AZIMUTH
			DELTA	DEGREE	RADIUS	TANGENT	LENGTH			
			SPIRAL CURVE DATA					X	Y	
			ANGLE (Os)	DEGREE	ST	LT	LS			
	PC	40+00.000						657,163.536	236,438.953	268° 40' 53.38"
BYPASS-1	PI	40+05.799	2° 53' 18.34" RT	24° 54' 40.35"	230.000'	5.799'	11.595'	657,157.739	236,438.820	PI
	CC							657,158.244	236,668.892	
	PCC	40+11.595						657,151.943	236,438.979	271° 34' 11.72"
	PCC	40+11.595						657,151.943	236,438.979	271° 34' 11.72"
BYPASS-2	PI	41+49.361	67° 48' 16.85" RT	27° 56' 56.98"	205.000'	137.766'	242.600'	657,014.228	236,442.753	PI
	CC							657,157.559	236,643.902	
	PT	42+54.195						656,965.699	236,571.689	339° 22' 28.57"
	PC	44+36.933						656,901.328	236,742.714	339° 22' 28.57"
BYPASS-3	PI	45+43.397	39° 04' 39.11" LT	19° 05' 54.94"	300.000'	106.464'	204.609'	656,863.826	236,842.354	PI

ALIGNMENT TABULATION - (825TH) 825TH STREET

POINT NUMBER	POINT	STATION	CURVE DATA					COORDINATES		AZIMUTH
			DELTA	DEGREE	RADIUS	TANGENT	LENGTH			
			SPIRAL CURVE DATA					X	Y	
			ANGLE (Os)	DEGREE	ST	LT	LS			
1930	PI	202+02.669	16° 55' 01.9" RT	11° 27' 33.0"	500.000'	74.356'	147.630'	655,298.117	238,080.603	PI
	CC							655,679.027	237,748.283	
	PT	202+75.943						655,354.710	238,128.833	49° 33' 40.5"
	PC	205+41.644						655,556.934	238,301.176	49° 33' 40.5"
1935	PI	206+61.644	90° 00' 00.0" LT	47° 44' 47.3"	120.000'	120.000'	188.496'	655,648.266	238,379.012	PI

ALIGNMENT TABULATION - (TH63-SLIP) T.H. 63 SLIP

POINT NUMBER	POINT	STATION	CURVE DATA					COORDINATES		AZIMUTH
			DELTA	DEGREE	RADIUS	TANGENT	LENGTH			
			SPIRAL CURVE DATA					X	Y	
			ANGLE (Os)	DEGREE	ST	LT	LS			
	PC	113+00.000						656,836.917	236,663.592	139° 33' 40.4"
1075	PI	113+60.936	24° 33' 19.2" RT	20° 27' 46.0"	280.000'	60.936'	120.000'	656,876.442	236,617.214	PI
	CC							656,623.809	236,481.974	
	PCC	114+20.000						656,893.119	236,558.605	164° 06' 59.7"
	PCC	114+20.000						656,893.119	236,558.605	164° 06' 59.7"
1080	PI	115+17.902	57° 05' 01.0" RT	31° 49' 51.6"	180.000'	97.902'	179.333'	656,919.913	236,464.441	PI
	PT	115+99.333						656,855.425	236,390.778	221° 12' 00.6"

ALIGNMENT TABULATION - (BLUFF) BLUFF ST.

POINT NUMBER	POINT	STATION	CURVE DATA					COORDINATES		AZIMUTH
			DELTA	DEGREE	RADIUS	TANGENT	LENGTH			
			SPIRAL CURVE DATA					X	Y	
			ANGLE (Os)	DEGREE	ST	LT	LS			
1255	PI	54+00.605	23° 38' 22.1" LT	114° 35' 29.6"	50.000'	10.464'	20.629'	656,926.355	236,497.852	PI
	CC							656,901.679	236,453.124	
	PT	54+10.771						656,916.352	236,500.923	287° 03' 56.0"
1260	POT	56+11.947						656,724.034	236,559.961	

REVISION					
NO.	DATE	DESCRIPTION	DR.	CHK.	APP'D.

HDR

TITLE: ALIGNMENT TABULATIONS

DES: GB	DR: DJR	APPROVED:
CHK: JZB	CHK: JZB	

STATE PROJECT NO. 2515-21

SHEET NO. 4 OF 9 SHEETS

BRIDGE NO. 25034

dregbel
11/4/2015 1:16:00 PM
c:\pwworking\omo\d1023587\00000000017092\13.00_CAD\Bridge\Plan Shts\Br25034 Over TH61\5003
pw:\\PWPPDMA001:Northcentral.Omaha\Documents\007569\00000000017092.tbl

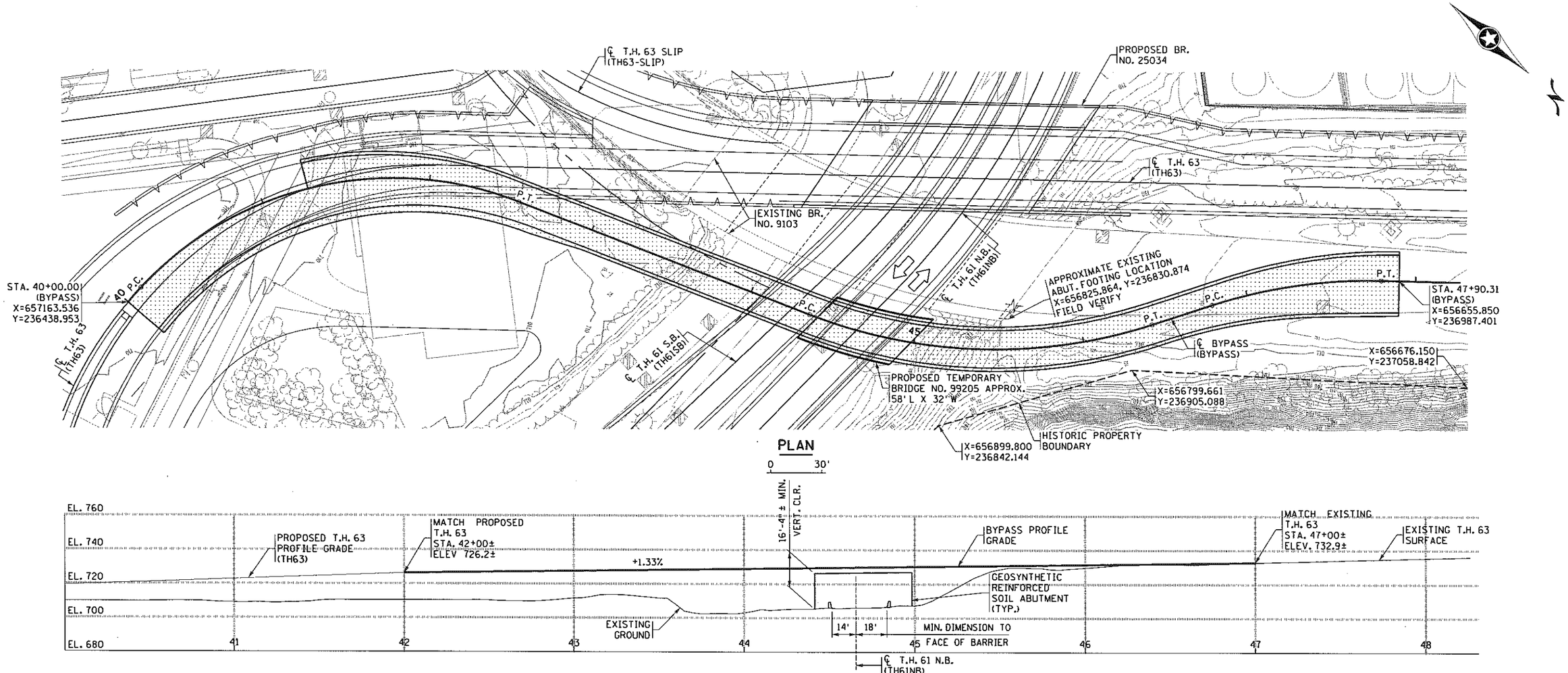

PLAN

0 30'

ELEVATION

0 30'

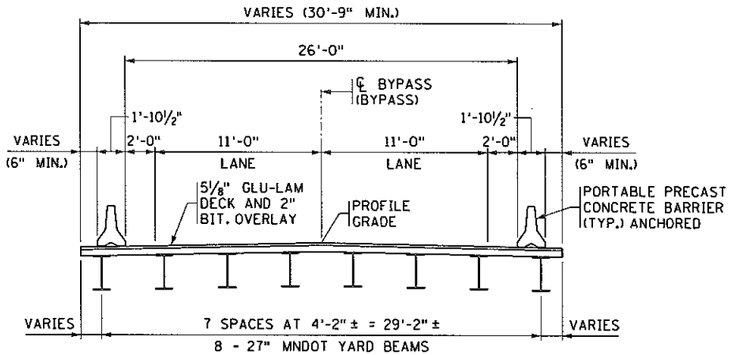

TRANSVERSE SECTION BR. 99205

0 5'

NOTES:

BYPASS DESIGN SPEED = 30 MPH

FOR ALIGNMENT INFORMATION, SEE SHEET 4.

BYPASS ALIGNMENT, PROFILE AND BRIDGE GEOMETRY AND TYPE SHOWN IN CONCEPT FOR INFORMATION ONLY. TO BE DETERMINED IN FINAL DESIGN.

BRIDGE DESIGNER TO DETERMINE WHERE EXISTING DECK AND SUPERSTRUCTURE CAN BE CUT AND CLEARANCE NEEDED BETWEEN EXISTING AND NEW CONSTRUCTION. BRIDGE AND ROAD FINAL DESIGN TO COORDINATE STAGING SEQUENCE AND TEMPORARY LANE WIDTHS.

BYPASS DETERMINED TO BE MORE ECONOMICAL FOR REMOVAL OF EXISTING BRIDGE 9103 AND CONSTRUCTION OF PROPOSED BRIDGE 25034 THAN STAGED CONSTRUCTION. SEE MEMO DATED FEB. 25, 2015.

DENOTES BYPASS SURFACE

ASSUMES CONSTRUCTION POSTED SPEED LIMIT OF 30 MPH OR LESS.

TEMPORARY SHORING LIMITS TO BE DEVELOPED IN FINAL DESIGN.

PARTIAL REMOVAL OF BRIDGE 9103 IS NOT ANTICIPATED. ADDITIONAL INVESTIGATION IN FINAL DESIGN IS REQUIRED.

REVISION					
NO.	DATE	DESCRIPTION	DR.	CHK.	APP'D.

HDR

TITLE: STAGING CONCEPT

DES: DJR	DR: DJR	APPROVED:
CHK: JZB	CHK: JZB	

STATE PROJECT NO. 2515-25034

SHEET NO. 5 OF 9 SHEETS

BRIDGE NO. 25034

drachel 1:58:08 PM 11/4/2015

c:\pwworking\omo\d1023587\000000000177092.tbl
pw:\\PWAPPOMA001:NorthCentral_Omaha\Documents\007569\000000000177092\13.00_CAD\Bridge\Plan Shts\Br25034 Over TH61\5004

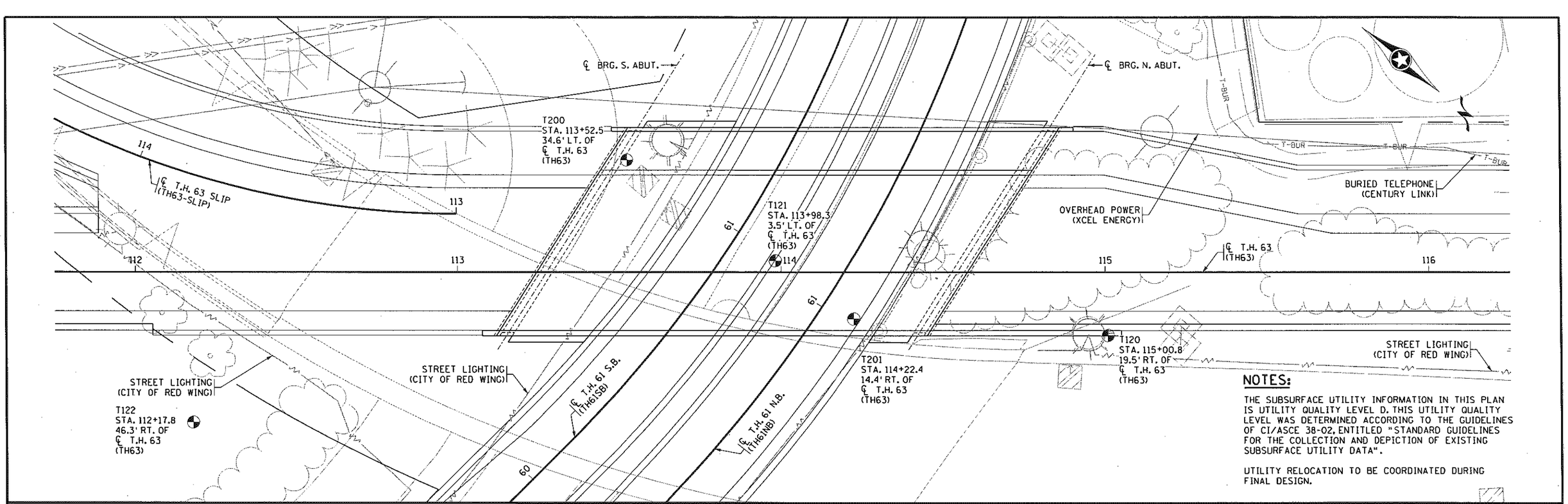

NOTES:

THE SUBSURFACE UTILITY INFORMATION IN THIS PLAN IS UTILITY QUALITY LEVEL D. THIS UTILITY QUALITY LEVEL WAS DETERMINED ACCORDING TO THE GUIDELINES OF CI/ASCE 38-02, ENTITLED "STANDARD GUIDELINES FOR THE COLLECTION AND DEPICTION OF EXISTING SUBSURFACE UTILITY DATA".

UTILITY RELOCATION TO BE COORDINATED DURING FINAL DESIGN.

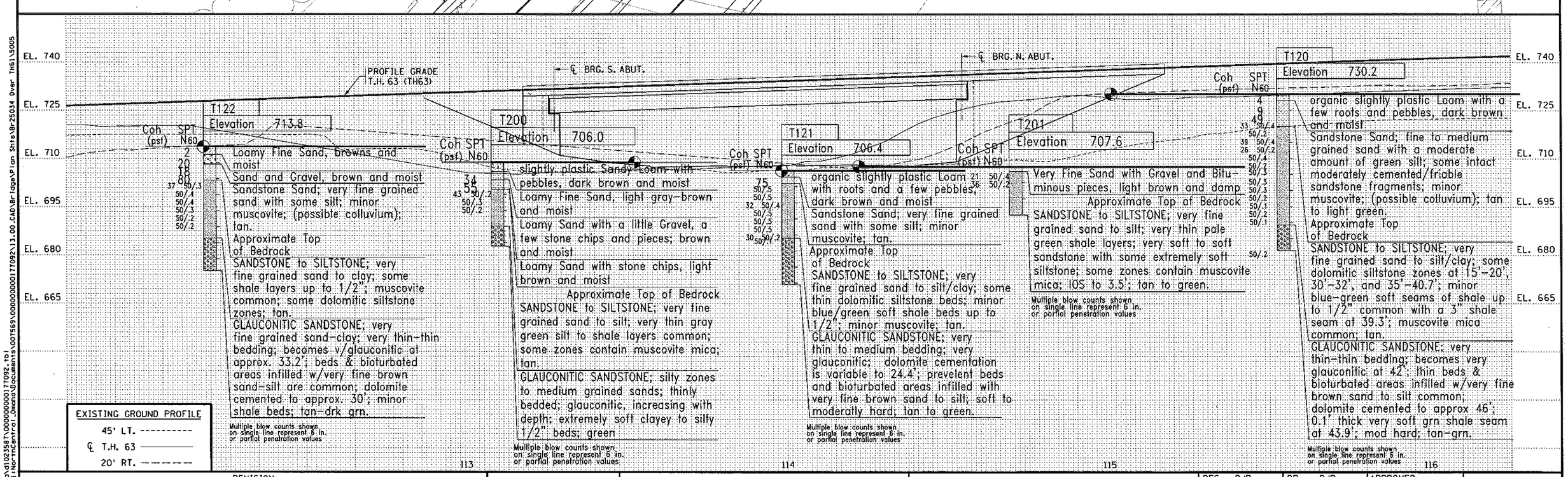

EXISTING GROUND PROFILE
45' LT. ----------
℄ T.H. 63 ———
20' RT. — — — —

REVISION					
NO.	DATE	DESCRIPTION	DR.	CHK.	APP'D.

HDR

TITLE: BORINGS

DES: DJR	DR: DJR	APPROVED:
CHK: JZB	CHK: JZB	

STATE PROJECT NO. 2515-25034

SHEET NO. 6 OF 9 SHEETS

BRIDGE NO. 25034

drachel
11/9/2015 8:18:18 PM
c:\Dwworking\mnd102587\000000000177092\13.00_CAD\BridgePlan Sht\Br25034 Over TH61\5005
pw:\\PWAPPDMA001.NorthCentral.Sinaia\Documents\GOT565\000000000177092.rbl

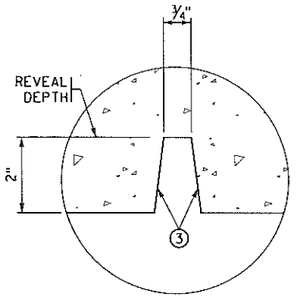

SECTION A-A

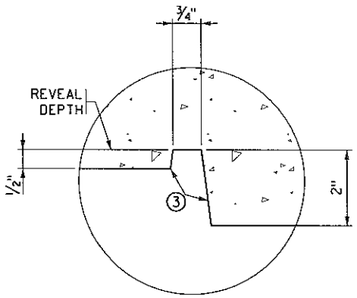

SECTION B-B

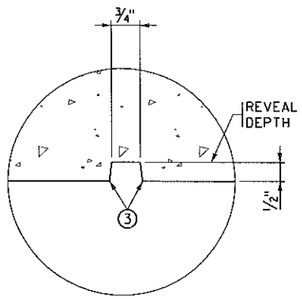

SECTION C-C

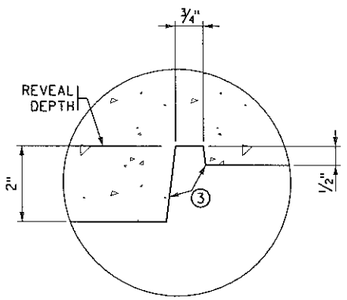

SECTION D-D

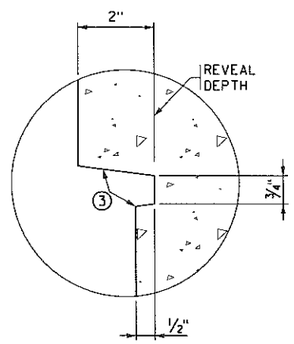

SECTION E-E

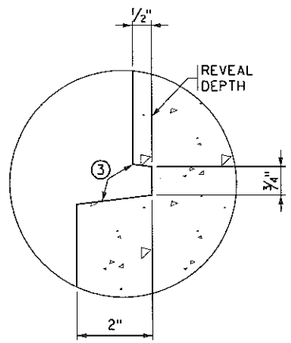

SECTION F-F

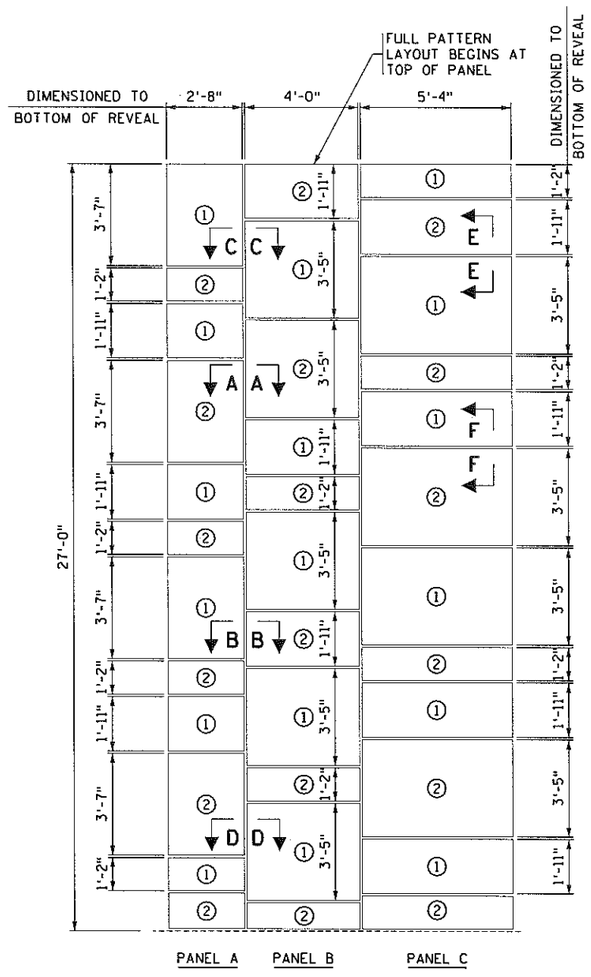

PANEL DETAILS

NOTES:

FOR ADDITIONAL AESTHETIC DETAILS INCLUDING THE RED WING LOGO, COLORS, TEXTURES AND TREATMENTS SEE THE VISUAL QUALITY MANUAL.

ALL REVEALS TO BE AT A DEPTH OF 0".

① DENOTES +½" FROM REVEAL DEPTH

② DENOTES +2" FROM REVEAL DEPTH

③ ALL REVEAL SLOPES 1:8

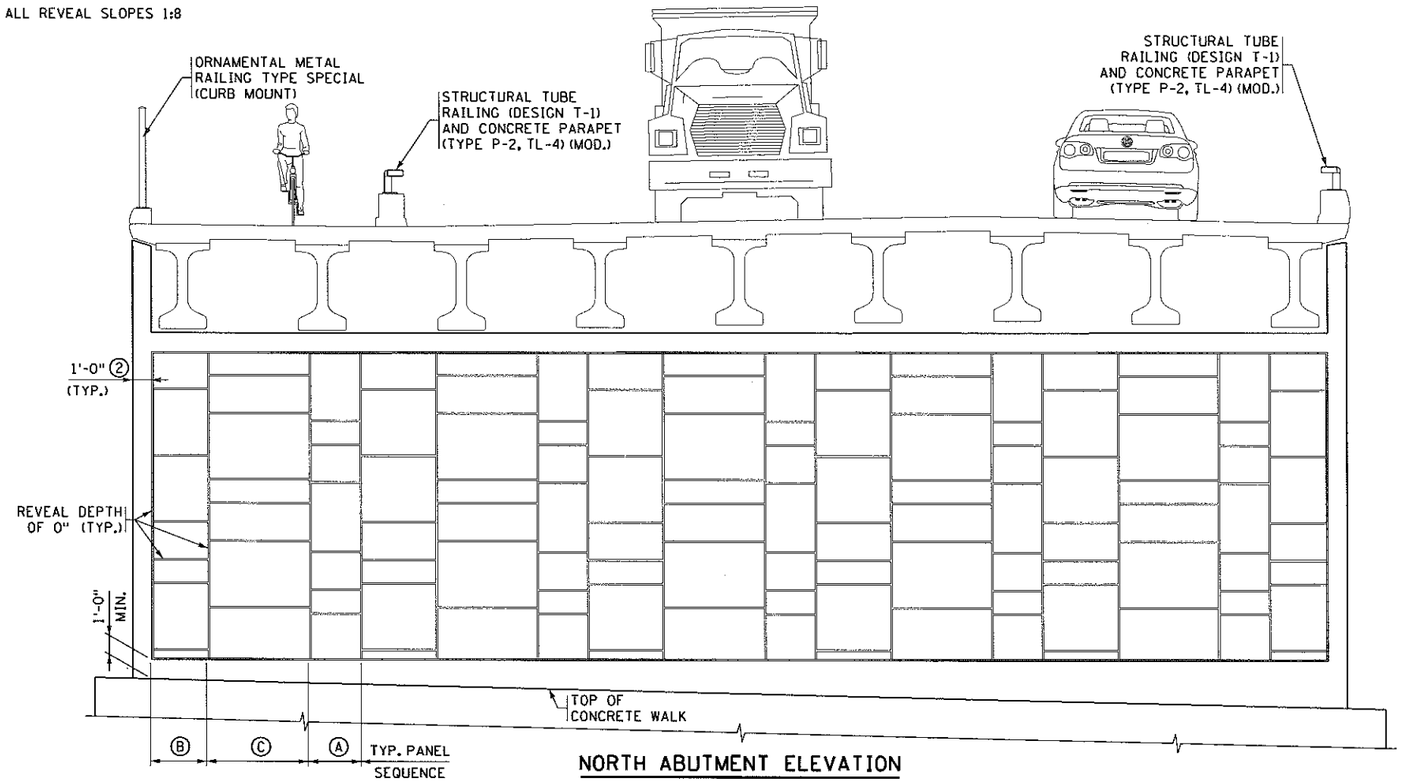

NORTH ABUTMENT ELEVATION

SOUTH ABUTMENT SIMILAR
(SEE BARRIER SECTIONS FOR MASK WALL DETAILS)

REVISION					
NO.	DATE	DESCRIPTION	DR.	CHK.	APP'D.

HDR

TITLE:

AESTHETIC DETAILS
SHEET 1 OF 3

DES: DJR	DR: DJR	APPROVED:
CHK: JZB	CHK: JZB	

STATE PROJECT NO. 2515-25034

SHEET NO. 7 OF 9 SHEETS

BRIDGE NO. 25034

dfscpal
11/30/2015 1:58:30 PM

c:\projworking\d0102588\000000000177092\13.00_CAD\BridgePlan Shts\Br25034 Over TH61\5006
pw:\\PWAPPDMA01.NorthCentral.Local:Documents\007569\000000000177092\13.00_CAD\BridgePlan Shts\Br25034 Over TH61\5005

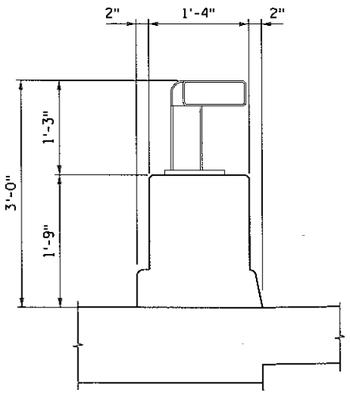

SECTION THRU P-2 BARRIER (MOD.)

(BETWEEN TRAIL AND TRAFFIC)

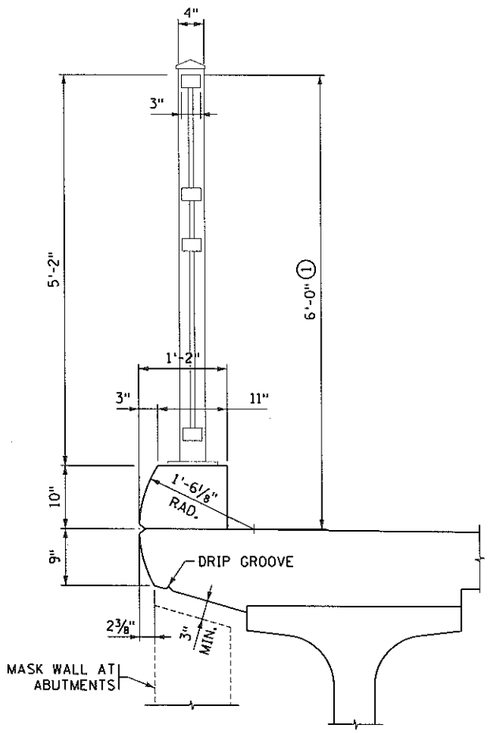

SECTION THRU ORNAMENTAL METAL RAILING

(AT WEST FASCIA)

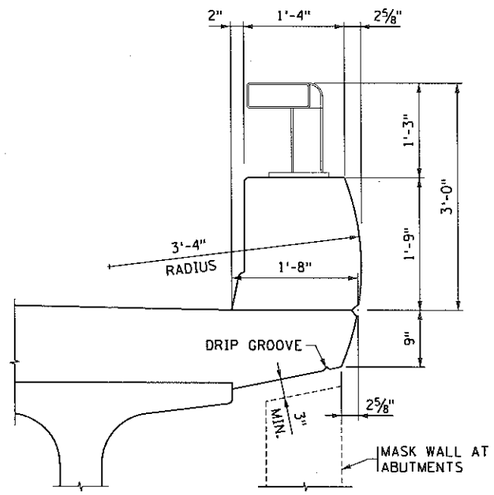

SECTION THRU P-2 BARRIER (MOD.)

(AT EAST FASCIA)

NOTES:

SEE AESTHETIC DETAILS SHEET 1 OF 3 FOR ADDITIONAL NOTES AND PANEL DETAILS.

FOR ADDITIONAL AESTHETIC DETAILS INCLUDING LOGO, COLORS, TEXTURES AND TREATMENTS SEE THE VISUAL QUALITY MANUAL.

FOR ADDITIONAL ORNAMENTAL METAL RAILING DETAILS SEE SEE AESTHETIC DETAILS SHEET 3 OF 3.

① METAL RAILING TO MEET REQUIREMENTS FOR PROTECTIVE SCREENING PER MNDOT BRIDGE DESIGN MANUAL 13.2.5.

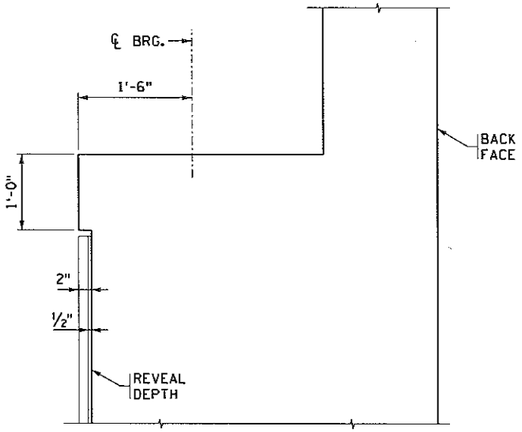

ABUTMENT SECTION

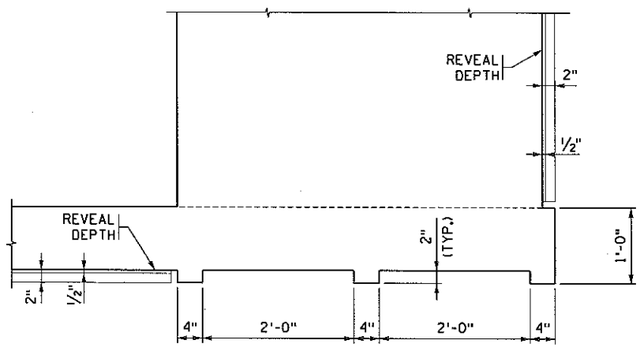

SECTION G-G

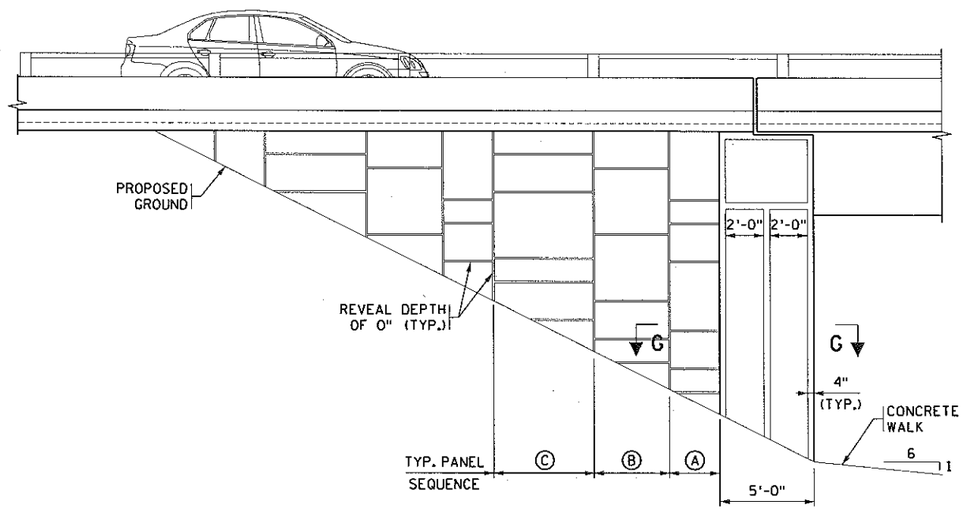

ABUTMENT/WINGWALL ELEVATION

(SOUTHEAST WINGWALL SHOWN, OTHERS SIMILAR)

REVISION					
NO.	DATE	DESCRIPTION	DR.	CHK.	APP'D.

HDR

TITLE: AESTHETIC DETAILS SHEET 2 OF 3

DES: DJR	DR: DJR	APPROVED:
CHK: JZB	CHK: JZB	

STATE PROJECT NO. 2515-25034

SHEET NO. 8 OF 9 SHEETS

BRIDGE NO. 25034

drachel
1:58:39 PM
11/4/2015
c:\pwworking\oma\d1023587\000000000177092.tbl
pw:\\PWAPPOMA001:NorthCentral_Omaha\Documents\007569\000000000177092\13.00_CAD\Bridge\Plan Shts\Br25034 Over TH61\5007

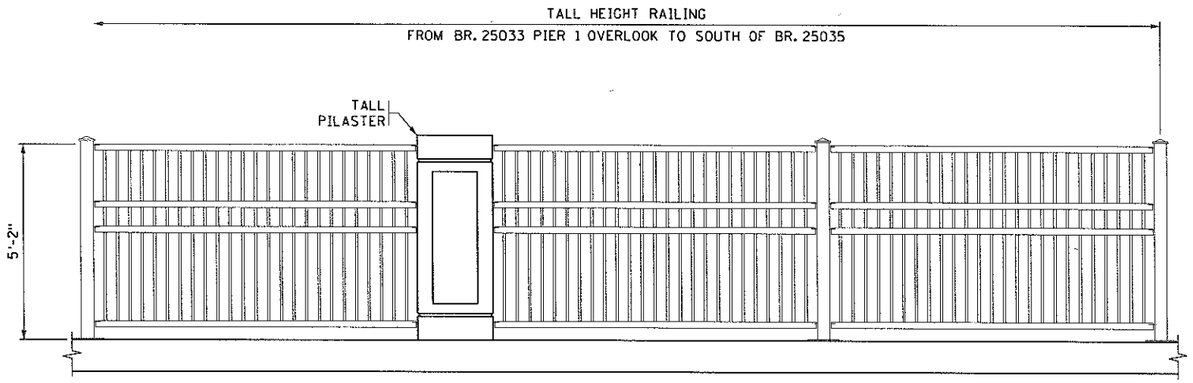

ORNAMENTAL METAL RAILING ELEVATION①

INSIDE VIEW (TALL HEIGHT)

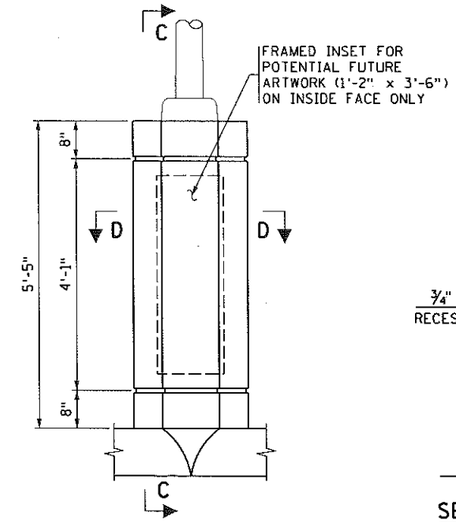

PILASTER WITH LIGHT

OUTSIDE VIEW

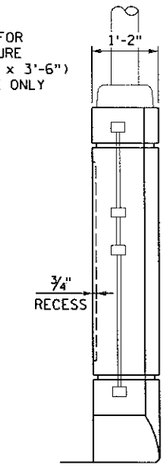

SECTION C-C

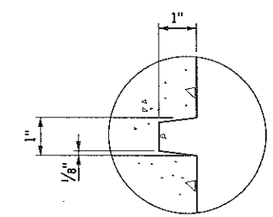

REVEAL DETAIL

TYPICAL ALL PILASTERS

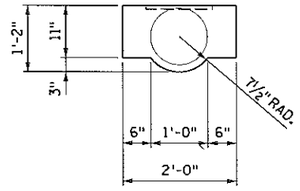

SECTION D-D

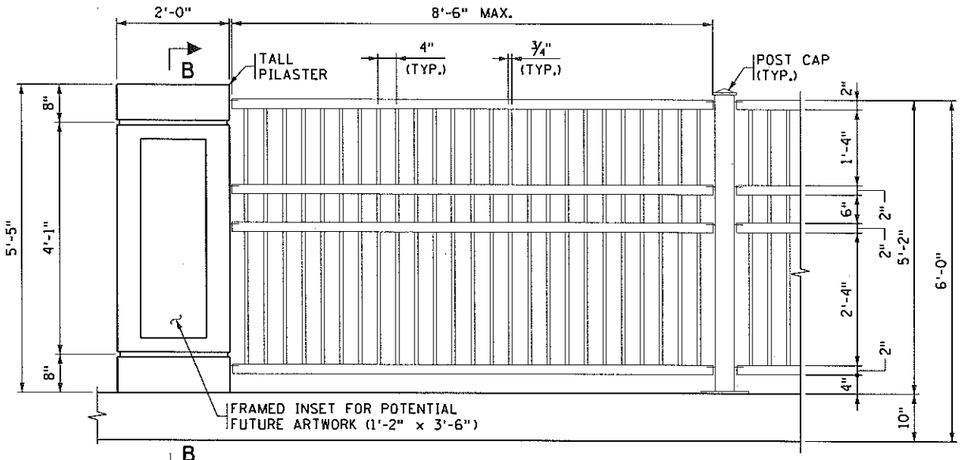

ORNAMENTAL METAL RAILING PANEL

INSIDE VIEW (TALL HEIGHT)

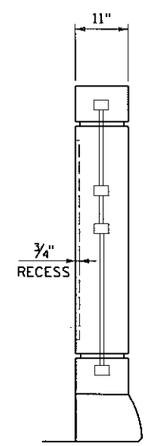

SECTION B-B

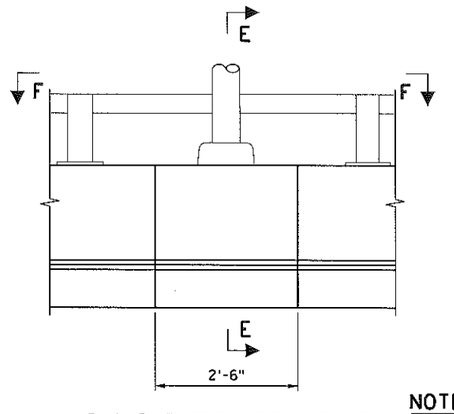

P-2 BARRIER WITH LIGHT

OUTSIDE VIEW

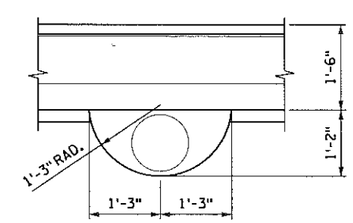

SECTION F-F

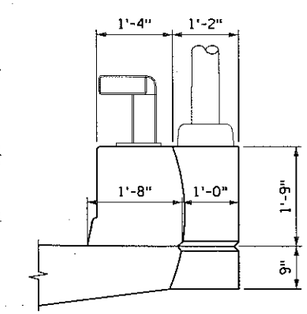

SECTION E-E

NOTES:

FOR ADDITIONAL AESTHETIC DETAILS INCLUDING LOGO, COLORS, TEXTURES AND TREATMENTS SEE THE VISUAL QUALITY MANUAL.

SEE VQM FOR LIGHT STANDARD AND PILASTER SPACING REQUIREMENTS. TO BE DEVELOPED DURING FINAL DESIGN. (PILASTERS TO BE LOCATED AT ALL LIGHT STDS.).

① TALL HEIGHT RAILING CONTINUES ON RETAINING WALLS ON BOTH ENDS OF BRIDGE. COORDINATE CONNECTION DETAIL AND LOCATION BETWEEN BRIDGE AND ROAD FINAL DESIGN.

REVISION					
NO.	DATE	DESCRIPTION	DR.	CHK.	APP'D.

HDR

TITLE: AESTHETIC DETAILS SHEET 3 OF 3

DES: DJR	DR: DJR	APPROVED:
CHK: JZB	CHK: JZB	

STATE PROJECT NO. 2515-25034

SHEET NO. 9 OF 9 SHEETS

BRIDGE NO. 25034

drachel 1:58:49 PM 11/4/2015
c:\pwworking\oma\d1023587\000000000177092.tbl
pw:\\PWAPPOMA001:NorthCentral_Omaha\Documents\007569\000000000177092\13.00_CAD\Bridge\Plan Shts\Br25034 Over TH61\5008