2037 PROJECTED TRAFFIC VOLUMES

ROADWAY OVER		ROADWAY UNDER
6415	A.D.T.	N/A
1155	D.H.V.	N/A
475	A.D.T.T.	N/A

DESIGN DATA

DESIGNED IN ACCORDANCE WITH 2016 AND CURRENT INTERIM AASHTO LRFD BRIDGE DESIGN SPECIFICATIONS.
HL 93 LIVE LOAD

DEAD LOAD INCLUDES 20 PSF ALLOWANCE FOR FUTURE WEARING COURSE MODIFICATIONS.

MATERIAL DESIGN PROPERTIES:

REINFORCED CONCRETE:
f'c = 4 KSI
fy = 60 KSI PLAIN AND EPOXY COATED BARS
n = 8 FOR REINFORCEMENT

PRETENSIONED CONCRETE:
f'c = 9 KSI CONCRETE
fpu = 270 KSI LOW RELAXATION STRANDS
n = 1 FOR REINFORCEMENT
0.75fpu FOR INITIAL PRESTRESS

DESIGN SPEED:
OVER = 60 MPH UNDER = N/A MPH
APPROXIMATE DECK AREA: = 12264 SF
HL 93 LRFR
OPERATING RATING FACTOR RF = 2.23

LIST OF SHEETS

NO.	DESCRIPTION
1	GENERAL PLAN AND ELEVATION
2	TRANSVERSE SECTION & QUANTITIES
3	BRIDGE LAYOUT
4-7	SOUTH ABUTMENT DETAILS
8-13	SOUTH ABUTMENT REINFORCEMENT
14-17	NORTH ABUTMENT DETAILS
18-23	NORTH ABUTMENT REINFORCEMENT
24-25	PIER 1 DETAILS
26-29	PIER 1 REINFORCEMENT
30-31	PIER 2 DETAILS
32-35	PIER 2 REINFORCEMENT
36-37	MN63 PRESTRESSED CONC. BEAM DETAILS
38	FRAMING PLAN
39-41	SUPERSTRUCTURE DETAILS & REINFORCEMENT
42	CONCRETE BARRIER (TYPE F, TL-4)
43-44	EXPANSION JOINT DEVICE DETAILS
45	RIPRAP SLOPES WITH GEOTEXTILE FILTER
46-50	BRIDGE DETAILS
51	AS-BUILT DATA
52	BRIDGE SURVEY
53	BORINGS
54	BRIDGE SURVEY - INPLACE BR. 3282 & 5959

NOTES:

SEE SHEET 53 FOR COMPLETE INPLACE UTILITIES.

APPROXIMATELY 1300 SQ. FT. OF WATERWAY IS AVAILABLE BELOW EL. 969.6.

(2) SEE SHEET NO. 54 FOR ASSUMED PILE LAYOUT FOR BRIDGE NO. 3282 AND BR. NO. 5959 FROM 1941 TO PRESENT AT THIS LOCATION.

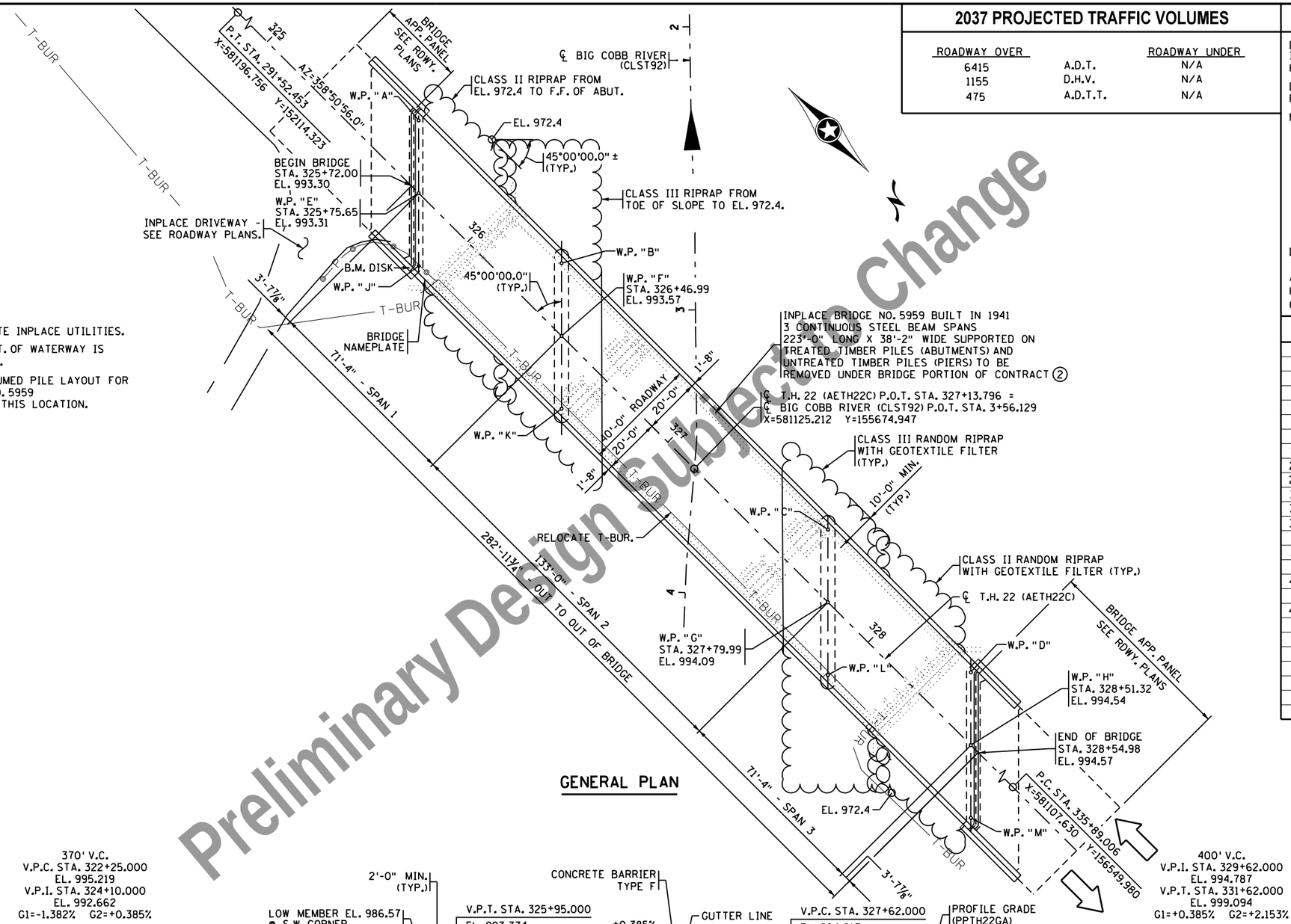

GENERAL PLAN

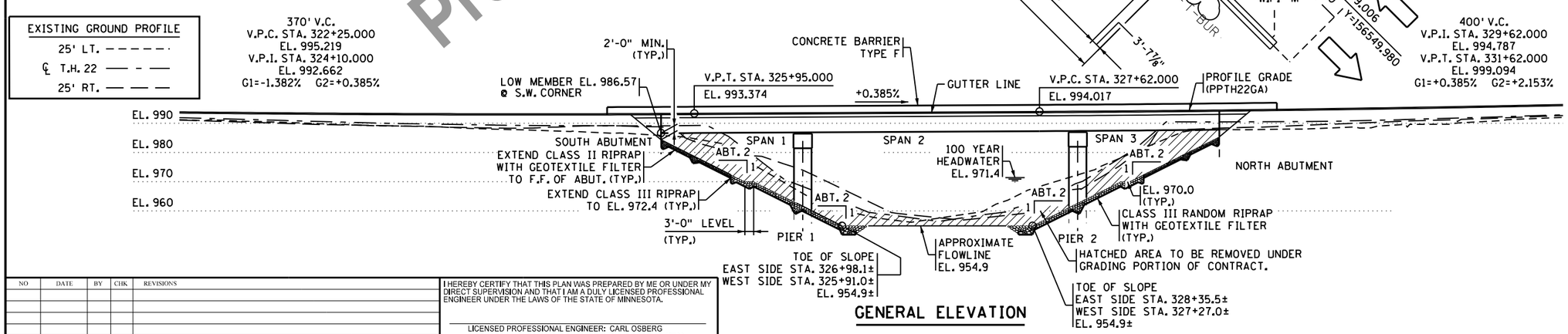

GENERAL ELEVATION

Preliminary Design Subject to Change

WSB & Associates, Inc.
701 Xenia Avenue
Suite 300
Minneapolis, MN 55416
763-541-4800
FAX 763-541-1700
INFRASTRUCTURE - ENGINEERS - PLANNERS

MINNESOTA DEPARTMENT OF TRANSPORTATION

Bridge No. 07051

T.H. 22 OVER BIG COBB RIVER
4.8 MILES NORTH OF MAPLETON

71'-133'-71' PRESTRESSED BEAM SPANS
40'-0" ROADWAY WIDTH, 45° SKEW

GENERAL PLAN & ELEVATION

SPAN IDENTIFICATION NO. 501
SEC. 9 TWP. 106N R. 26W
BEAUFORD TWP. BLUE EARTH COUNTY

APPROVED: _____ _____
STATE BRIDGE ENGINEER DATE

DES: JH	DR: DJV	07051
CHK: CBO	CHK: CBO	

NO	DATE	BY	CHK	REVISIONS

I HEREBY CERTIFY THAT THIS PLAN WAS PREPARED BY ME OR UNDER MY DIRECT SUPERVISION AND THAT I AM A DULY LICENSED PROFESSIONAL ENGINEER UNDER THE LAWS OF THE STATE OF MINNESOTA.

LICENSED PROFESSIONAL ENGINEER: CARL OSBERG
DATE: 8/12/2016 REG NO: 42732

DESIGN REVIEW UNIT: ANGEL STAPLES | JOB NO. T7A527 | MINNESOTA PROJECT NO. STP SM | STATE PROJECT NO. 0704-07051 (T.H. 22=039)

SHEET NO. 1 OF 54 SHEETS

7/28/2016 10:35:26 AM
K:\03265-000\Cad\Plan\cbr-07051_gpe.dgn

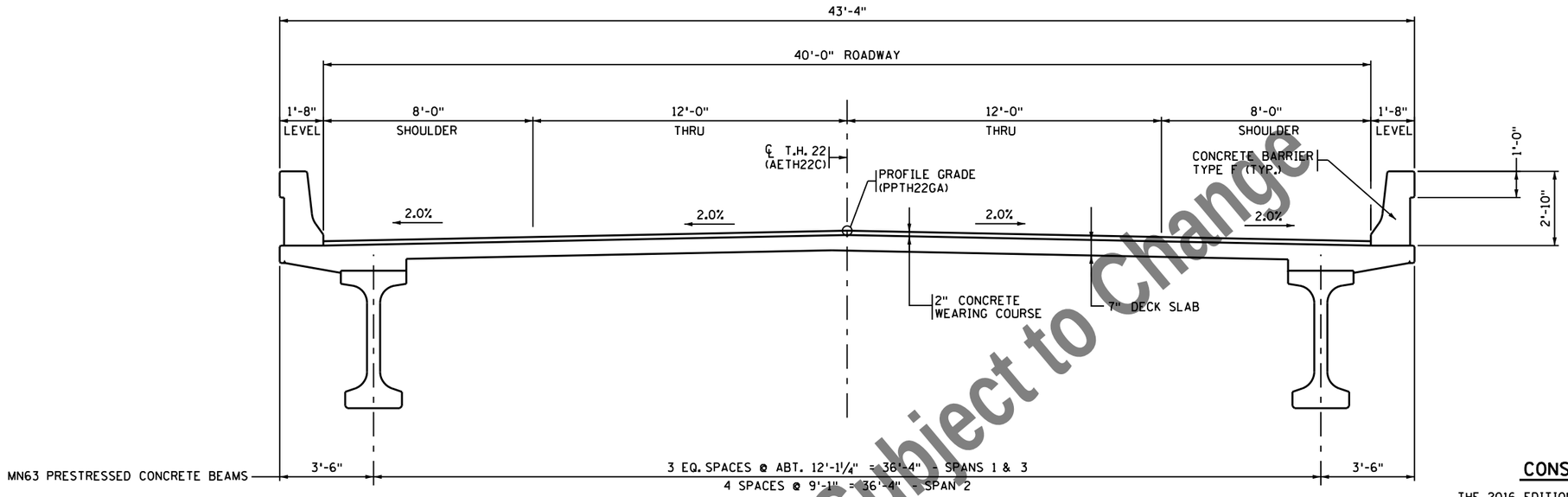

TRANSVERSE SECTION THRU DECK

Design Subject to Change
Preliminary

SCHEDULE OF QUANTITIES FOR BRIDGE NO. 07051			
ITEM NO.	ITEM	UNIT	QUANTITY
2401.501	STRUCTURAL CONCRETE (1G52)	CU. YD.	345 (P)
2401.501	STRUCTURAL CONCRETE (3B52)	CU. YD.	507 (P)
2401.513	TYPE F (TL-4) BARRIER CONCRETE (3S52)	LIN. FT.	647 (P)
2401.541	REINFORCEMENT BARS	POUND	32830 (P)
2401.541	REINFORCEMENT BARS (EPOXY COATED)	POUND	189700 (P)
2401.541	REINFORCEMENT BARS (STAINLESS STEEL)	POUND	1120 (P)
2401.601	STRUCTURE EXCAVATION	LUMP SUM	1
2401.601	FOUNDATION PREPARATION PIER 1	LUMP SUM	1
2401.601	FOUNDATION PREPARATION PIER 2	LUMP SUM	1
(1) 2401.618	BRIDGE SLAB CONCRETE (3YHPC-S)	SQ. FT.	12227 (P)
2402.591	EXPANSION JOINT DEVICES, TYPE 5	LIN. FT.	116 (P)
2402.595	BEARING ASSEMBLY	EACH	26
2404.501	CONCRETE WEARING COURSE (3U17A)	SQ. FT.	15432 (P)
2405.502	PRESTRESSED CONCRETE BEAMS MN63	LIN. FT.	1239 (P)
2405.511	DIAPHRAGMS FOR TYPE MN63 PRESTR BEAMS	LIN. FT.	291 (P)
2442.501	REMOVE EXISTING BRIDGE	LUMP SUM	1
2452.519	C-I-P CONC. TEST PILE, 80 FT LONG 12"	EACH	1
2452.519	C-I-P CONC. TEST PILE, 90 FT LONG 12"	EACH	1
2452.519	C-I-P CONC. TEST PILE, 75 FT LONG 16"	EACH	2
2452.527	PILE REDRIVING	EACH	4
2452.603	C-I-P CONCRETE PILING 12"	LIN. FT.	4350
2452.603	C-I-P CONCRETE PILING 16"	LIN. FT.	2730
2502.502	DRAINAGE SYSTEM TYPE (B910)	LUMP SUM	1
2511.501	RANDOM RIPRAP CLASS II	CU. YD.	205
2511.501	RANDOM RIPRAP CLASS III	CU. YD.	795
2511.515	GEOTEXTILE FILTER TYPE VII	SQ. YD.	1928

(1) INCLUDES SYNTHETIC FIBERS. SEE SPECIAL PROVISIONS

CONSTRUCTION NOTES

THE 2016 EDITION OF THE MINNESOTA DEPARTMENT OF TRANSPORTATION "STANDARD SPECIFICATIONS FOR CONSTRUCTION" SHALL GOVERN.

SEE SPECIAL PROVISIONS FOR ALL XXXX.6XX SERIES PAY ITEMS FOR ADDITIONAL REQUIREMENTS.

THE BAR SIZES SHOWN IN THE PLAN ARE IN U.S. CUSTOMARY DESIGNATIONS.

BARS MARKED WITH THE SUFFIX "E" SHALL BE EPOXY COATED IN ACCORDANCE WITH SPEC. 3301.

BARS MARKED WITH THE SUFFIX "S" SHALL BE STAINLESS STEEL IN ACCORDANCE WITH THE SPECIAL PROVISIONS.

BRIDGE SEAT REINFORCEMENT SHALL BE CAREFULLY PLACED TO AVOID INTERFERENCE WITH DRILLING HOLES FOR ANCHOR RODS. THE SUPERSTRUCTURE BEAMS SHALL BE ERECTED IN FINAL POSITION PRIOR TO DRILLING HOLES FOR & PLACING ANCHOR RODS.

THE SUBSURFACE UTILITY INFORMATION IN THIS PLAN IS UTILITY QUALITY LEVEL D. THIS UTILITY QUALITY LEVEL WAS DETERMINED ACCORDING TO THE GUIDELINES OF CI/ASCE 38-02, ENTITLED "STANDARD GUIDELINES FOR THE COLLECTION AND DEPICTION OF EXISTING SUBSURFACE UTILITY DATA".

THE PILE LOADS SHOWN IN THE PLANS AND THE CORRESPONDING NOMINAL PILE BEARING RESISTANCE (Rn) WERE COMPUTED USING LRFD METHODOLOGY. PILE BEARING RESISTANCE DETERMINED IN THE FIELD SHALL INCORPORATE THE METHODS AND/OR FORMULAS DESCRIBED IN THE SPECIAL PROVISIONS.

CONSTRUCTION OF THE NORTH ABUTMENT SHALL NOT BE STARTED UNTIL THE APPROACH FILL AT THAT ABUTMENT HAS BEEN CONSTRUCTED TO THE FULL HEIGHT AND CROSS SECTION (AND ALLOWED TO SETTLE FOR 72 HOURS).

CONSTRUCTION OF THE SOUTH ABUTMENT SHALL NOT BE STARTED UNTIL THE APPROACH FILL AT THAT ABUTMENT HAS BEEN CONSTRUCTED TO THE FULL HEIGHT AND CROSS SECTION. IN ADDITION PLACE A 5 FOOT SURCHARGE FOR THE WIDTH OF THE ROADWAY TO REDUCE THE SETTLEMENT PERIOD. (ALLOW TO SETTLE FOR 30 DAYS).

TRAFFIC TO BE DETOURED DURING CONSTRUCTION.

PIER PILING TO BE DRIVEN TO A MINIMUM TIP ELEVATION OF 925.0 AND ABUTMENT PILING TO BE DRIVEN TO A MINIMUM ELEVATION OF 950.0

NO	DATE	BY	CHK	REVISIONS

I HEREBY CERTIFY THAT THIS PLAN WAS PREPARED BY ME OR UNDER MY DIRECT SUPERVISION AND THAT I AM A DULY LICENSED PROFESSIONAL ENGINEER UNDER THE LAWS OF THE STATE OF MINNESOTA.

LICENSED PROFESSIONAL ENGINEER: CARL OSBERG
DATE: 8/12/2016 REG NO: 42732

WSB & Associates, Inc.
701 Xenia Avenue South, Suite 300
Minneapolis, MN 55416
www.wsbeng.com
763-541-4800 - Fax 763-541-1700
INFRASTRUCTURE • ENGINEERING • PLANNING • CONSTRUCTION

BLUE EARTH COUNTY
MINNESOTA PROJ. NO. STP SM
STATE PROJECT NO. 0704-07051

TITLE: TRANSVERSE SECTION AND QUANTITIES

DES: JH	DR: DJV	APPROVED:
CHK: CBO	CHK: CBO	

Bridge No. 07051

7/28/2016 10:35:26 AM
K:\03265-000\Cad\Plan\cbr-0705l_qnt.dgn

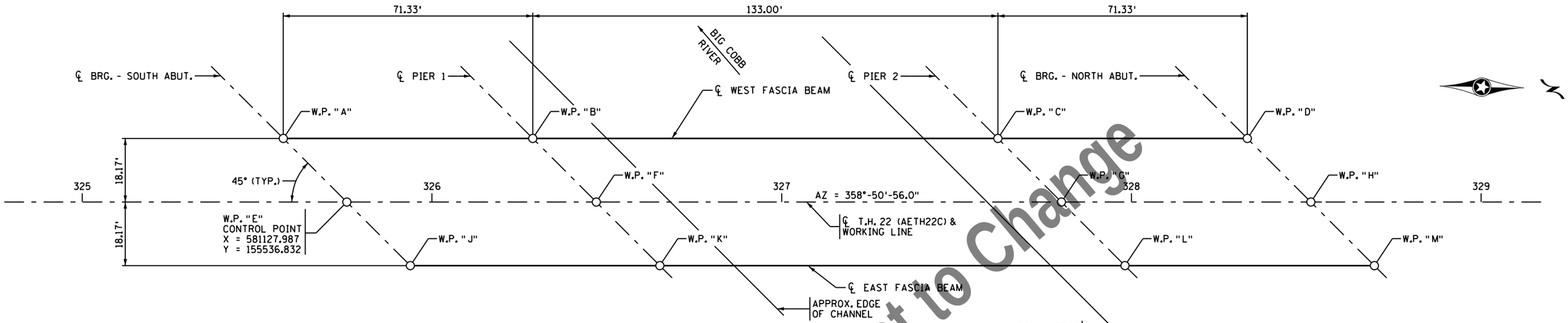

WORKING POINT LAYOUT

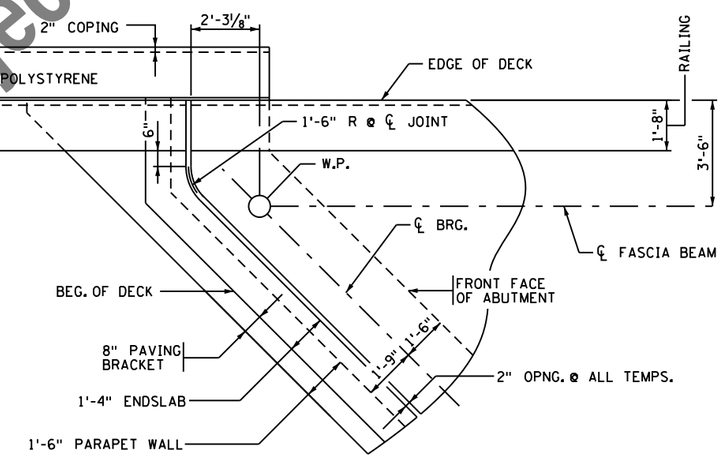

CORNER DETAIL

S.W CORNER SHOWN. N.E CORNER SIMILAR

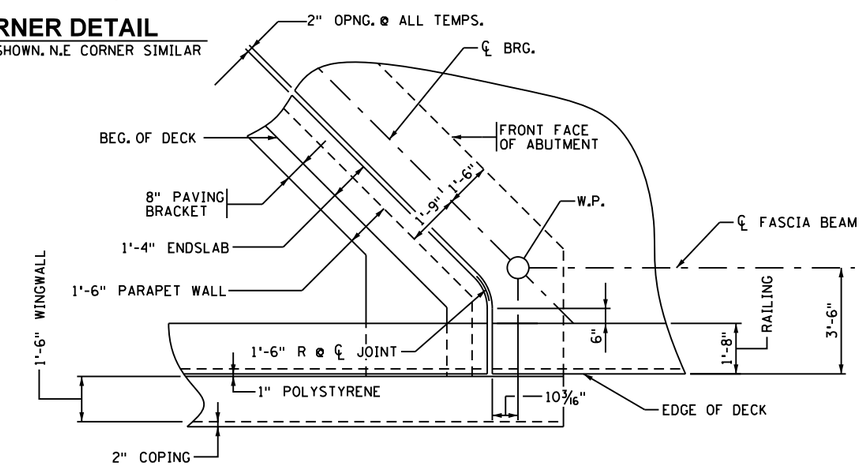

CORNER DETAIL

S.E. CORNER SHOWN. N.W. CORNER SIMILAR

TOP OF ROADWAY TO BRIDGE SEAT

	SLAB THICKNESS	STOOL HEIGHT	BEAM HEIGHT	BEARING HEIGHT	TOTAL
SOUTH ABUT.	9"	4"	63"	5 7/8"	6.82'
PIER 1	9"	4"	63"	3 1/2"	6.63'
PIER 2	9"	4"	63"	3 1/2"	6.63'
NORTH ABUT.	9"	4"	63"	5 7/8"	6.82'

DIMENSIONS BETWEEN WORKING POINTS / ELEVATIONS

POINT	STATION	X-COORD	Y-COORD	A	B	C	D	E	F	G	H	J	K	L	M	TOP OF DECK	TOP OF DECK TO BRIDGE SEAT	BRIDGE SEAT	POINT
A	325+57.49	581110.189	155518.304		71.33			25.69	91.33	223.24	294.39		113.63	243.39	314.11	992.90	6.82	986.08	A
B	326+28.82	581108.756	155589.623			133.00		56.18	25.69	152.25	223.24	50.45		173.19	243.39	993.14	6.63	986.51	B
C	327+61.82	581106.084	155722.596				71.33	187.05	116.26	25.69	91.33	171.88	103.27		113.63	993.65	6.63	987.02	C
D	328+33.15	581104.651	155793.915					258.14	187.05	56.18	25.69	242.08	171.88	50.45		994.04	6.82	987.22	D
E	325+75.65	581127.987	155536.832						71.33			25.69	91.33	223.24	294.39	993.31	——	——	E
F	326+46.99	581126.554	155608.151							133.00		56.18	25.69	152.25	223.24	993.57	6.63	986.94	F
G	327+79.99	581123.882	155741.124								71.33	187.05	116.26	25.69	91.33	994.09	6.63	987.46	G
H	328+51.32	581122.449	155812.443									258.14	187.05	56.18	25.69	994.54	——	——	H
J	325+93.82	581145.785	155555.360										71.33			993.01	6.82	986.19	J
K	326+65.15	581144.352	155626.679											133.00		993.28	6.63	986.65	K
L	327+98.15	581141.680	155759.652												71.33	993.82	6.63	987.19	L
M	328+69.49	581140.247	155830.971													994.32	6.82	987.50	M

Preliminary Design Subject to Change

NO	DATE	BY	CHK	REVISIONS

I HEREBY CERTIFY THAT THIS PLAN WAS PREPARED BY ME OR UNDER MY DIRECT SUPERVISION AND THAT I AM A DULY LICENSED PROFESSIONAL ENGINEER UNDER THE LAWS OF THE STATE OF MINNESOTA.

LICENSED PROFESSIONAL ENGINEER: CARL OSBERG
DATE: 8/12/2016 REG NO: 42732

WSB & Associates, Inc.
701 Xenia Avenue South, Suite 300
Minneapolis, MN 55416
www.wsbeng.com
763-541-4800 - Fax 763-541-1700
INFRASTRUCTURE • ENGINEERING • PLANNING • CONSTRUCTION

BLUE EARTH COUNTY
MINNESOTA PROJ. NO. STP SM
STATE PROJECT NO. 0704-07051

TITLE: BRIDGE LAYOUT

DES: JH	DR: DJV	APPROVED:
CHK: CBO	CHK: CBO	

Sheet 3 of 54 Sheets

Bridge No. 07051

7/28/2016 10:35:27 AM
K:\053265-000\Cad\Plan\cbr-0705l_wpl.dgn

SOUTH ABUTMENT REQUIRED NOMINAL PILE BEARING RESISTANCE FOR C.I.P. PILES R_n - TONS/PILE

FIELD CONTROL METHOD	ϕ dyn	* R_n
MN/DOT PILE FORMULA 2012 (MPF12) $R_n = 20\sqrt{\frac{W \times H}{1000}} \times \log(\frac{10}{S})$	0.50	158.0
PDA	0.65	121.5

* R_n = (FACTORED DESIGN LOAD) / ϕ dyn

SOUTH ABUTMENT COMPUTED PILE LOAD - TON / PILE

	SOUTH ABUT.
FACTORED DEAD LOAD + EARTH PRESSURE	59.1
FACTORED DOWNDRAG	71.5
** FACTORED DEAD LOAD + EARTH PRESSURE + DOWNDRAG	130.6

** BASED ON STRENGTH 1 LOAD COMBINATION, NOT INCLUDING TRANSIENT LOADS. ONLY USED FOR COMPARISON WITH FACTORED STRUCTURAL RESISTANCE. NOT TO BE USED FOR DRIVING.

SOUTH ABUTMENT COMPUTED PILE LOAD - TON / PILE

	SOUTH ABUT.
FACTORED DEAD LOAD + EARTH PRESSURE	59.1
FACTORED LIVE LOAD	19.9
*** FACTORED DESIGN LOAD	79.0

*** BASED ON STRENGTH 1 LOAD COMBINATION.

PILE NOTES

1 C-I-P CONCRETE TEST PILES 80 FT. LONG
29 C-I-P CONCRETE PILES EST. LENGTH 70 FT.
30 C-I-P CONCRETE PILES REQ'D FOR SOUTH ABUTMENT

PILE SPACING SHOWN IS AT BOTTOM OF FOOTING.

PILES MARKED ⊖► THUS TO BE BATTERED 3" PER FOOT IN THE DIRECTION SHOWN.

PILES TO HAVE A NOMINAL DIAMETER OF 12" AND A WALL THICKNESS OF 1/4".

FOR PILE SPLICE DETAILS SEE DETAIL B201.

PILE CUTOFF IS EL. 979.48

PILES TO BE DRIVEN TO A MINIMUM TIP ELEVATION OF 950.0

SUMMARY OF QUANTITIES - SOUTH ABUTMENT

	STRUCTURAL CONCRETE (1G52)	78	CU. YD.
	STRUCTURAL CONCRETE (3B52)	99	CU. YD.
	REINFORCEMENT BARS	4800	POUND
	REINFORCEMENT BARS (EPOXY COATED)	9720	POUND
	REINFORCEMENT BARS (STAINLESS STEEL)	560	POUND
	C-I-P CONCRETE TEST PILE 80 FT. LONG 12"	1	EACH
	C-I-P CONCRETE PILING 12"	2030	LIN. FT.
	PILE REDRIVING	1	EACH
1	MEMBRANE WATERPROOFING SYSTEM	71	LIN. FT.
	STRUCTURE EXCAVATION	1	LUMP SUM
	RANDOM RIPRAP CLASS II	102	CU. YD.
	RANDOM RIPRAP CLASS III	398	CU. YD.
	GEOTEXTILE FILTER TYPE VII	964	SQ. YD.

1 TO BE INCLUDED IN PRICE BID OTHER ITEMS

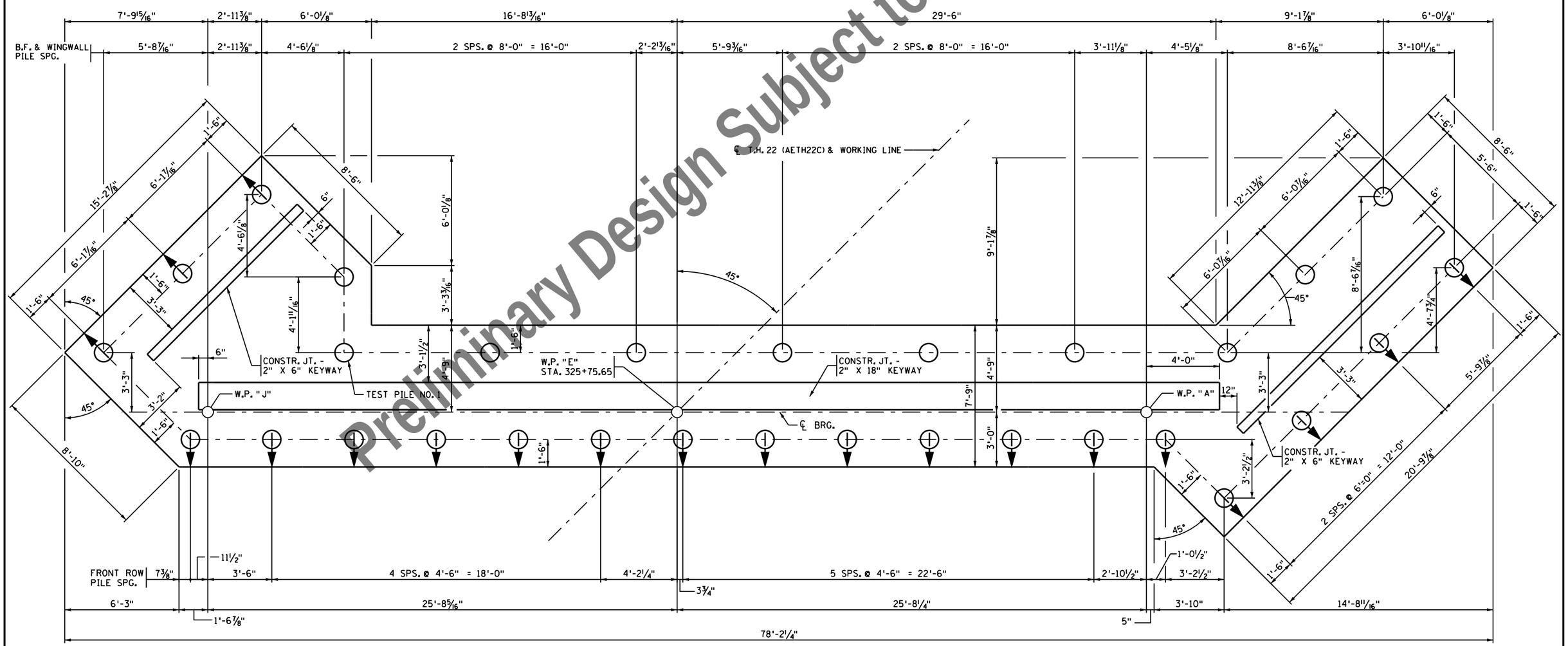

FOOTING - PLAN VIEW

Preliminary Design Subject to Change

NO	DATE	BY	CHK	REVISIONS

I HEREBY CERTIFY THAT THIS PLAN WAS PREPARED BY ME OR UNDER MY DIRECT SUPERVISION AND THAT I AM A DULY LICENSED PROFESSIONAL ENGINEER UNDER THE LAWS OF THE STATE OF MINNESOTA.

LICENSED PROFESSIONAL ENGINEER: CARL OSBERG
DATE: 8/12/2016 REG NO: 42732

WSB & Associates, Inc.
701 Xenia Avenue South, Suite 300
Minneapolis, MN 55416
www.wsbeng.com
763-541-4800 - Fax 763-541-1700
INFRASTRUCTURE • ENGINEERING • PLANNING • CONSTRUCTION

BLUE EARTH COUNTY
MINNESOTA PROJ. NO. STP SM
STATE PROJECT NO. 0704-07051

TITLE: SOUTH ABUTMENT DETAILS

DES: JH	DR: DJV	APPROVED:
CHK: CBO	CHK: CBO	

Sheet 4 of 54 Sheets

Bridge No. 07051

7/28/2016 10:35:27 AM
K:\03265-000\Cad\Plan\cbr-0705l_sabutl.dgn

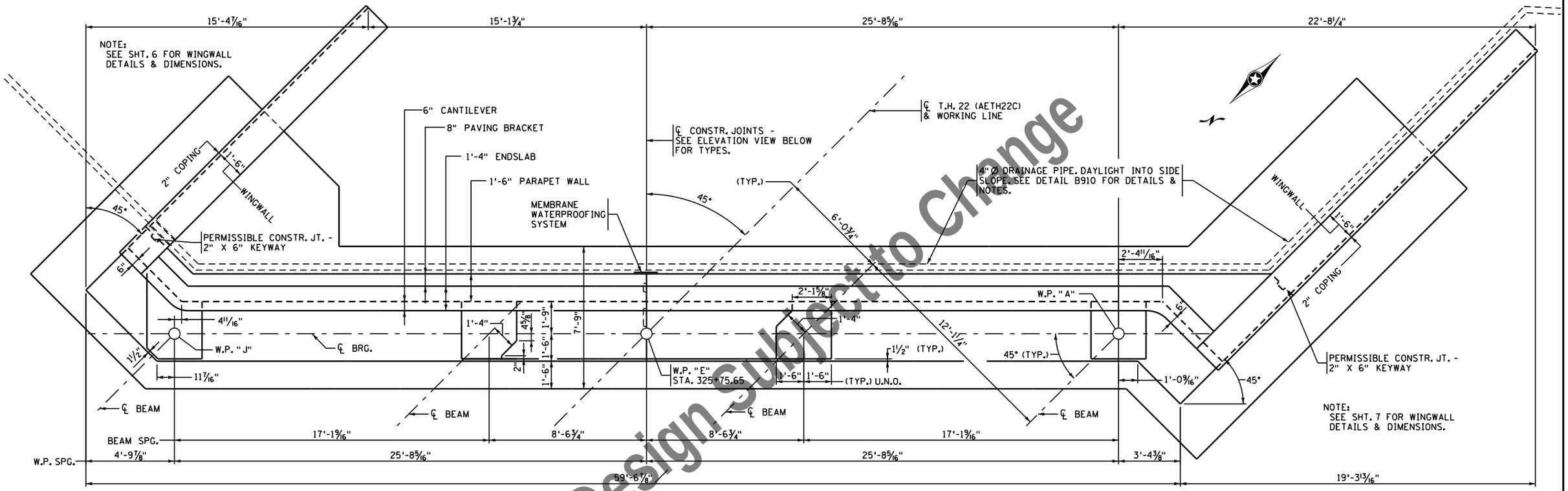

PLAN VIEW

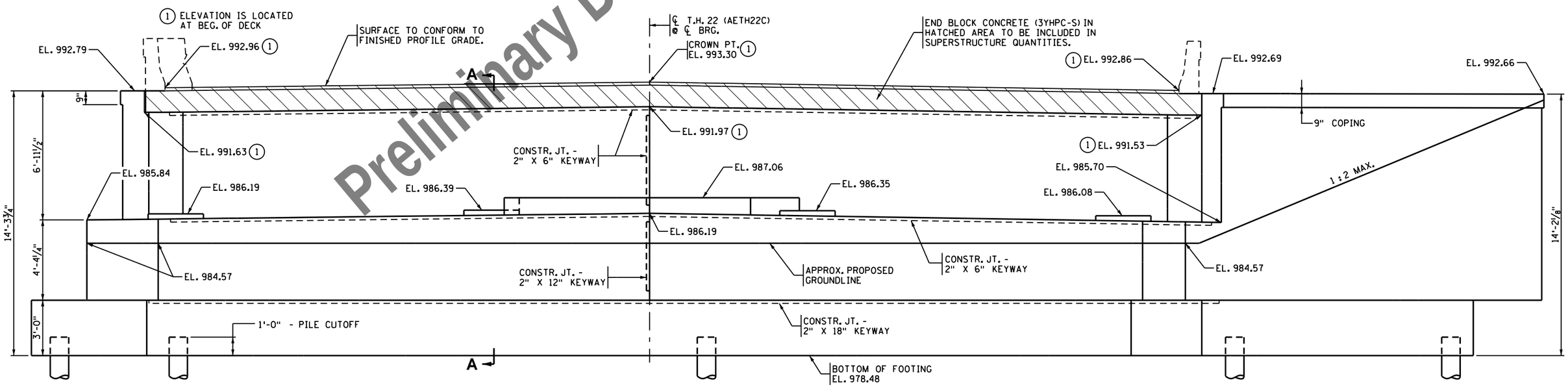

ELEVATION VIEW

NOTE:
SEE SHEET 6 FOR SECTION A-A

Preliminary Design Subject to Change

NO	DATE	BY	CHK	REVISIONS

I HEREBY CERTIFY THAT THIS PLAN WAS PREPARED BY ME OR UNDER MY DIRECT SUPERVISION AND THAT I AM A DULY LICENSED PROFESSIONAL ENGINEER UNDER THE LAWS OF THE STATE OF MINNESOTA.

LICENSED PROFESSIONAL ENGINEER: CARL OSBERG
DATE: 8/12/2016 REG NO: 42732

WSB & Associates, Inc.
701 Xenia Avenue South, Suite 300
Minneapolis, MN 55416
www.wsbeng.com
763-541-4800 - Fax 763-541-1700
INFRASTRUCTURE • ENGINEERING • PLANNING • CONSTRUCTION

BLUE EARTH COUNTY
MINNESOTA PROJ. NO. STP SM
STATE PROJECT NO. 0704-07051

TITLE: **SOUTH ABUTMENT DETAILS**

DES: JH	DR: DJV	APPROVED:
CHK: CBO	CHK: CBO	

Sheet 5 of 54 Sheets

Bridge No. 07051

7/28/2016 10:35:28 AM
K:\03265-000\Cad\Plan\cbr07051_sabut2.dgn

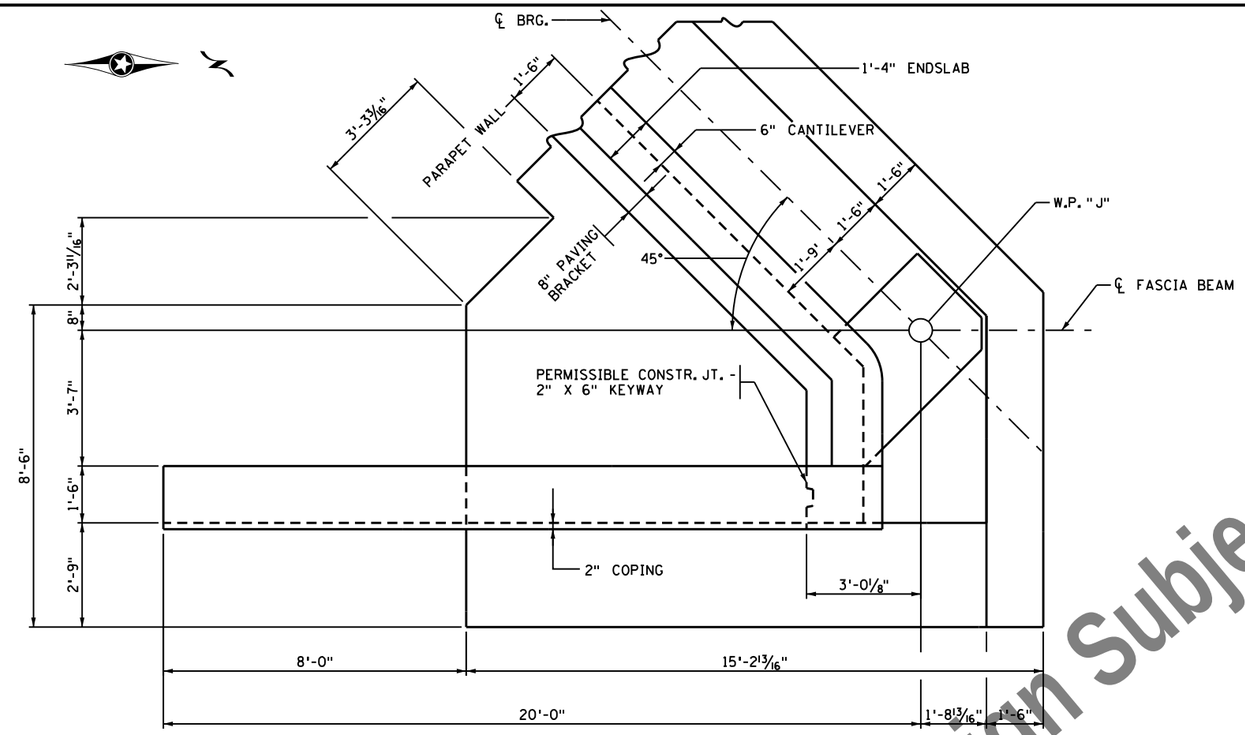

S.E. WINGWALL PLAN

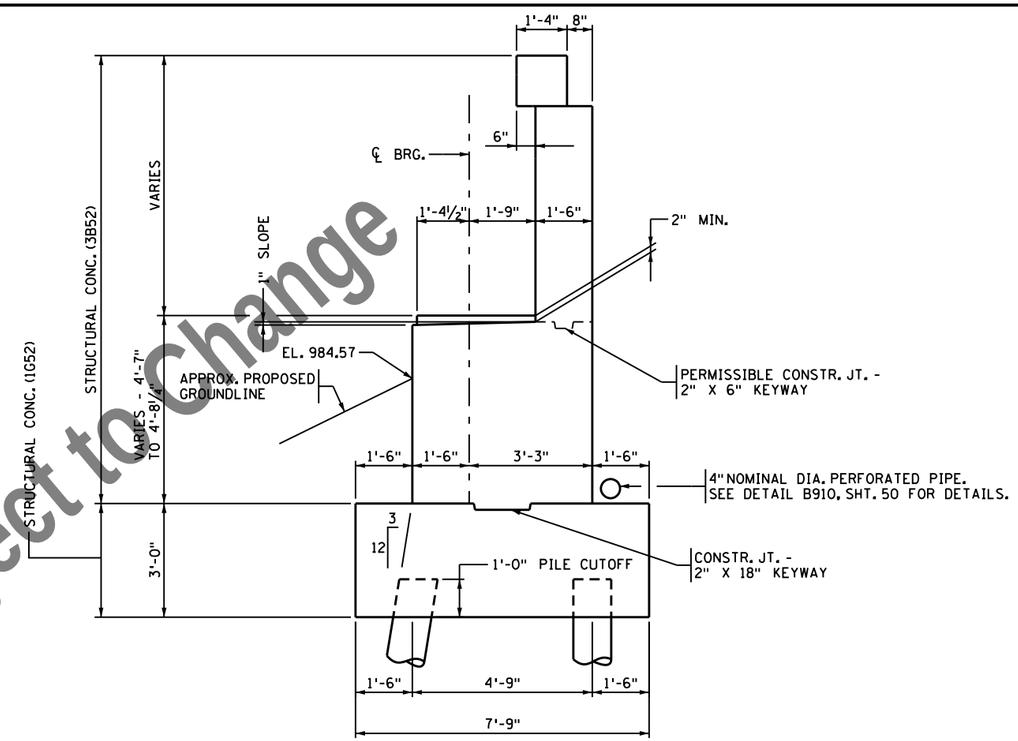

SECTION A-A

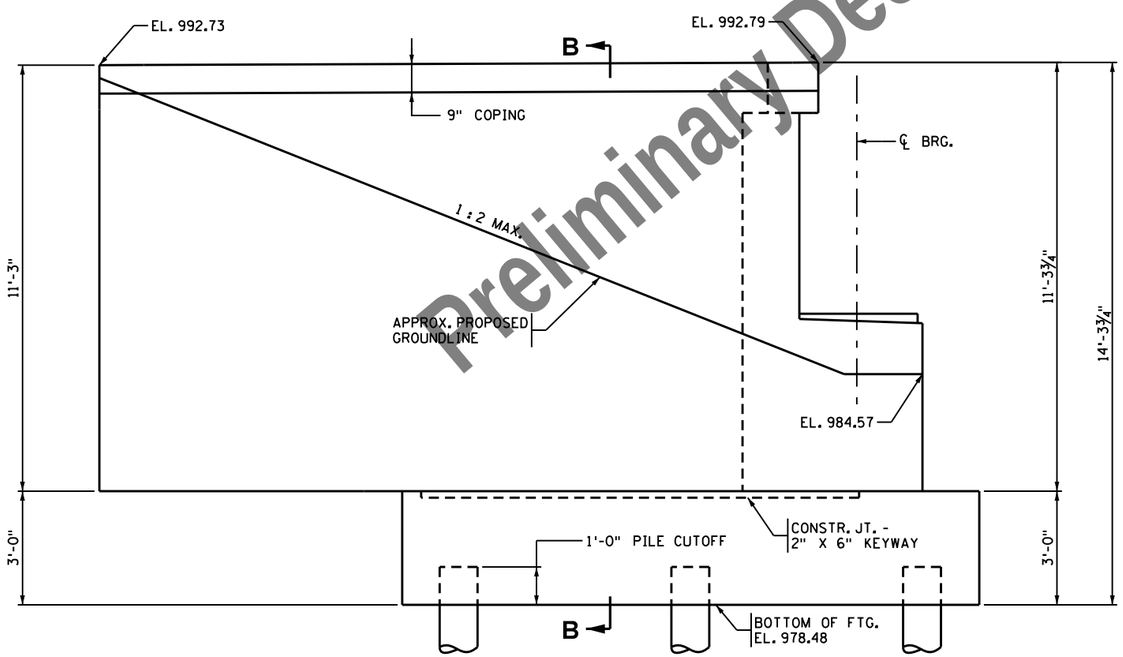

S.E. WINGWALL ELEVATION

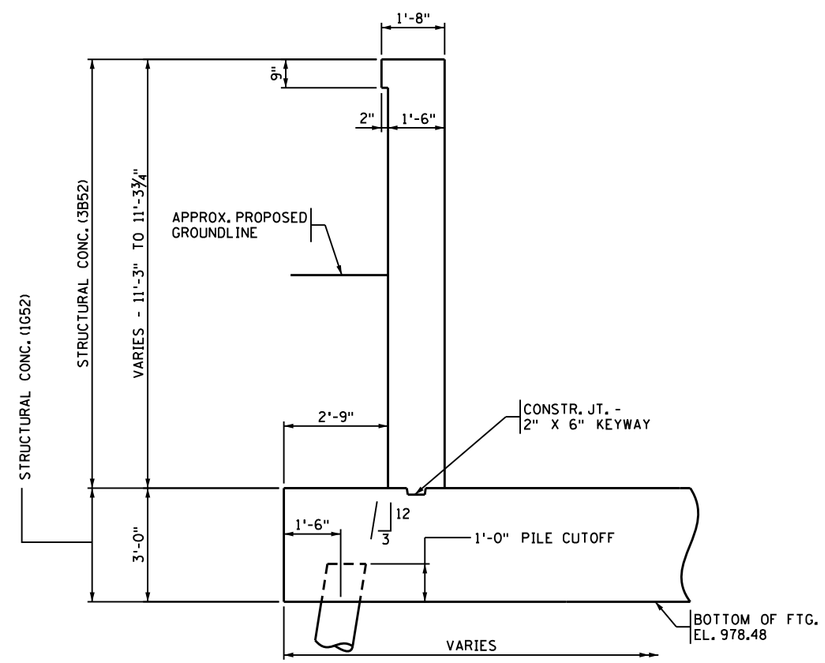

SECTION B-B

Preliminary Design Subject to Change

NO	DATE	BY	CHK	REVISIONS

I HEREBY CERTIFY THAT THIS PLAN WAS PREPARED BY ME OR UNDER MY DIRECT SUPERVISION AND THAT I AM A DULY LICENSED PROFESSIONAL ENGINEER UNDER THE LAWS OF THE STATE OF MINNESOTA.

LICENSED PROFESSIONAL ENGINEER: CARL OSBERG
DATE: 8/12/2016 REG NO: 42732

WSB & Associates, Inc.
701 Xenia Avenue South, Suite 300
Minneapolis, MN 55416
www.wsbeng.com
763-541-4800 - Fax 763-541-1700
INFRASTRUCTURE • ENGINEERING • PLANNING • CONSTRUCTION

BLUE EARTH COUNTY
MINNESOTA PROJ. NO. STP SM
STATE PROJECT NO. 0704-07051

TITLE: SOUTH ABUTMENT DETAILS

DES: JH	DR: DJV	APPROVED:
CHK: CBO	CHK: CBO	

Sheet 6 of 54 Sheets

Bridge No. 07051

7/28/2016 10:35:28 AM
K:\03265-000\Cad\Plan\cbr-0705l_sabut3.dgn

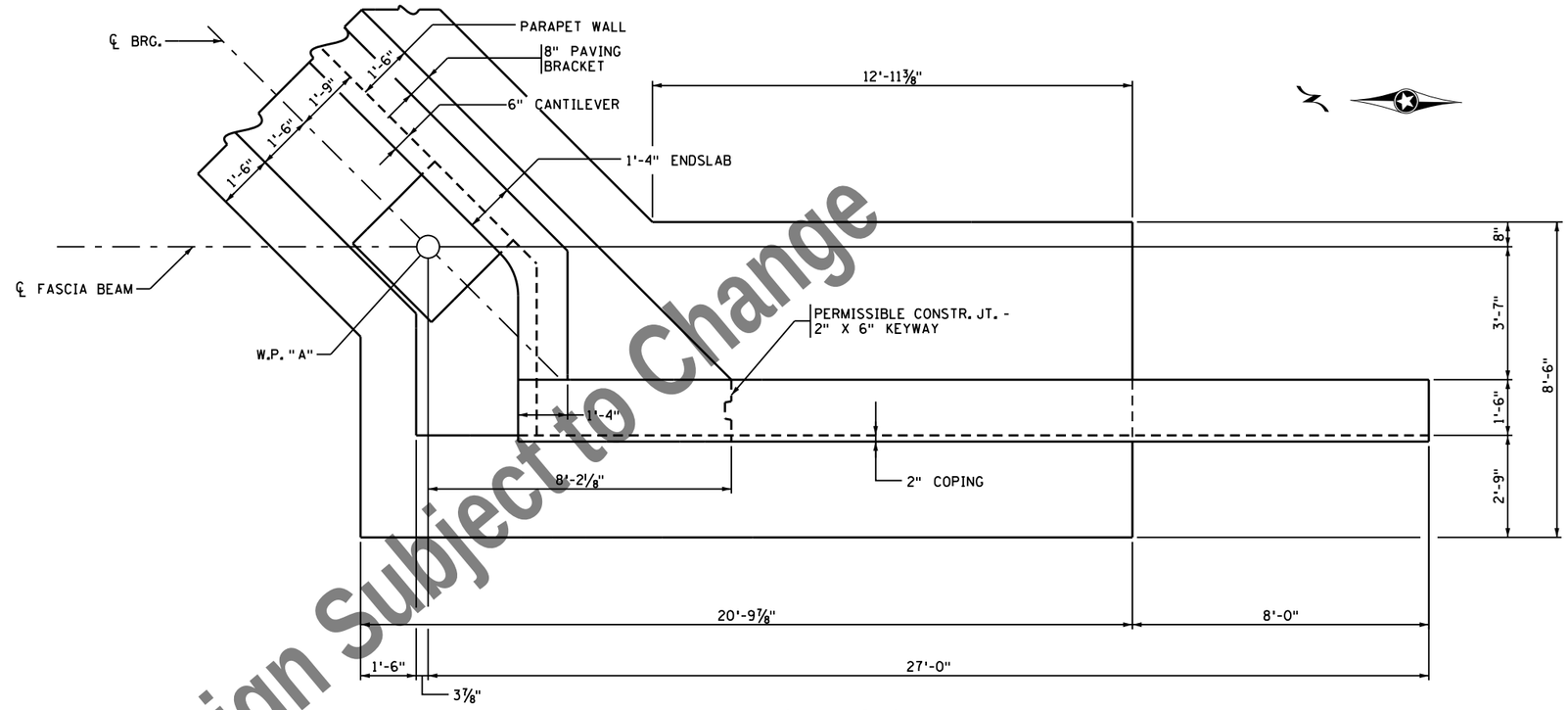

S.W. WINGWALL PLAN

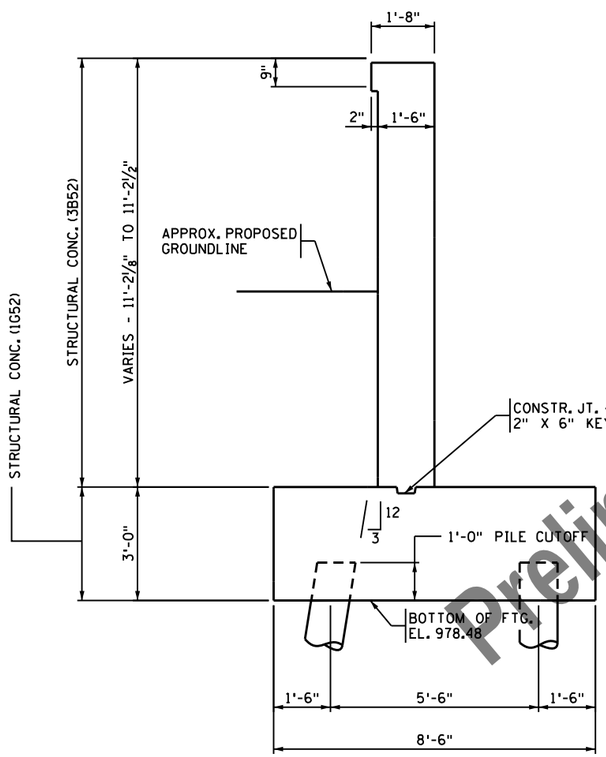

SECTION C-C

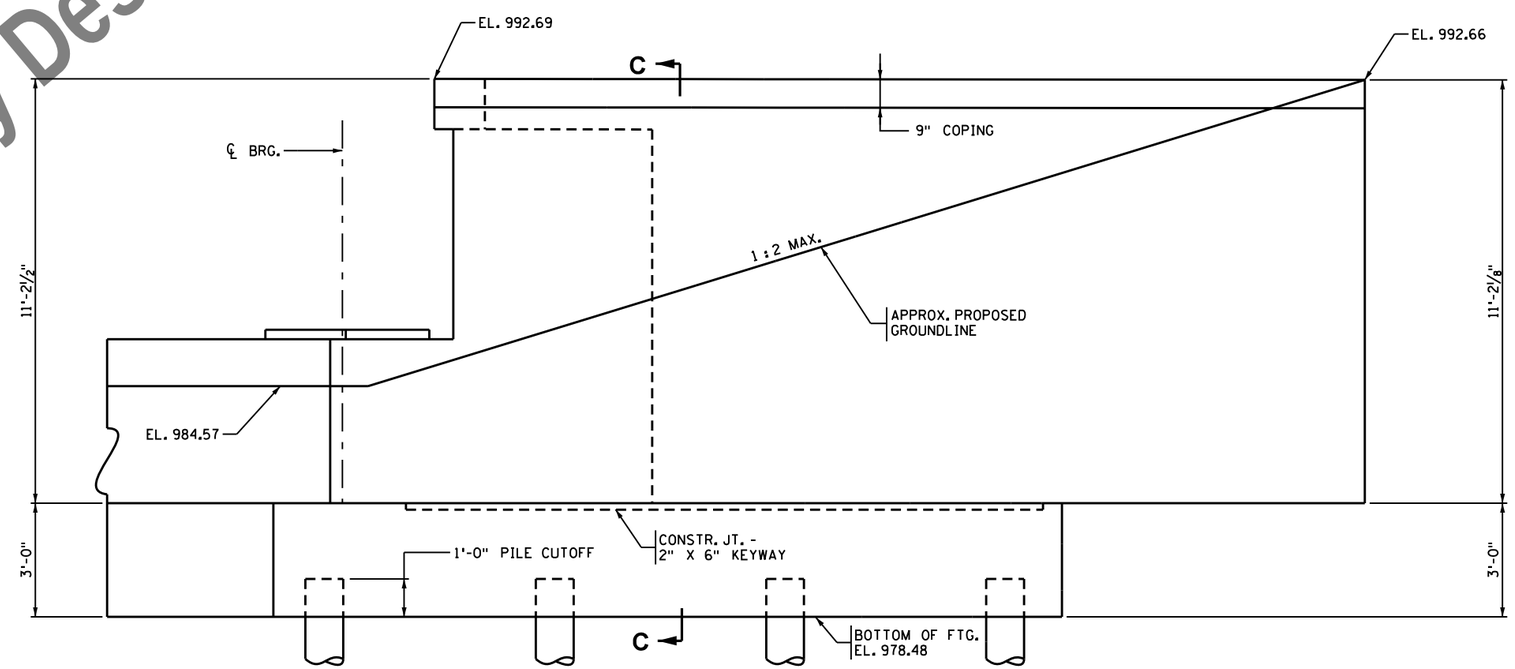

S.W. WINGWALL ELEVATION

Preliminary Design Subject to Change

NO	DATE	BY	CHK	REVISIONS

I HEREBY CERTIFY THAT THIS PLAN WAS PREPARED BY ME OR UNDER MY DIRECT SUPERVISION AND THAT I AM A DULY LICENSED PROFESSIONAL ENGINEER UNDER THE LAWS OF THE STATE OF MINNESOTA.

LICENSED PROFESSIONAL ENGINEER: CARL OSBERG
DATE: 8/12/2016 REG NO: 42732

WSB & Associates, Inc.
701 Xenia Avenue South, Suite 300
Minneapolis, MN 55416
www.wsbeng.com
763-541-4800 - Fax 763-541-1700
INFRASTRUCTURE • ENGINEERING • PLANNING • CONSTRUCTION

BLUE EARTH COUNTY
MINNESOTA PROJ. NO. STP SM
STATE PROJECT NO. 0704-07051

TITLE: SOUTH ABUTMENT DETAILS

DES: JH	DR: DJV	APPROVED:
CHK: CBO	CHK: CBO	
Sheet 7 of 54 Sheets		

Bridge No. 07051

7/28/2016 10:35:28 AM
K:\03265-000\Cad\Plan\cbr07051_sabut4.dgn

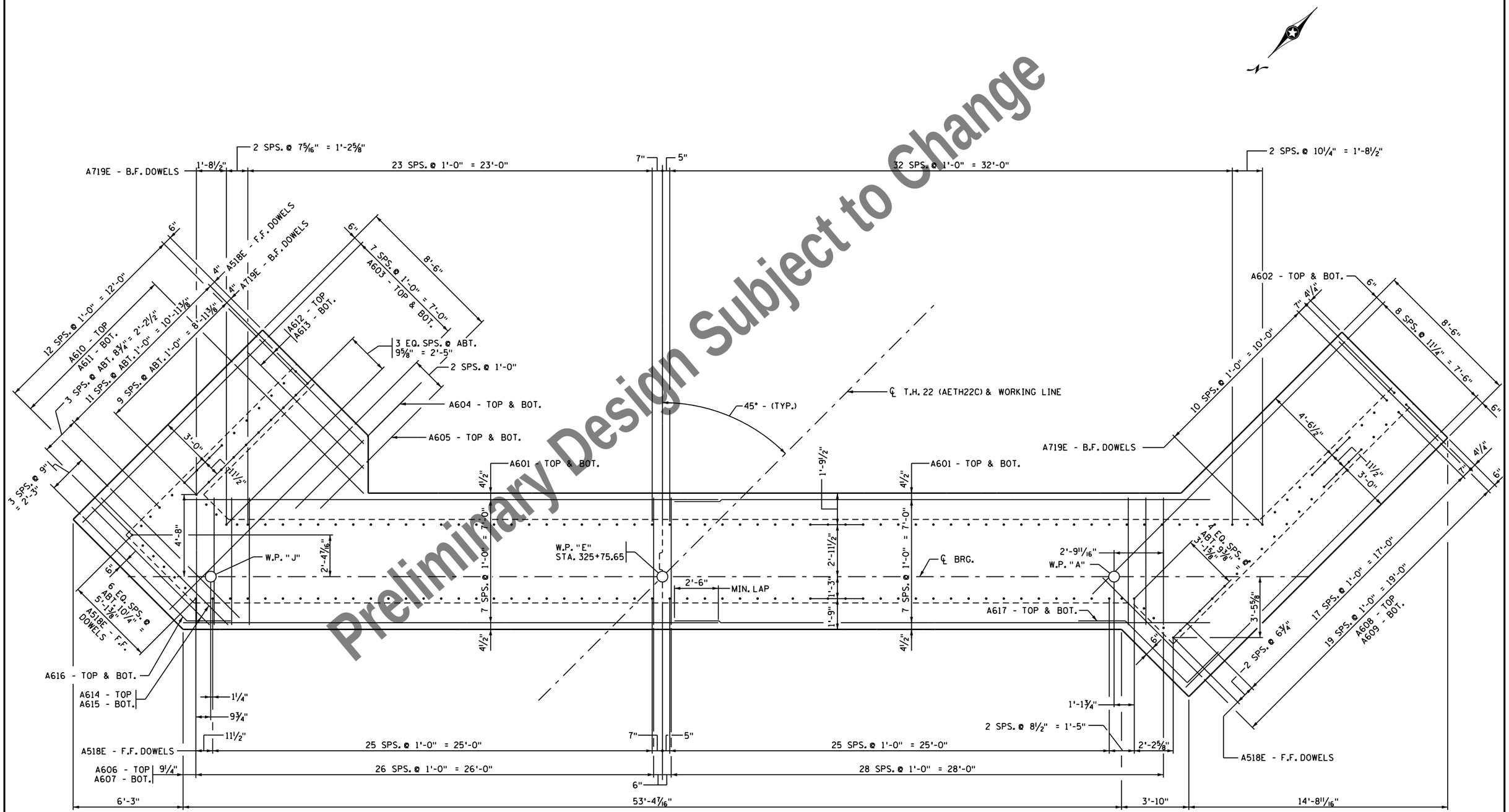

Preliminary Design Subject to Change

FOOTING PLAN - REINFORCEMENT

NO	DATE	BY	CHK	REVISIONS

I HEREBY CERTIFY THAT THIS PLAN WAS PREPARED BY ME OR UNDER MY DIRECT SUPERVISION AND THAT I AM A DULY LICENSED PROFESSIONAL ENGINEER UNDER THE LAWS OF THE STATE OF MINNESOTA.

LICENSED PROFESSIONAL ENGINEER: CARL OSBERG
DATE: 8/12/2016 REG NO: 42732

WSB & Associates, Inc.
701 Xenia Avenue South, Suite 300
Minneapolis, MN 55416
www.wsbeng.com
763-541-4800 - Fax 763-541-1700
INFRASTRUCTURE • ENGINEERING • PLANNING • CONSTRUCTION

BLUE EARTH COUNTY
MINNESOTA PROJ. NO. STP SM
STATE PROJECT NO. 0704-07051

TITLE: SOUTH ABUTMENT REINFORCEMENT

DES: JH	DR: DJV	APPROVED:	Bridge No. 07051
CHK: CBO	CHK: CBO		
Sheet 8 of 54 Sheets			

7/28/2016 10:35:29 AM
K:\03265-000\Cad\Plan\cbr0705i_sabutRi.dgn

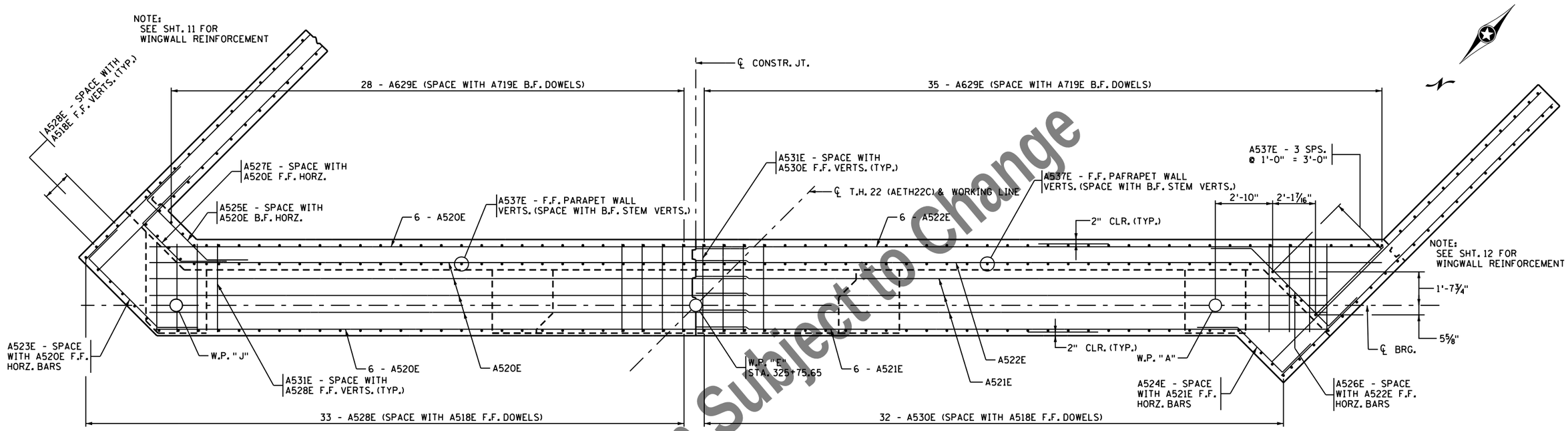

SECTION B-B

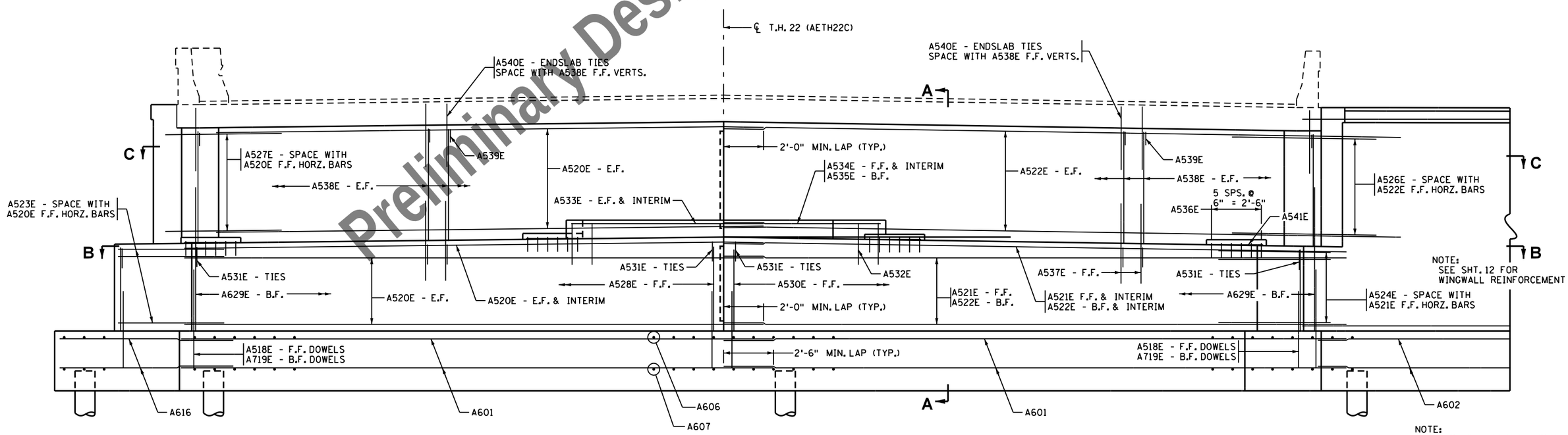

ELEVATION VIEW

NOTE:
SEE SHT. 13 FOR SECTION A-A
SEE SHT. 10 FOR SECTION C-C
SEE SHT. 10 FOR SHEAR BLOCK &
PEDESTAL REINFORCEMENT.

Preliminary Design Subject to Change

NO	DATE	BY	CHK	REVISIONS

I HEREBY CERTIFY THAT THIS PLAN WAS PREPARED BY ME OR UNDER MY DIRECT SUPERVISION AND THAT I AM A DULY LICENSED PROFESSIONAL ENGINEER UNDER THE LAWS OF THE STATE OF MINNESOTA.

LICENSED PROFESSIONAL ENGINEER: CARL OSBERG
DATE: 8/12/2016 REG NO: 42732

WSB & Associates, Inc.
701 Xenia Avenue South, Suite 300
Minneapolis, MN 55416
www.wsbeng.com
763-541-4800 - Fax 763-541-1700
INFRASTRUCTURE • ENGINEERING • PLANNING • CONSTRUCTION

BLUE EARTH COUNTY
MINNESOTA PROJ. NO. STP SM
STATE PROJECT NO. 0704-07051

TITLE: SOUTH ABUTMENT REINFORCEMENT

DES: JH	DR: DJV	APPROVED:
CHK: CBO	CHK: CBO	

Sheet 9 of 54 Sheets

Bridge No. 07051

7/28/2016 10:35:29 AM
K:\03265-000\Cad\Plan\cbr07051_sabutR2.dgn

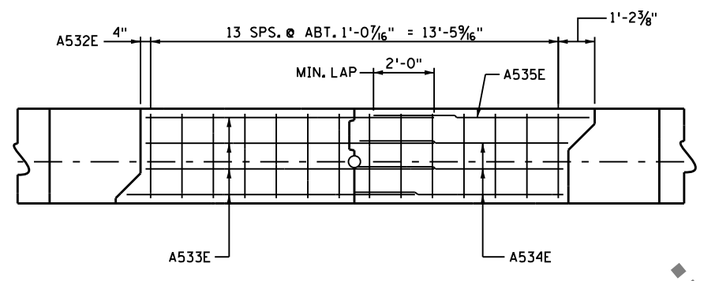

SHEAR BLOCK REINFORCEMENT

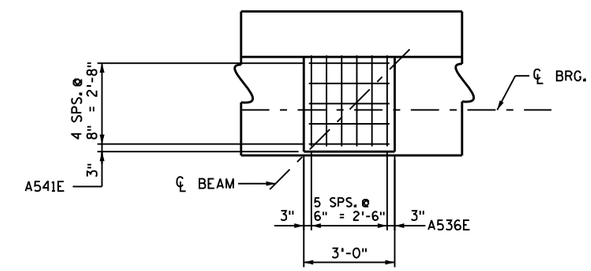

PEDESTAL REINFORCEMENT @ BRIDGE SEAT

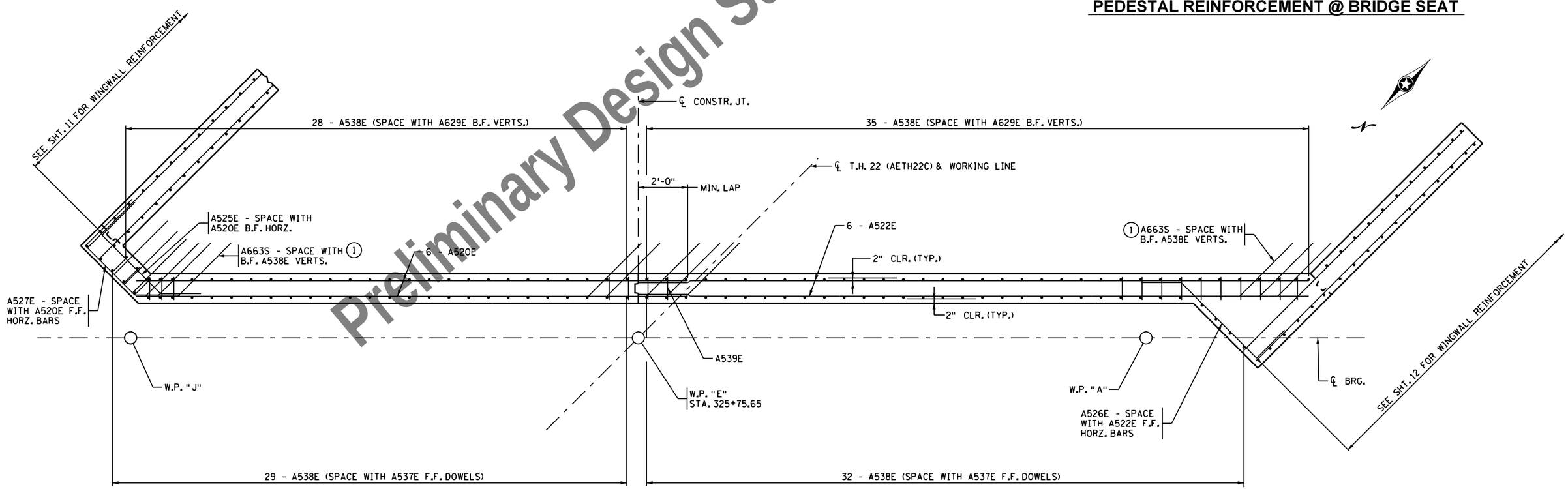

SECTION C-C

(1) PLACE PARALLEL TO T.H. 22

Preliminary Design Subject to Change

NO	DATE	BY	CHK	REVISIONS

I HEREBY CERTIFY THAT THIS PLAN WAS PREPARED BY ME OR UNDER MY DIRECT SUPERVISION AND THAT I AM A DULY LICENSED PROFESSIONAL ENGINEER UNDER THE LAWS OF THE STATE OF MINNESOTA.

LICENSED PROFESSIONAL ENGINEER: CARL OSBERG
DATE: 8/12/2016 REG NO: 42732

WSB & Associates, Inc.
701 Xenia Avenue South, Suite 300
Minneapolis, MN 55416
www.wsbeng.com
763-541-4800 - Fax 763-541-1700
INFRASTRUCTURE • ENGINEERING • PLANNING • CONSTRUCTION

BLUE EARTH COUNTY
MINNESOTA PROJ. NO. STP SM
STATE PROJECT NO. 0704-07051

TITLE: **SOUTH ABUTMENT REINFORCEMENT**

DES: JH	DR: DJV	APPROVED:
CHK: CBO	CHK: CBO	

Sheet 10 of 54 Sheets

Bridge No. 07051

7/28/2016 10:35:30 AM
K:\03265-000\CadPlan\cbr07051_sabutR3.dgn

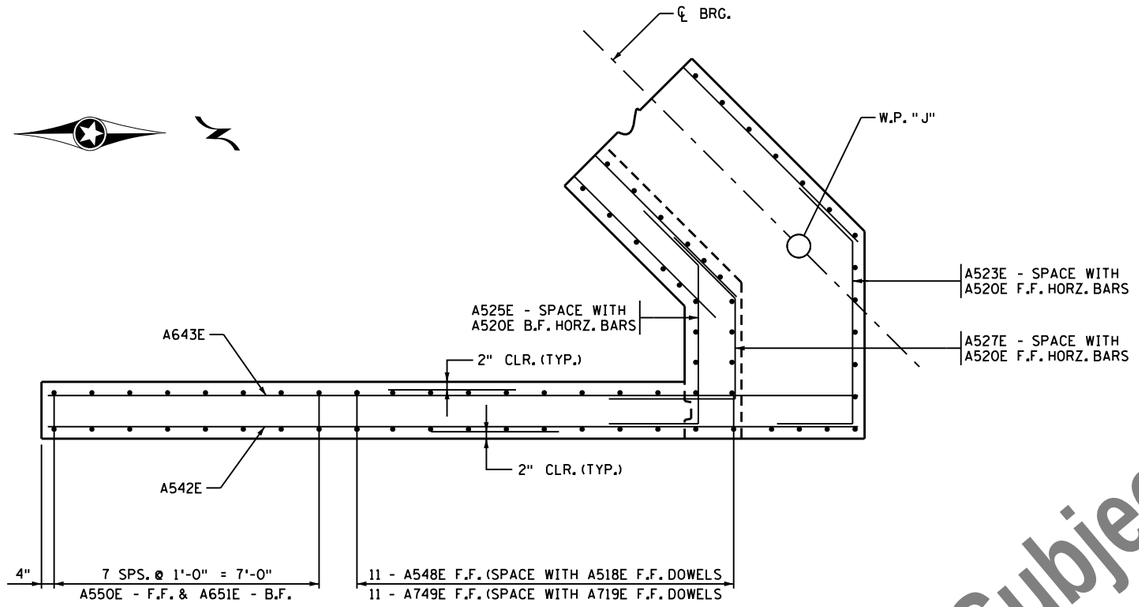

SECTION E-E @ S.E. WINGWALL

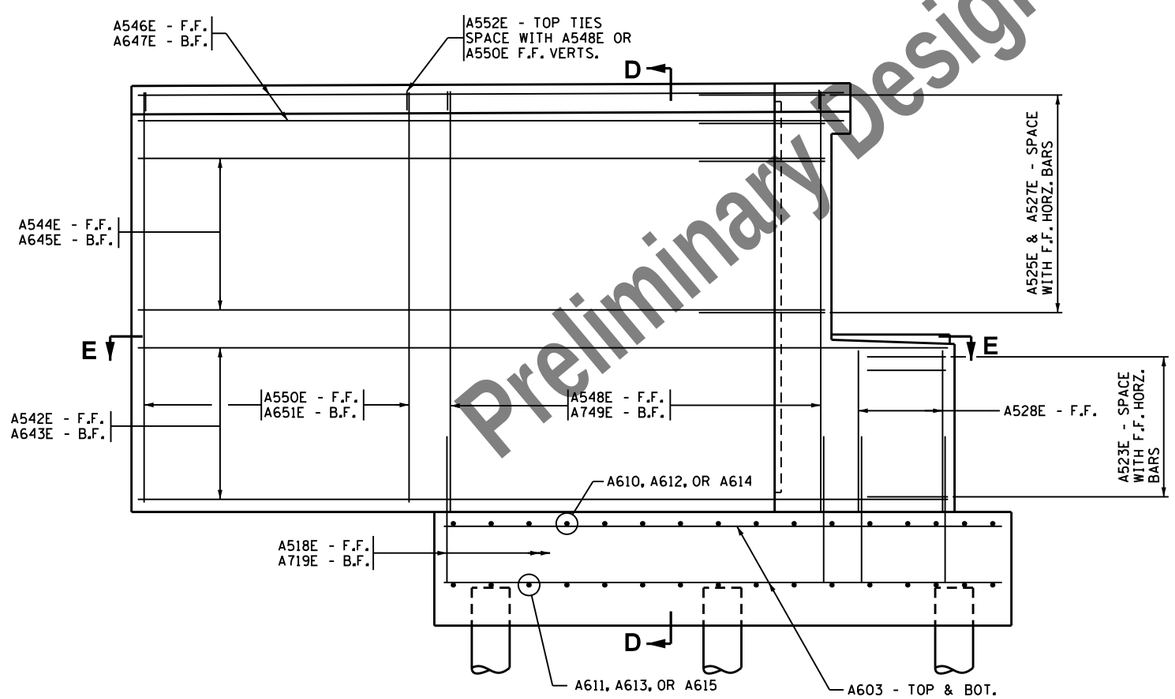

S.E. WINGWALL - ELEVATION VIEW

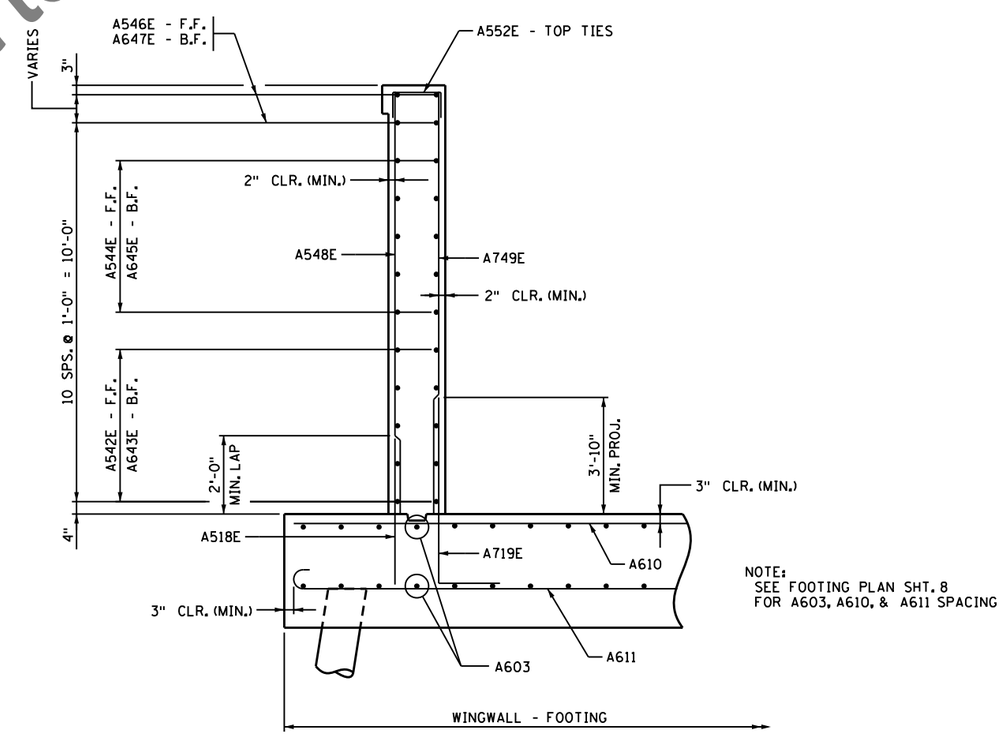

NOTE:
SEE FOOTING PLAN SHT. 8
FOR A603, A610, & A611 SPACING

SECTION D-D

Preliminary Design Subject to Change

NO	DATE	BY	CHK	REVISIONS

I HEREBY CERTIFY THAT THIS PLAN WAS PREPARED BY ME OR UNDER MY DIRECT SUPERVISION AND THAT I AM A DULY LICENSED PROFESSIONAL ENGINEER UNDER THE LAWS OF THE STATE OF MINNESOTA.

LICENSED PROFESSIONAL ENGINEER: CARL OSBERG
DATE: 8/12/2016 REG NO: 42732

WSB & Associates, Inc.
701 Xenia Avenue South, Suite 300
Minneapolis, MN 55416
www.wsbeng.com
763-541-4800 - Fax 763-541-1700
INFRASTRUCTURE • ENGINEERING • PLANNING • CONSTRUCTION

BLUE EARTH COUNTY
MINNESOTA PROJ. NO. STP SM
STATE PROJECT NO. 0704-07051

TITLE: SOUTH ABUTMENT REINFORCEMENT

DES: JH	DR: DJV	APPROVED:
CHK: CBO	CHK: CBO	

Sheet 11 of 54 Sheets

Bridge No. 07051

7/28/2016 10:35:30 AM
K:\03265-000\CadPlan\cbr0705i_sabutR4.dgn

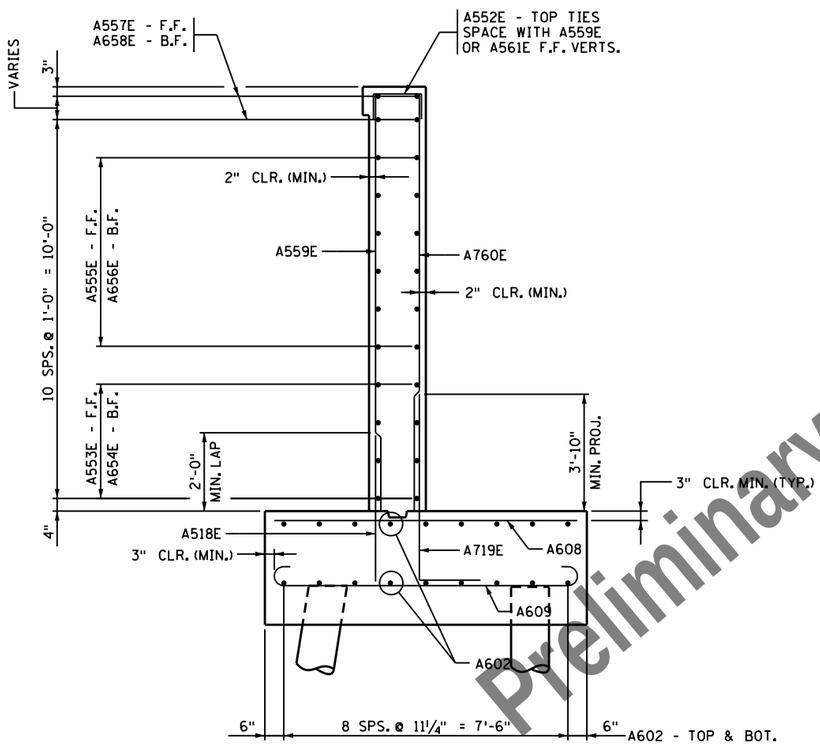

SECTION F-F

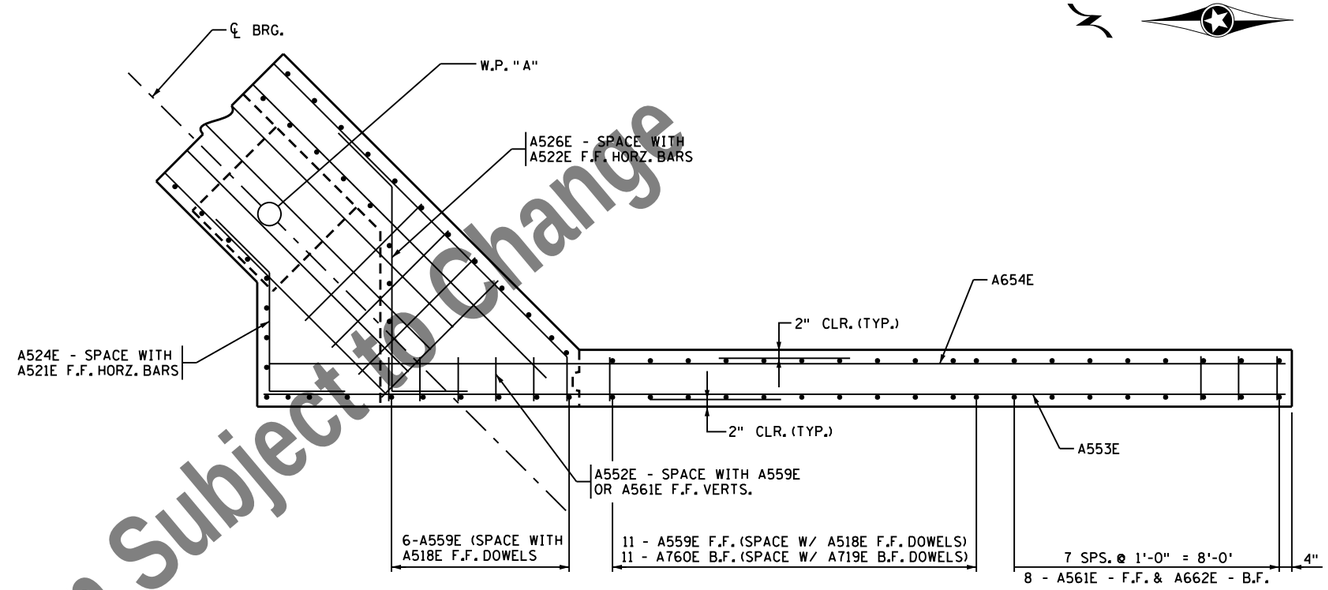

SECTION G-G @ S.W. WINGWALL

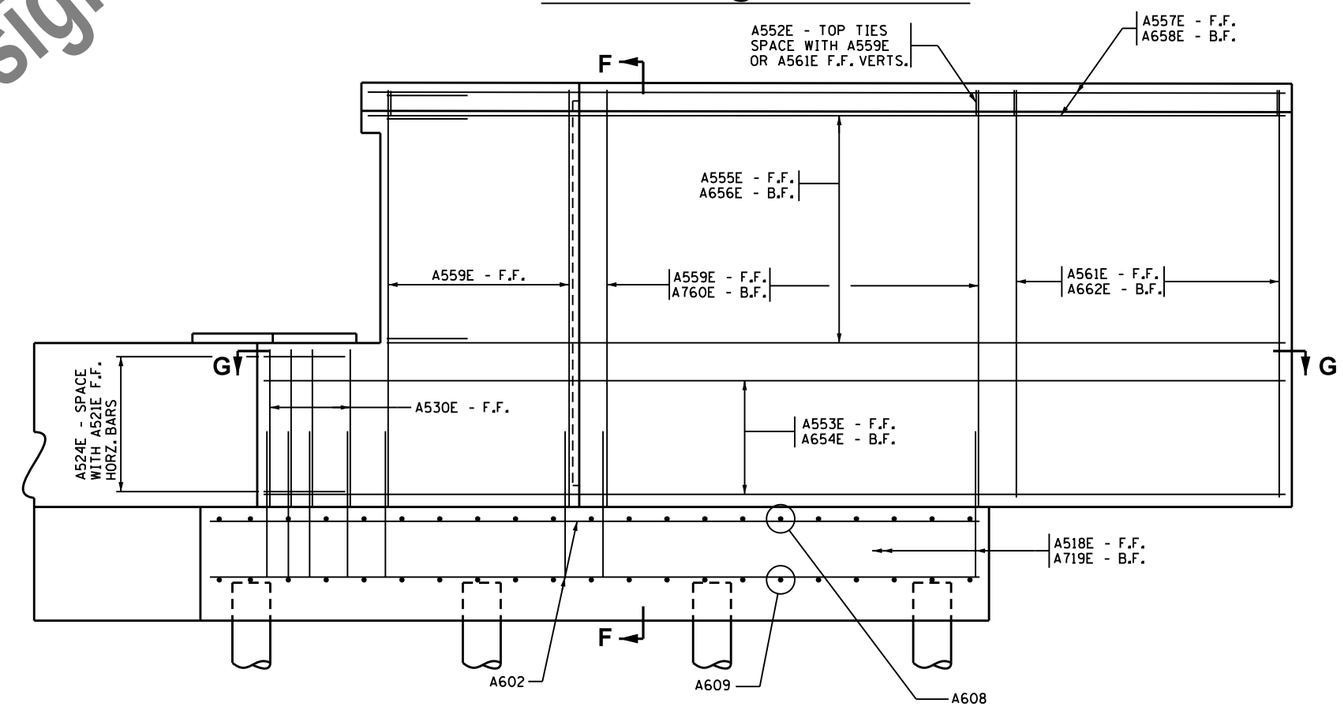

S.W. WINGWALL - ELEVATION VIEW

Preliminary Design Subject to Change

NO	DATE	BY	CHK	REVISIONS

I HEREBY CERTIFY THAT THIS PLAN WAS PREPARED BY ME OR UNDER MY DIRECT SUPERVISION AND THAT I AM A DULY LICENSED PROFESSIONAL ENGINEER UNDER THE LAWS OF THE STATE OF MINNESOTA.

LICENSED PROFESSIONAL ENGINEER: CARL OSBERG
DATE: 8/12/2016 REG NO: 42732

WSB & Associates, Inc.
701 Xenia Avenue South, Suite 300
Minneapolis, MN 55416
www.wsbeng.com
763-541-4800 - Fax 763-541-1700
INFRASTRUCTURE • ENGINEERING • PLANNING • CONSTRUCTION

BLUE EARTH COUNTY
MINNESOTA PROJ. NO. STP SM
STATE PROJECT NO. 0704-07051

TITLE: SOUTH ABUTMENT REINFORCEMENT

DES: JH	DR: DJV	APPROVED:
CHK: CBO	CHK: CBO	

Sheet 12 of 54 Sheets

Bridge No. 07051

7/28/2016 10:35:30 AM
K:\03265-000\CadPlan\cbr07051_sabutR5.dgn

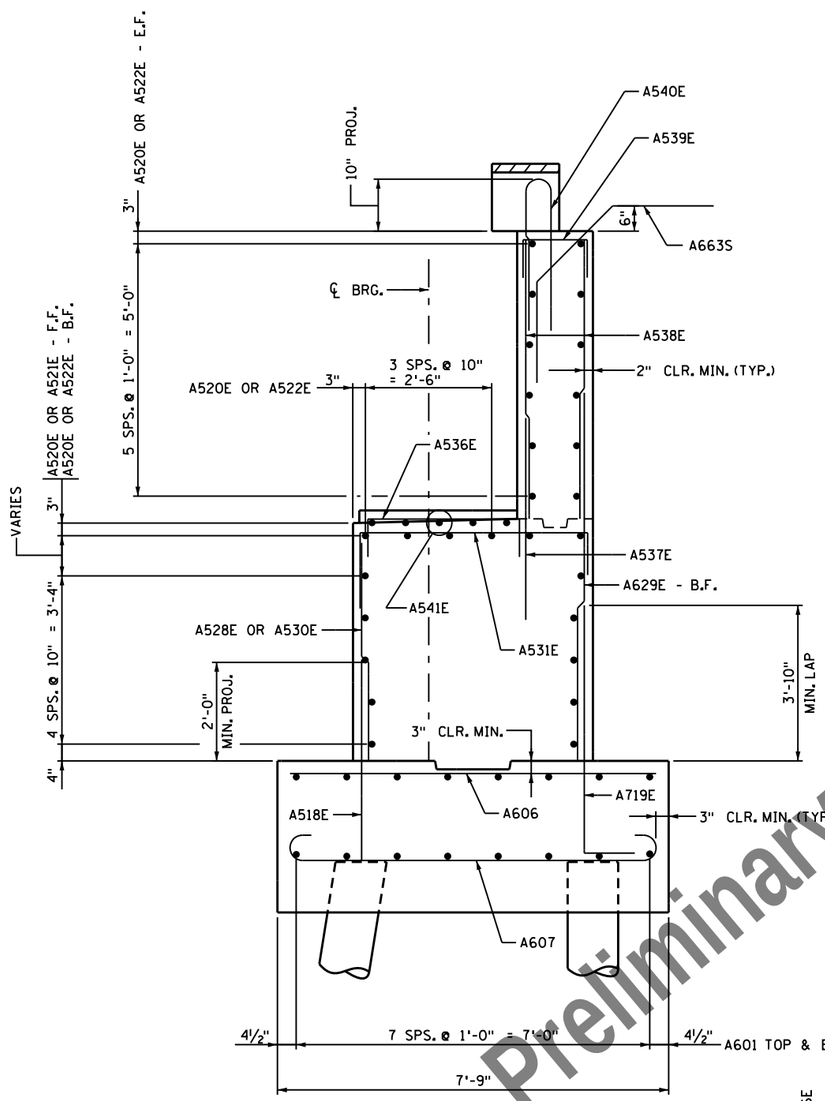

SECTION A-A

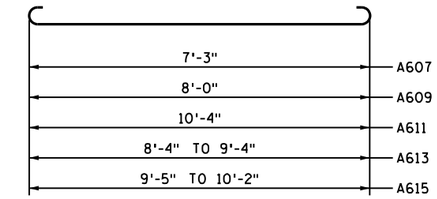

A607, A609, A611, A613, & A615

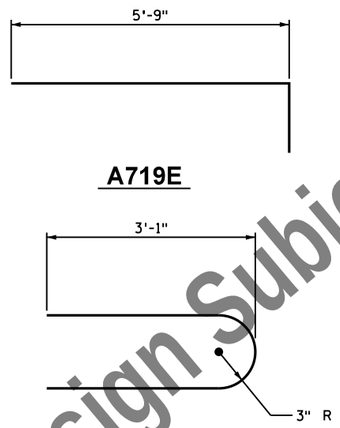

A719E

A540E

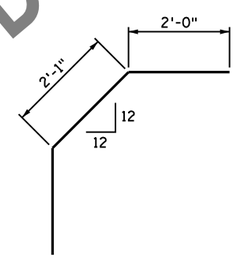

A663S

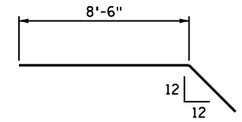

A616

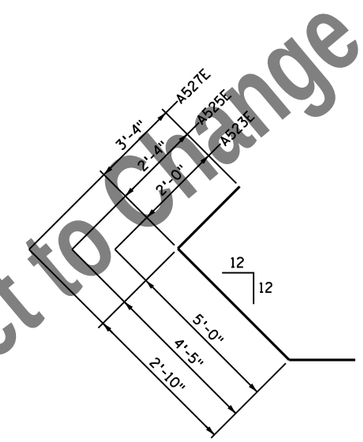

A523E, A525E, & A527E

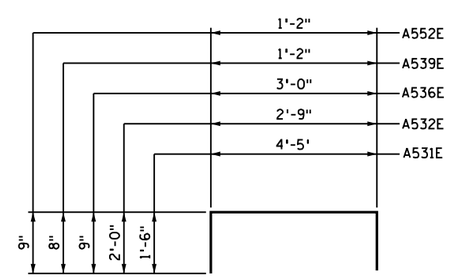

A531E, A532E, A536E, A539E, & A552E

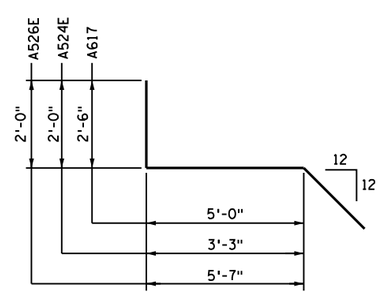

A617, A524E, & A526E

SOUTH ABUTMENT - BILL OF REINFORCEMENT

BAR MARK	NUMBER	LENGTH	SHAPE	LOCATION
A601	32	30'-6"		FTG. - LONGIT TOP & BOT.
A602	18	20'-3'		FTG. - LONGIT TOP & BOT.
A603	16	14'-8"		FTG. - LONGIT TOP & BOT.
A604	2	5'-6"		FTG. - LONGIT TOP & BOT.
A605	2	3'-6"		FTG. - LONGIT TOP & BOT.
A606	56	7'-3"		FTG. - TRANSV. TOP
A607	56	8'-7"		FTG. - TRANSV. BOT.
A608	20	8'-0"		FTG. - TRANSV. TOP
A609	20	9'-4"		FTG. - TRANSV. BOT.
A610	11	10'-4"		FTG. - TRANSV. TOP
A611	11	11'-8"		FTG. - TRANSV. BOT.
A612	2	(A)		FTG. - TRANSV. TOP
A613	2	(B)		FTG. - TRANSV. BOT.
A614	2	(C)		FTG. - TRANSV. TOP
A615	2	(D)		FTG. - TRANSV. BOT.
A616	2	11'-0"		FTG. - TRANSV. TOP & BOT.
A617	2	10'-0"		FTG. - TRANSV. TOP & BOT.
A518E	99	4'-0"		FTG. - DOWELS
A719E	84	6'-9"		FTG. - DOWELS
A520E	28	29'-7"		STEM - HORZ.
A521E	9	31'-2"		STEM - HORZ.
A522E	19	34'-0"		STEM - HORZ.
A523E	6	9'-0"		STEM - HORZ. @ CORNER
A524E	6	7'-3"		STEM - HORZ. @ CORNER
A525E	12	8'-9"		STEM - HORZ.
A526E	6	9'-7"		STEM - HORZ.
A527E	6	8'-2"		PARAPET WALL - HORZ.
A528E	33	4'-2"		STEM - VERTS.
A629E	63	7'-2"		STEM - VERTS.
A530E	32	4'-1"		STEM - VERTS.
A531E	59	6'-7"		STEM - BR. SEAT TIES
A532E	14	6'-9"		STEM - SHEAR LUG TIES
A533E	4	9'-6"		STEM - SHEAR LUG HORZ.
A534E	3	6'-10"		STEM - SHEAR LUG HORZ.
A535E	1	7'-3"		STEM - SHEAR LUG HORZ.
A536E	24	4'-6"		PEDESTAL - TIES
A537E	61	4'-0"		STEM - VERTS.
A538E	124	5'-7"		PARAPET WALL - VERTS.
A539E	63	2'-6"		PARAPET WALL - TOP TIES
A540E	61	6'-6"		PARAPET WALL TO ENDSLAB
A541E	20	2'-8"		PEDESTAL - HORZ.
A542E	5	21'-4"		S.E. WINGWALL - HORZ.
A643E	5	21'-4"		S.E. WINGWALL - HORZ.
A544E	5	18'-1"		S.E. WINGWALL - HORZ.
A645E	5	18'-1"		S.E. WINGWALL - HORZ.
A546E	2	18'-7"		S.E. WINGWALL - HORZ.
A647E	2	18'-7"		S.E. WINGWALL - HORZ.
A548E	11	11'-1"		S.E. WINGWALL - VERTS.
A749E	11	11'-1"		S.E. WINGWALL - VERTS.
A550E	8	10'-10"		S.E. WINGWALL - VERTS.
A651E	8	10'-10"		S.E. WINGWALL - VERTS.
A552E	44	2'-8"		BOTH WINGWALLS - TOP TIES
A553E	4	26'-11"		S.W. WINGWALL - HORZ.
A654E	4	26'-11"		S.W. WINGWALL - HORZ.
A555E	6	23'-8"		S.W. WINGWALL - HORZ.
A656E	6	23'-8"		S.W. WINGWALL - HORZ.
A557E	2	24'-4"		S.W. WINGWALL - HORZ.
A658E	2	24'-4"		S.W. WINGWALL - HORZ.
A559E	17	11'-0"		S.W. WINGWALL - VERT.
A760E	11	11'-0"		S.W. WINGWALL - VERT.
A561E	8	10'-9"		S.W. WINGWALL - VERT.
A662E	8	10'-9"		S.W. WINGWALL - VERT.
(E) A663S	61	6'-1"		PARAPET WALL TO APP. PANEL

(A) 1 SERIES OF 2 BARS (8'-4" TO 9'-4")
(B) 1 SERIES OF 2 BARS (9'-8" TO 10'-8")
(C) 1 SERIES OF 2 BARS (9'-5" TO 10'-2")
(D) 1 SERIES OF 2 BARS (10'-9" TO 11'-6")

(E) STAINLESS STEEL REINFORCEMENT

Preliminary Design Subject to Change

NO	DATE	BY	CHK	REVISIONS

I HEREBY CERTIFY THAT THIS PLAN WAS PREPARED BY ME OR UNDER MY DIRECT SUPERVISION AND THAT I AM A DULY LICENSED PROFESSIONAL ENGINEER UNDER THE LAWS OF THE STATE OF MINNESOTA.

LICENSED PROFESSIONAL ENGINEER: CARL OSBERG
DATE: 8/12/2016 REG NO: 42732

WSB & Associates, Inc.
701 Xenia Avenue South, Suite 300
Minneapolis, MN 55416
www.wsbeng.com
763-541-4800 - Fax 763-541-1700
INFRASTRUCTURE • ENGINEERING • PLANNING • CONSTRUCTION

BLUE EARTH COUNTY
MINNESOTA PROJ. NO. STP SM
STATE PROJECT NO. 0704-07051

TITLE: SOUTH ABUTMENT REINFORCEMENT

DES: JH | DR: DJV | APPROVED:
CHK: CBO | CHK: CBO

Bridge No. 07051

7/28/2016 10:35:31 AM
K:\03265-000\CadPlan\cbr0705i_sabutR6.dgn

NORTH ABUTMENT REQUIRED NOMINAL PILE BEARING RESISTANCE FOR C.I.P. PILES R_n - TONS/PILE

FIELD CONTROL METHOD	Φ dyn	* R_n
MN/DOT PILE FORMULA 2012 (MPF12) $R_n = 20\sqrt{\frac{W \times H}{1000}} \times \log(\frac{10}{S})$	0.50	158.0
PDA	0.65	121.5

* R_n = (FACTORED DESIGN LOAD) / Φ dyn

NORTH ABUTMENT COMPUTED PILE LOAD - TON / PILE

	NORTH ABUT.
FACTORED DEAD LOAD + EARTH PRESSURE	59.1
FACTORED DOWNDRAG	71.5
** FACTORED DEAD LOAD + EARTH PRESSURE + DOWNDRAG	130.6

** BASED ON STRENGTH 1 LOAD COMBINATION, NOT INCLUDING TRANSIENT LOADS. ONLY USED FOR COMPARISON WITH FACTORED STRUCTURAL RESISTANCE. NOT TO BE USED FOR DRIVING.

NORTH ABUTMENT COMPUTED PILE LOAD - TON / PILE

	NORTH ABUT.
FACTORED DEAD LOAD + EARTH PRESSURE	59.1
FACTORED LIVE LOAD	19.9
*** FACTORED DESIGN LOAD	79.0

*** BASED ON STRENGTH 1 LOAD COMBINATION.

PILE NOTES

1 C-I-P CONCRETE TEST PILES 90 FT. LONG
29 C-I-P CONCRETE PILES EST. LENGTH 80 FT.
30 C-I-P CONCRETE PILES REQ'D FOR NORTH ABUTMENT

PILE SPACING SHOWN IS AT BOTTOM OF FOOTING.

PILES MARKED ⊖► THUS TO BE BATTERED 3" PER FOOT IN THE DIRECTION SHOWN.

PILES TO HAVE A NOMINAL DIAMETER OF 12" AND A WALL THICKNESS OF 1/4".

FOR PILE SPLICE DETAILS SEE DETAIL B201.

PILE CUTOFF IS EL. 980.70.

PILES TO BE DRIVEN TO A MINIMUM TIP ELEVATION OF 950.0

SUMMARY OF QUANTITIES - NORTH ABUTMENT

STRUCTURAL CONCRETE (1G52)	79	CU. YD.
STRUCTURAL CONCRETE (3B52)	102	CU. YD.
REINFORCEMENT BARS	4850	POUND
REINFORCEMENT BARS (EPOXY COATED)	9790	POUND
REINFORCEMENT BARS (STAINLESS STEEL)	560	POUND
C-I-P CONCRETE TEST PILE 90 FT. LONG 12"	1	EACH
C-I-P CONCRETE PILING 12"	2320	LIN. FT.
(1) PILE REDRIVING	1	EACH
MEMBRANE WATERPROOFING SYSTEM	71	LIN. FT.
STRUCTURE EXCAVATION	1	LUMP SUM
RANDOM RIPRAP CLASS II	103	CU. YD.
RANDOM RIPRAP CLASS III	397	CU. YD.
GEOTEXTILE FILTER TYPE VII	964	SQ. YD.

(1) TO BE INCLUDED IN PRICE BID OTHER ITEMS

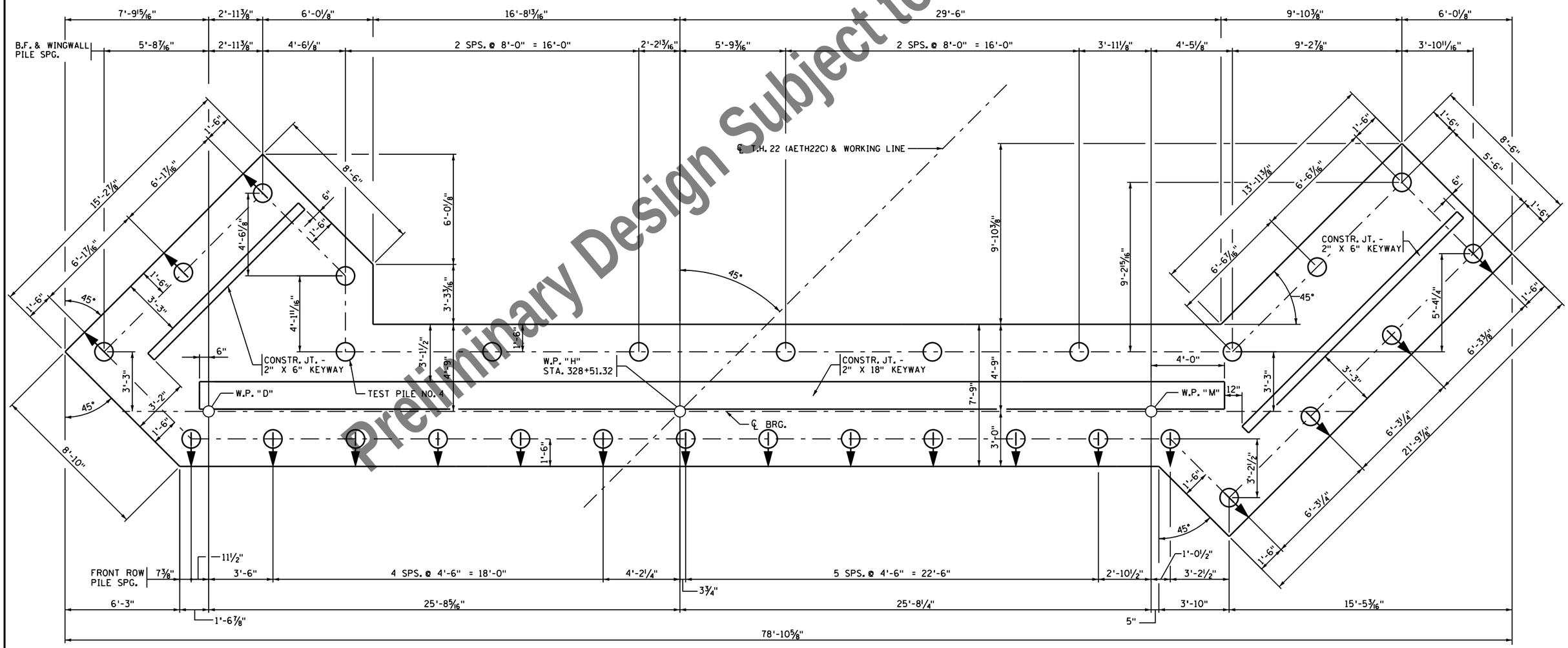

FOOTING - PLAN VIEW

Preliminary Design Subject to Change

NO	DATE	BY	CHK	REVISIONS

I HEREBY CERTIFY THAT THIS PLAN WAS PREPARED BY ME OR UNDER MY DIRECT SUPERVISION AND THAT I AM A DULY LICENSED PROFESSIONAL ENGINEER UNDER THE LAWS OF THE STATE OF MINNESOTA.

LICENSED PROFESSIONAL ENGINEER: CARL OSBERG
DATE: 8/12/2016 REG NO: 42732

WSB & Associates, Inc.
701 Xenia Avenue South, Suite 300
Minneapolis, MN 55416
www.wsbeng.com
763-541-4800 - Fax 763-541-1700
INFRASTRUCTURE • ENGINEERING • PLANNING • CONSTRUCTION

BLUE EARTH COUNTY
MINNESOTA PROJ. NO. STP SM
STATE PROJECT NO. 0704-07051

TITLE: NORTH ABUTMENT DETAILS

DES: JH	DR: DJV	APPROVED:
CHK: CBO	CHK: CBO	

Sheet 14 of 54 Sheets

Bridge No. 07051

7/28/2016 10:35:31 AM
K:\053265-000\Cad\Plan\cbr0705l_nabut1.dgn

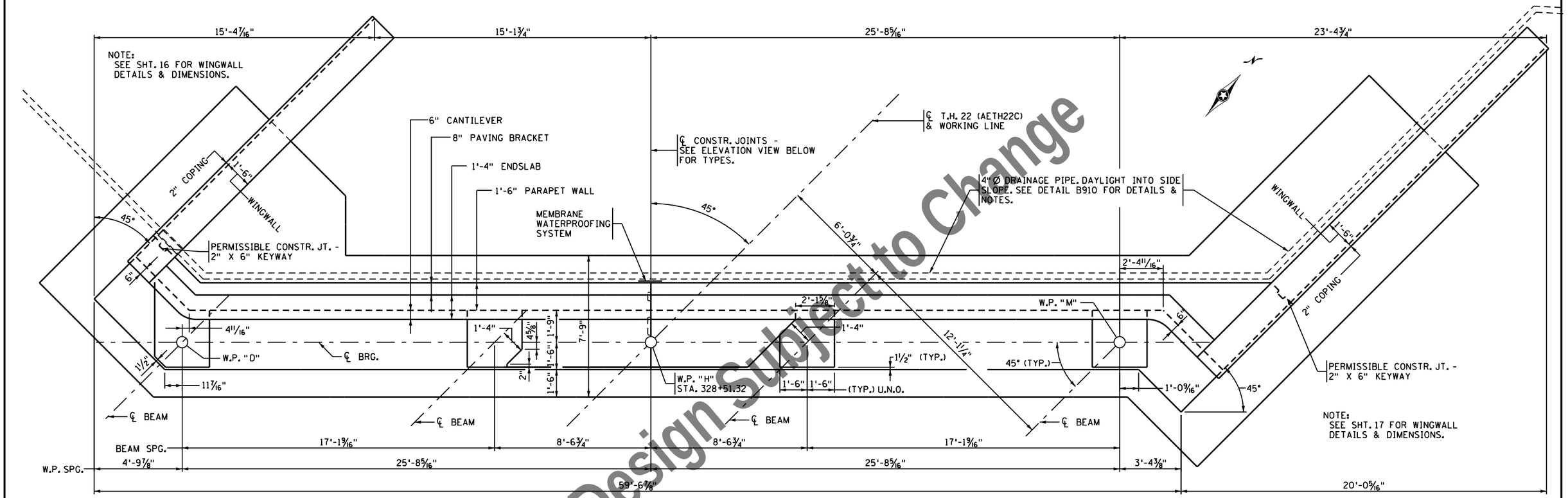

PLAN VIEW

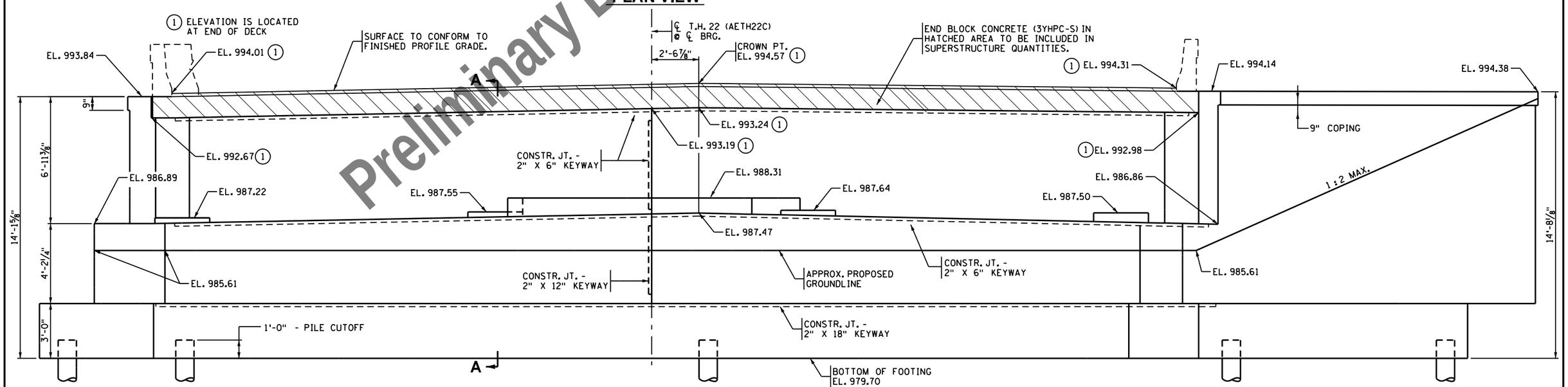

ELEVATION VIEW

NOTE:
SEE SHEET 16 FOR SECTION A-A

Preliminary Design Subject to Change

NO	DATE	BY	CHK	REVISIONS

I HEREBY CERTIFY THAT THIS PLAN WAS PREPARED BY ME OR UNDER MY DIRECT SUPERVISION AND THAT I AM A DULY LICENSED PROFESSIONAL ENGINEER UNDER THE LAWS OF THE STATE OF MINNESOTA.

LICENSED PROFESSIONAL ENGINEER: CARL OSBERG
DATE: 8/12/2016 REG NO: 42732

WSB & Associates, Inc.
701 Xenia Avenue South, Suite 300
Minneapolis, MN 55416
www.wsbeng.com
763-541-4800 - Fax 763-541-1700
INFRASTRUCTURE • ENGINEERING • PLANNING • CONSTRUCTION

BLUE EARTH COUNTY
MINNESOTA PROJ. NO. STP SM
STATE PROJECT NO. 0704-07051

TITLE: **NORTH ABUTMENT DETAILS**

DES: JH	DR: DJV	APPROVED:
CHK: CBO	CHK: CBO	

Sheet 15 of 54 Sheets

Bridge No. 07051

7/28/2016 10:35:32 AM
K:\03265-000\CadPlan\cbr0705l_nabut2.dgn

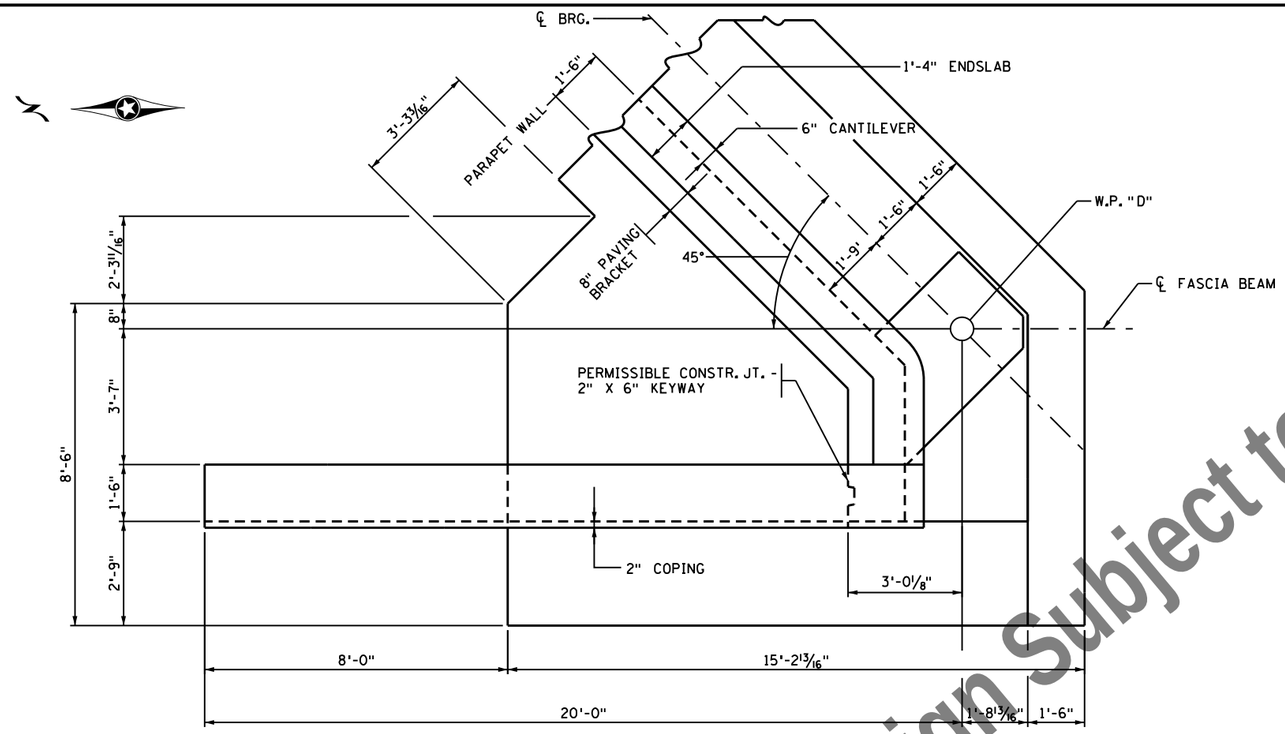

N.W. WINGWALL PLAN

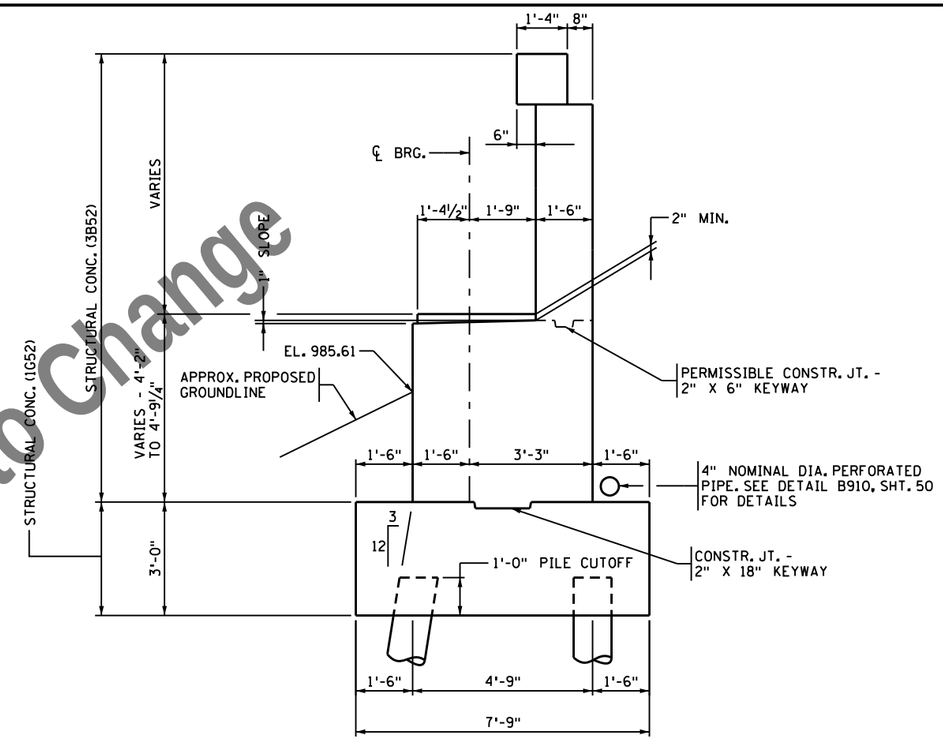

SECTION A-A

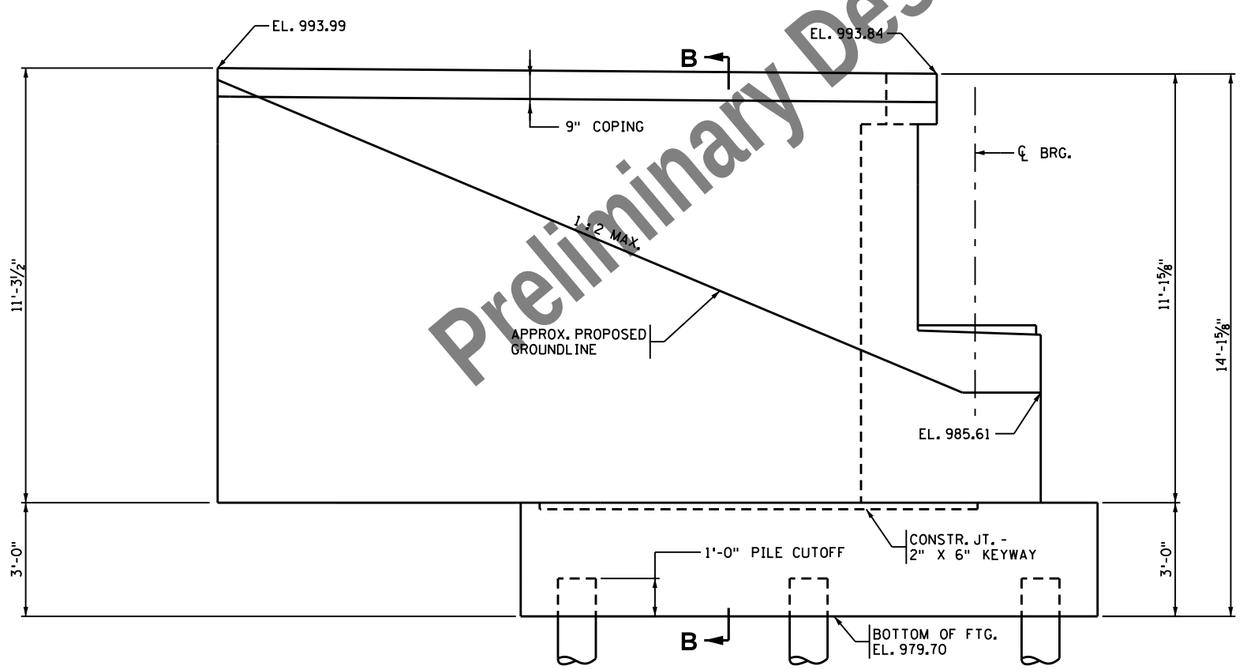

N.W. WINGWALL ELEVATION

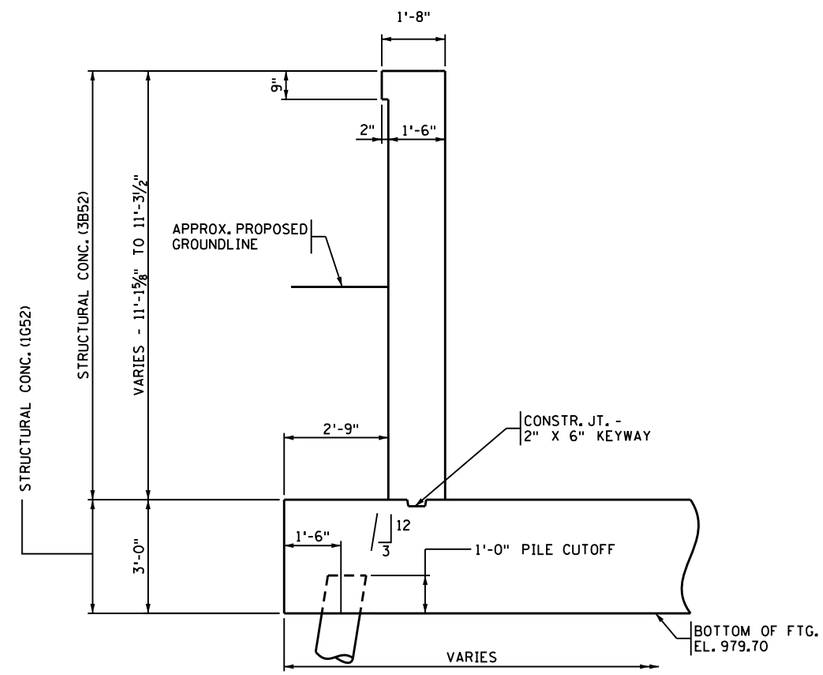

SECTION B-B

Preliminary Design Subject to Change

NO	DATE	BY	CHK	REVISIONS

I HEREBY CERTIFY THAT THIS PLAN WAS PREPARED BY ME OR UNDER MY DIRECT SUPERVISION AND THAT I AM A DULY LICENSED PROFESSIONAL ENGINEER UNDER THE LAWS OF THE STATE OF MINNESOTA.

LICENSED PROFESSIONAL ENGINEER: CARL OSBERG
DATE: 8/12/2016 REG NO: 42732

WSB & Associates, Inc.
701 Xenia Avenue South, Suite 300
Minneapolis, MN 55416
www.wsbeng.com
763-541-4800 - Fax 763-541-1700
INFRASTRUCTURE • ENGINEERING • PLANNING • CONSTRUCTION

BLUE EARTH COUNTY
MINNESOTA PROJ. NO. STP SM
STATE PROJECT NO. 0704-07051

TITLE: NORTH ABUTMENT DETAILS

DES: JH	DR: DJV	APPROVED:
CHK: CBO	CHK: CBO	

Sheet 16 of 54 Sheets

Bridge No. 07051

7/28/2016 10:35:32 AM
K:\03265-000\Cad\Plan\cbr-0705l_nabut3.dgn

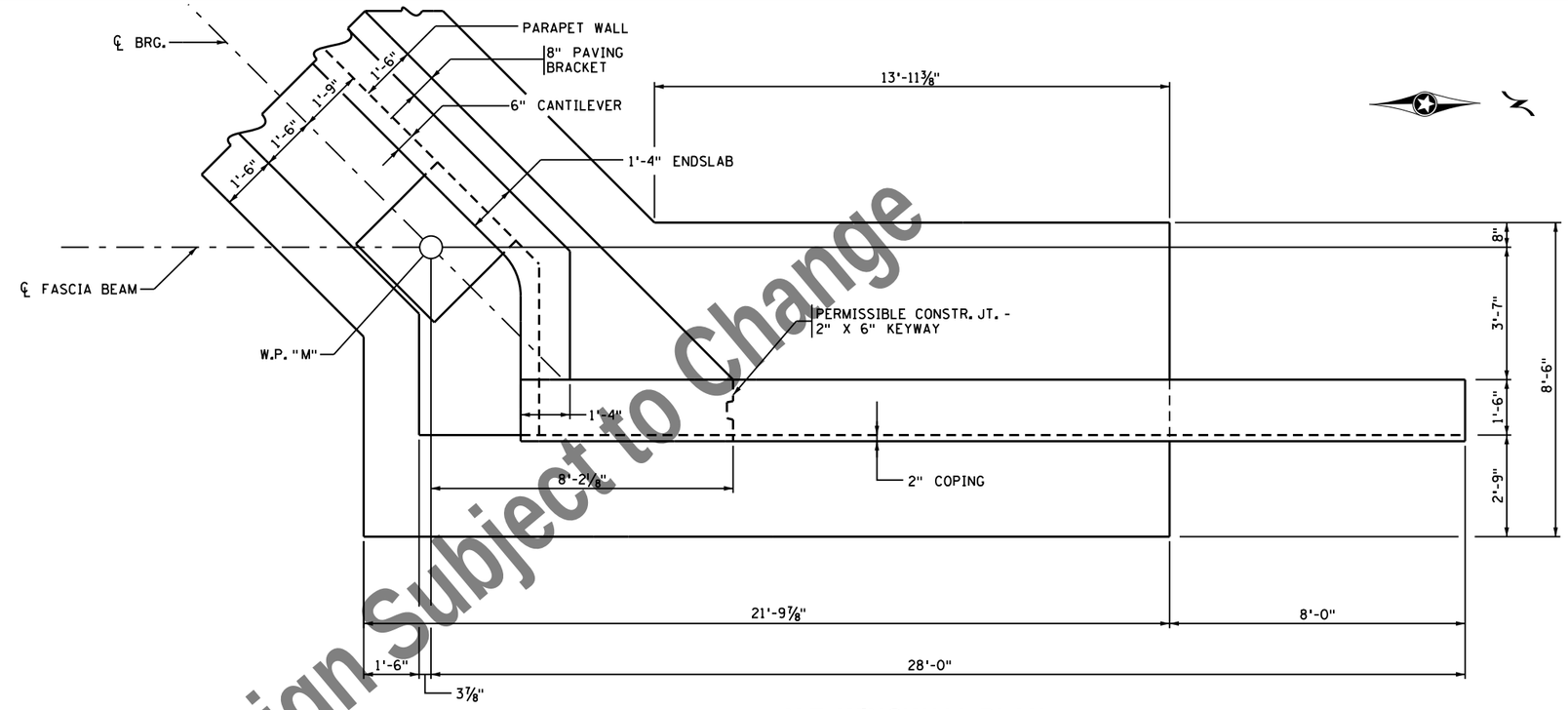

N.E. WINGWALL PLAN

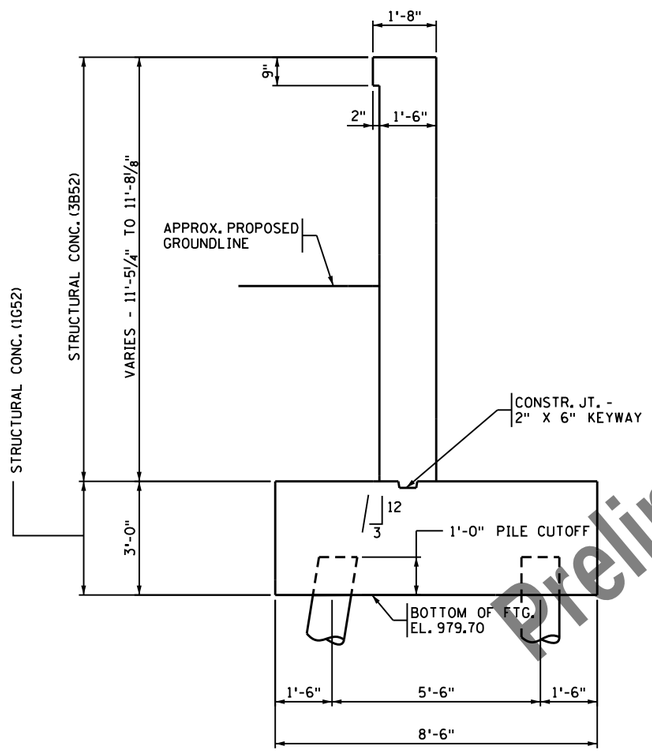

SECTION C-C

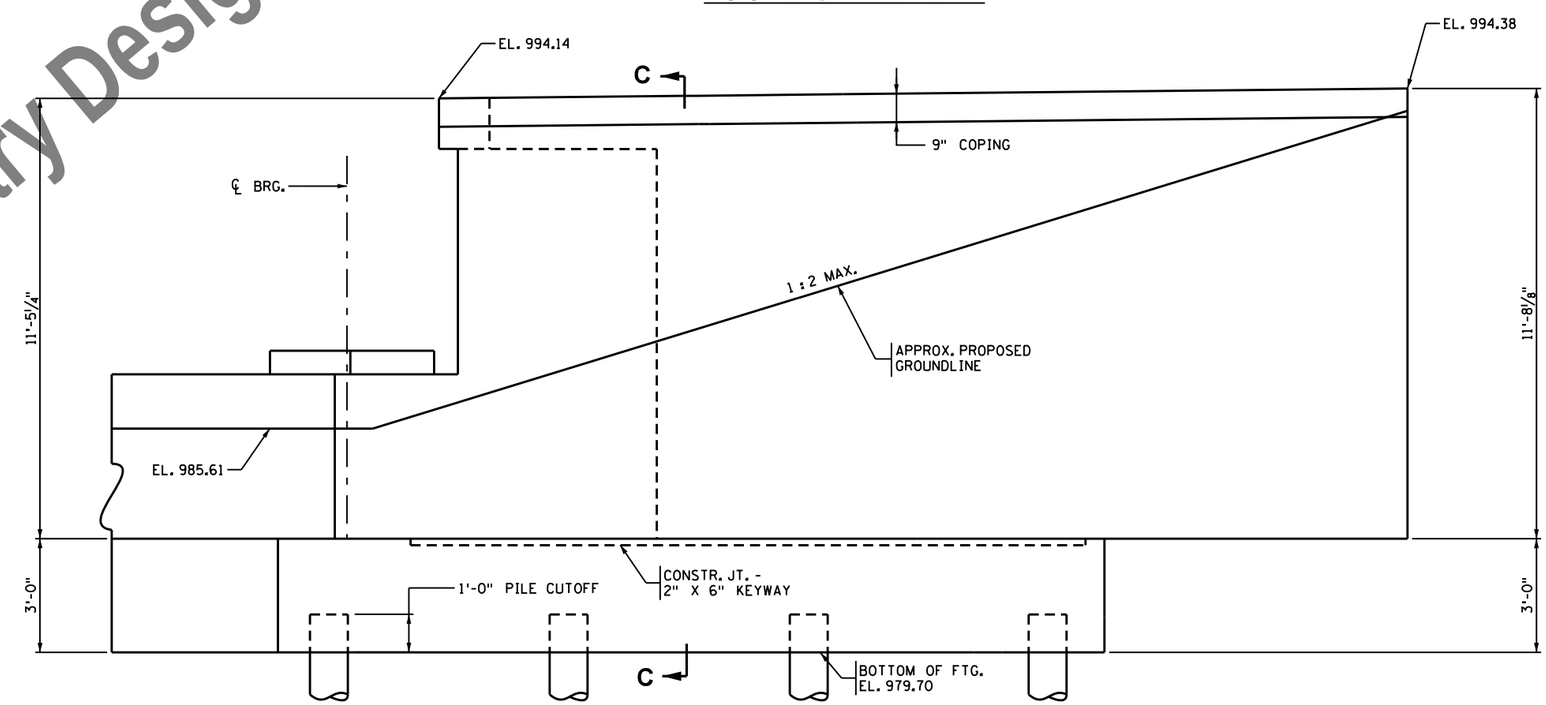

N.E. WINGWALL ELEVATION

Preliminary Design Subject to Change

NO	DATE	BY	CHK	REVISIONS

I HEREBY CERTIFY THAT THIS PLAN WAS PREPARED BY ME OR UNDER MY DIRECT SUPERVISION AND THAT I AM A DULY LICENSED PROFESSIONAL ENGINEER UNDER THE LAWS OF THE STATE OF MINNESOTA.

LICENSED PROFESSIONAL ENGINEER: CARL OSBERG
DATE: 8/12/2016 REG NO: 42732

WSB & Associates, Inc.
701 Xenia Avenue South, Suite 300
Minneapolis, MN 55416
www.wsbeng.com
763-541-4800 - Fax 763-541-1700
INFRASTRUCTURE • ENGINEERING • PLANNING • CONSTRUCTION

BLUE EARTH COUNTY
MINNESOTA PROJ. NO. STP SM
STATE PROJECT NO. 0704-07051

TITLE: **NORTH ABUTMENT DETAILS**

DES: JH	DR: DJV	APPROVED:
CHK: CBO	CHK: CBO	

Sheet 17 of 54 Sheets

Bridge No. 07051

7/28/2016 10:35:33 AM
K:\03265-000\CadPlan\cbr07051_nabut4.dgn

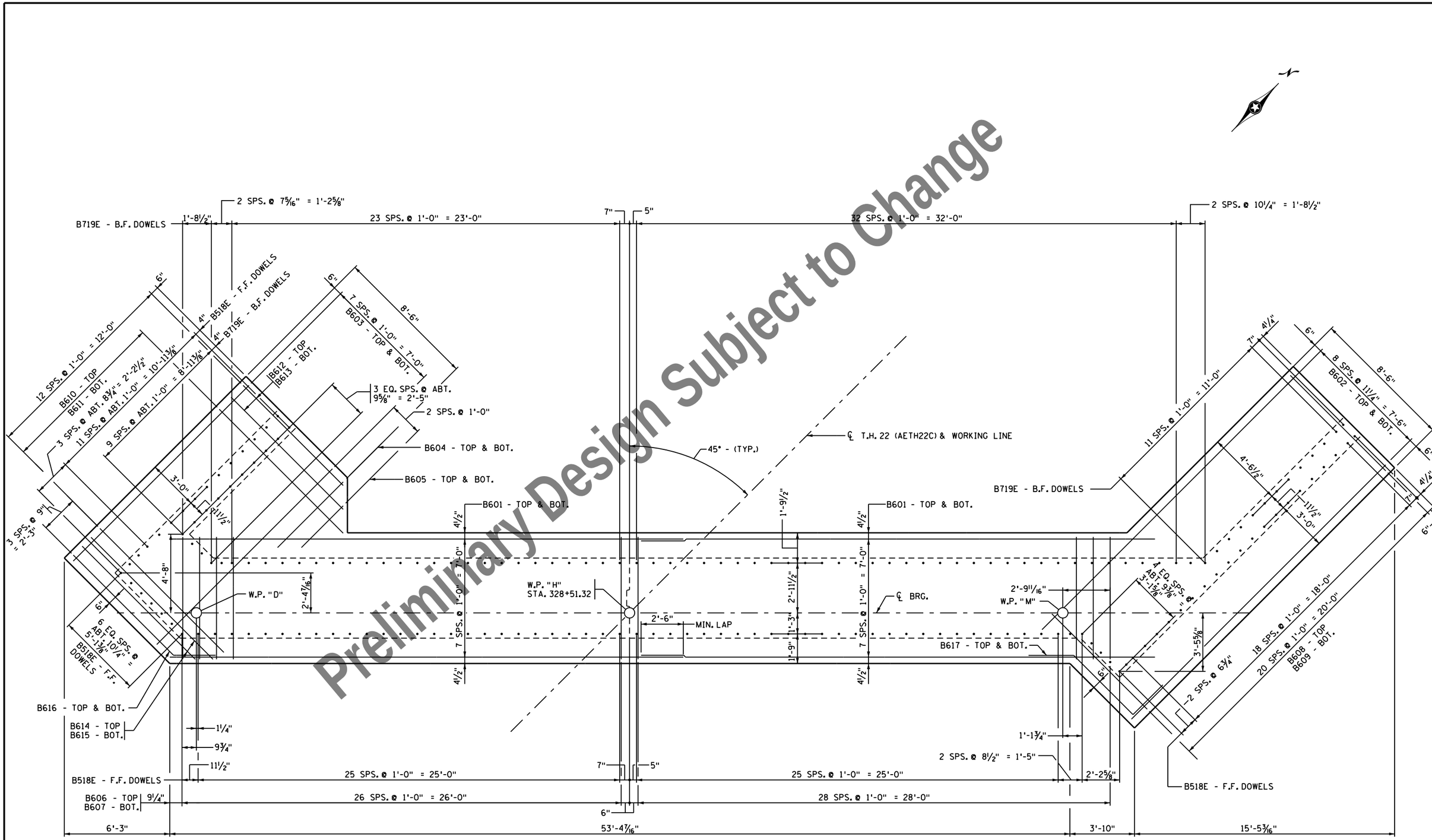

FOOTING PLAN - REINFORCEMENT

NO	DATE	BY	CHK	REVISIONS

I HEREBY CERTIFY THAT THIS PLAN WAS PREPARED BY ME OR UNDER MY DIRECT SUPERVISION AND THAT I AM A DULY LICENSED PROFESSIONAL ENGINEER UNDER THE LAWS OF THE STATE OF MINNESOTA.

LICENSED PROFESSIONAL ENGINEER: CARL OSBERG
DATE: 8/12/2016 REG NO: 42732

WSB & Associates, Inc.
701 Xenia Avenue South, Suite 300
Minneapolis, MN 55416
www.wsbeng.com
763-541-4800 - Fax 763-541-1700
INFRASTRUCTURE • ENGINEERING • PLANNING • CONSTRUCTION

BLUE EARTH COUNTY
MINNESOTA PROJ. NO. STP SM
STATE PROJECT NO. 0704-07051

TITLE: NORTH ABUTMENT REINFORCEMENT

DES: JH	DR: DJV	APPROVED:
CHK: CBO	CHK: CBO	

Sheet 18 of 54 Sheets

Bridge No. 07051

7/28/2016 10:35:33 AM
K:\03265-000\Cad\Plan\cbr0705l_nabutRl.dgn

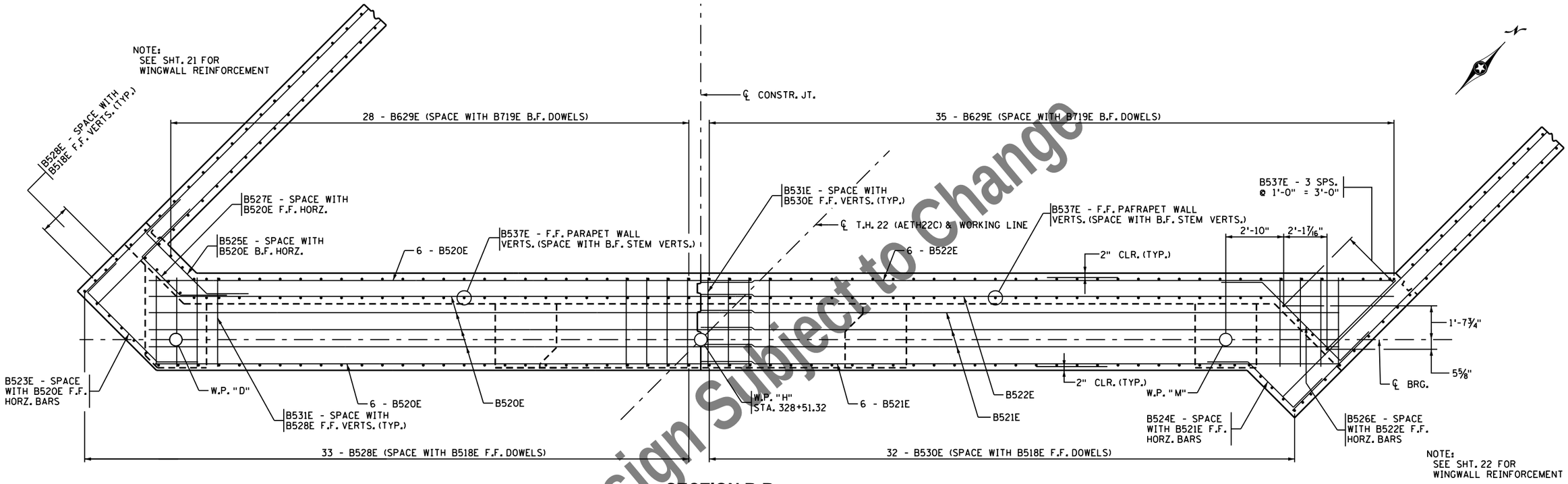

SECTION B-B

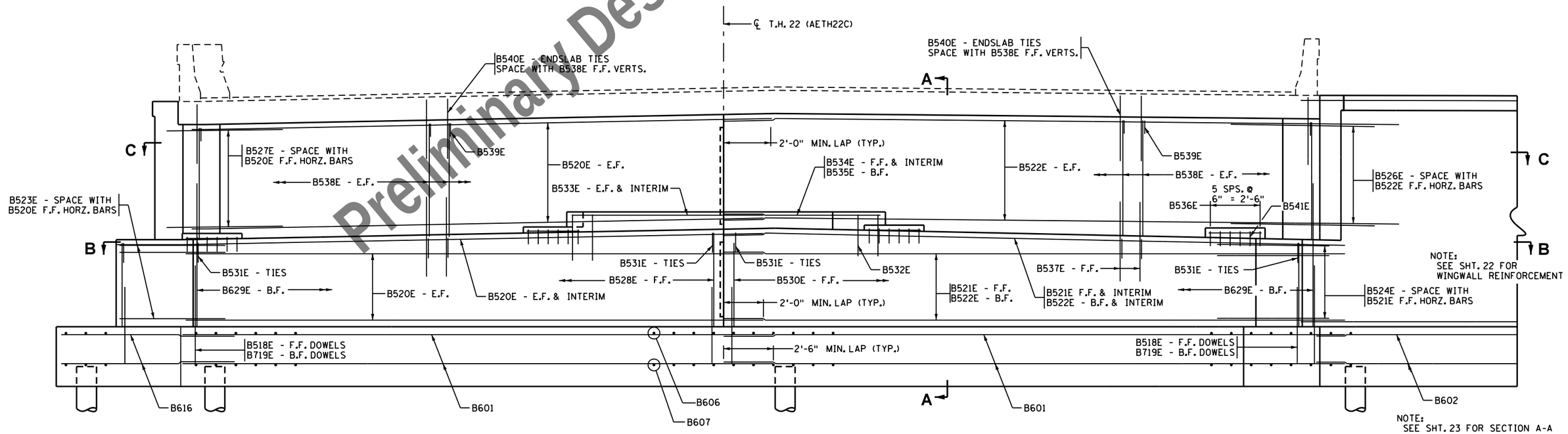

ELEVATION VIEW

Preliminary Design Subject to Change

NO	DATE	BY	CHK	REVISIONS

I HEREBY CERTIFY THAT THIS PLAN WAS PREPARED BY ME OR UNDER MY DIRECT SUPERVISION AND THAT I AM A DULY LICENSED PROFESSIONAL ENGINEER UNDER THE LAWS OF THE STATE OF MINNESOTA.

LICENSED PROFESSIONAL ENGINEER: CARL OSBERG
DATE: 8/12/2016 REG NO: 42732

WSB & Associates, Inc.
701 Xenia Avenue South, Suite 300
Minneapolis, MN 55416
www.wsbeng.com
763-541-4800 • Fax 763-541-1700
INFRASTRUCTURE • ENGINEERING • PLANNING • CONSTRUCTION

BLUE EARTH COUNTY
MINNESOTA PROJ. NO. STP SM
STATE PROJECT NO. 0704-07051

TITLE: **NORTH ABUTMENT REINFORCEMENT**

DES: JH	DR: DJV	APPROVED:
CHK: CBO	CHK: CBO	

Bridge No. 07051

7/28/2016 10:35:33 AM
K:\03265-000\Cad\Plan\cbr-0705l_nabutR2.dgn

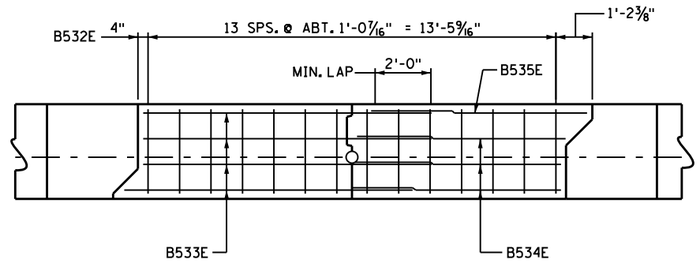

SHEAR BLOCK REINFORCEMENT

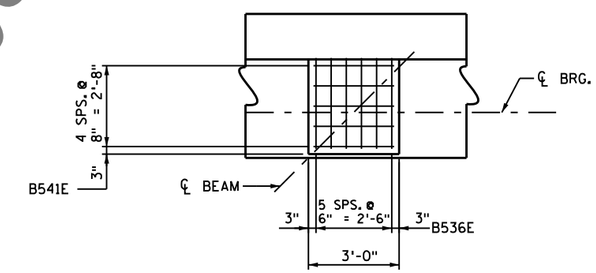

PEDESTAL REINFORCEMENT @ BRIDGE SEAT

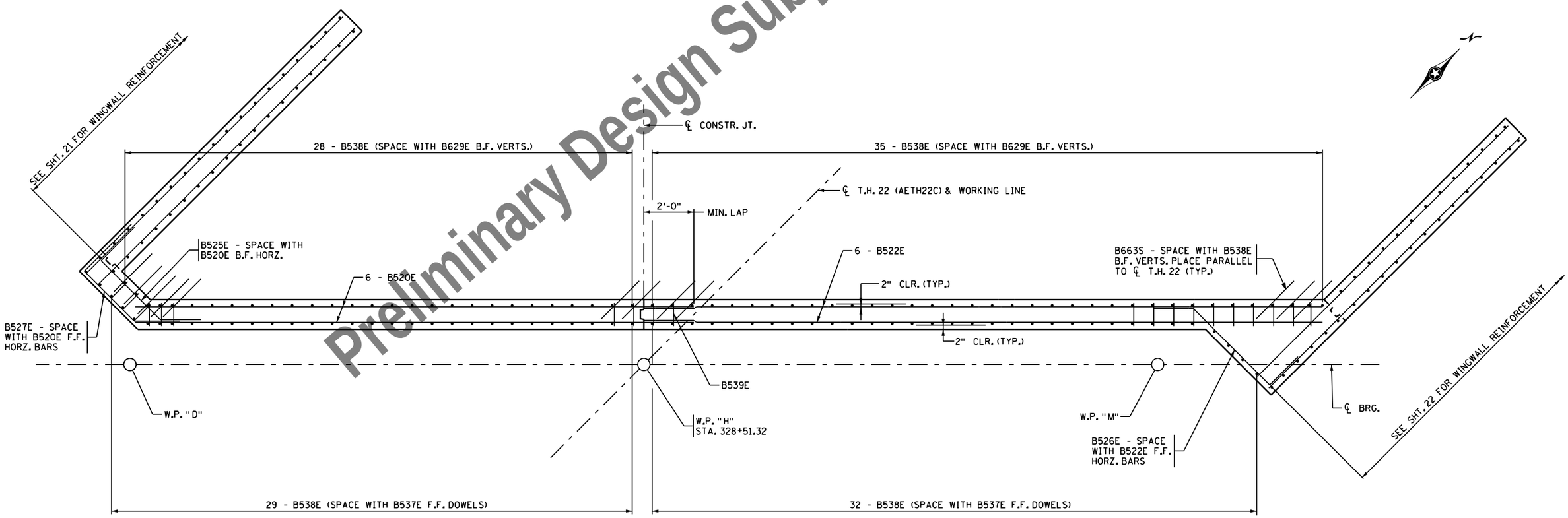

SECTION C-C

Preliminary Design Subject to Change

NO	DATE	BY	CHK	REVISIONS

I HEREBY CERTIFY THAT THIS PLAN WAS PREPARED BY ME OR UNDER MY DIRECT SUPERVISION AND THAT I AM A DULY LICENSED PROFESSIONAL ENGINEER UNDER THE LAWS OF THE STATE OF MINNESOTA.

LICENSED PROFESSIONAL ENGINEER: CARL OSBERG
DATE: 8/12/2016 REG NO: 42732

WSB & Associates, Inc.
701 Xenia Avenue South, Suite 300
Minneapolis, MN 55416
www.wsbeng.com
763-541-4800 - Fax 763-541-1700
INFRASTRUCTURE • ENGINEERING • PLANNING • CONSTRUCTION

BLUE EARTH COUNTY
MINNESOTA PROJ. NO. STP SM
STATE PROJECT NO. 0704-07051

TITLE: NORTH ABUTMENT REINFORCEMENT

DES: JH	DR: DJV	APPROVED:
CHK: CBO	CHK: CBO	

Sheet 20 of 54 Sheets

Bridge No. 07051

7/28/2016 10:35:34 AM
K:\03265-000\CadPlan\cbr0705i_nabutR3.dgn

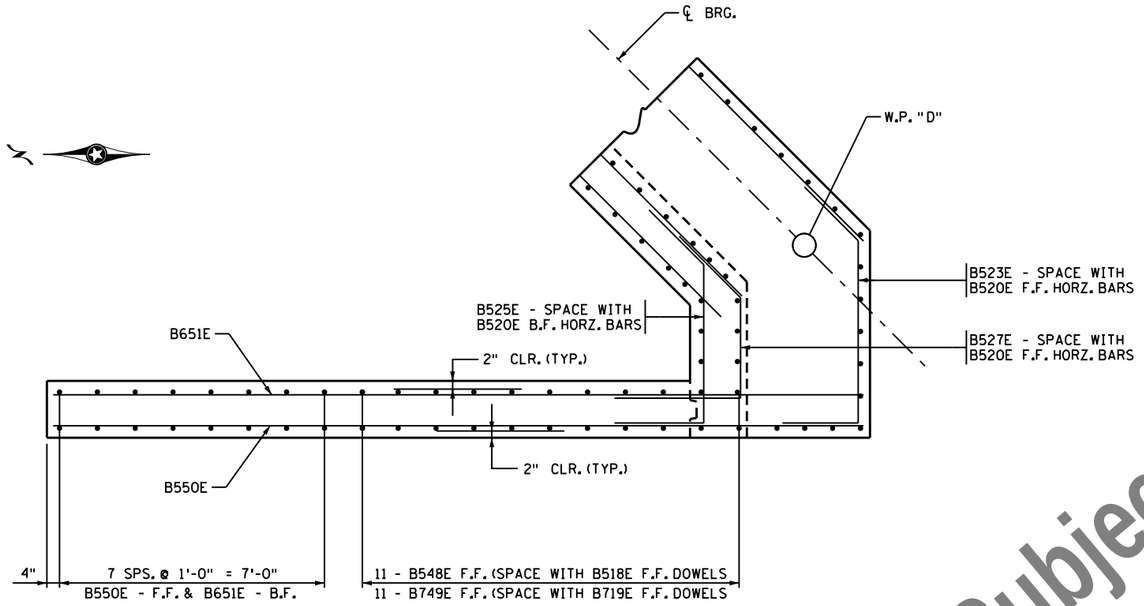

SECTION E-E @ N.W. WINGWALL

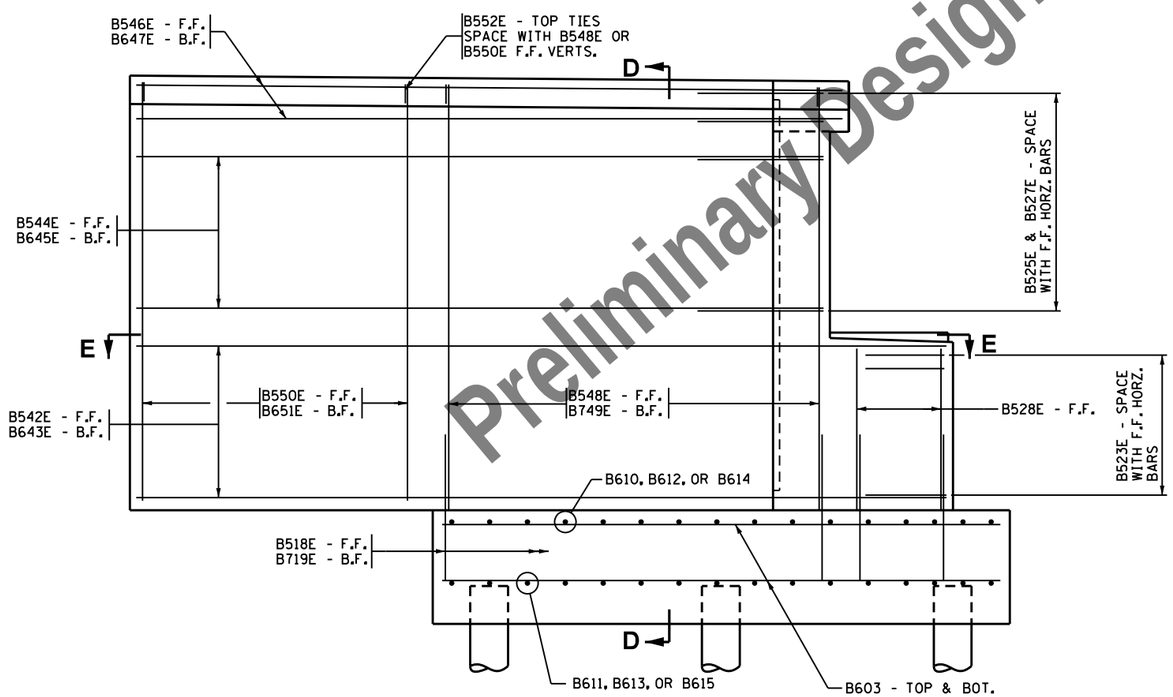

N.W. WINGWALL - ELEVATION VIEW

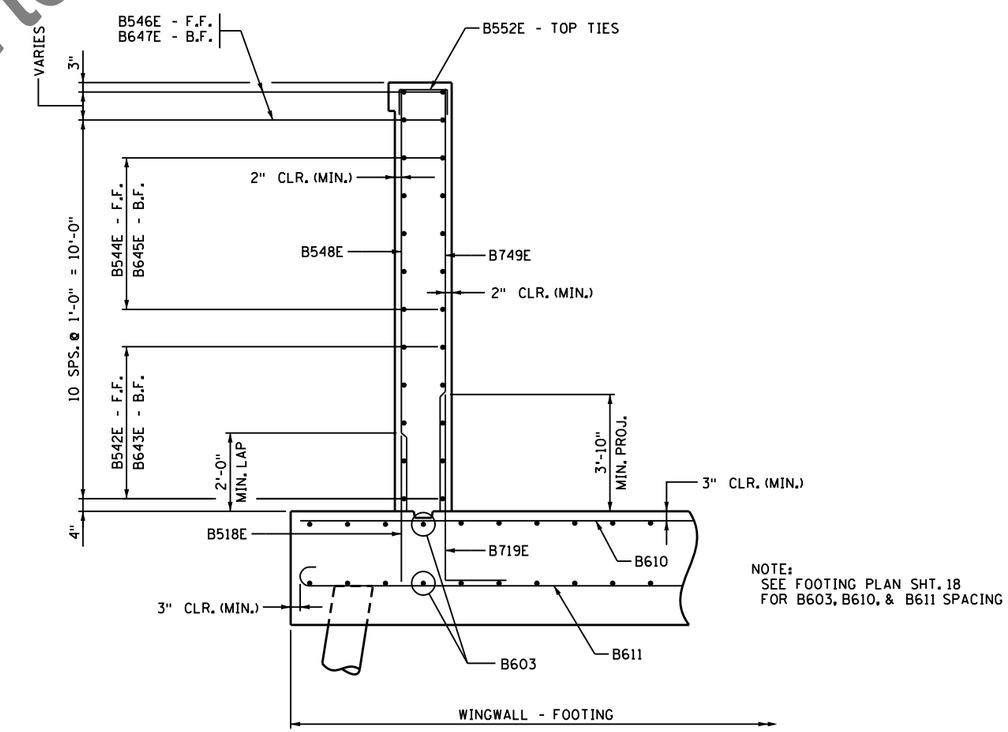

NOTE:
SEE FOOTING PLAN SHT. 18
FOR B603, B610, & B611 SPACING

SECTION D-D

Preliminary Design Subject to Change

7/28/2016 10:35:34 AM
K:\03265-000\Cad\Plan\cbr-0705l_nabutR4.dgn

NO	DATE	BY	CHK	REVISIONS

I HEREBY CERTIFY THAT THIS PLAN WAS PREPARED BY ME OR UNDER MY DIRECT SUPERVISION AND THAT I AM A DULY LICENSED PROFESSIONAL ENGINEER UNDER THE LAWS OF THE STATE OF MINNESOTA.

LICENSED PROFESSIONAL ENGINEER: CARL OSBERG
DATE: 8/12/2016 REG NO: 42732

WSB & Associates, Inc.
701 Xenia Avenue South, Suite 300
Minneapolis, MN 55416
www.wsbeng.com
763-541-4800 - Fax 763-541-1700
INFRASTRUCTURE • ENGINEERING • PLANNING • CONSTRUCTION

BLUE EARTH COUNTY
MINNESOTA PROJ. NO. STP SM
STATE PROJECT NO. 0704-07051

TITLE: **NORTH ABUTMENT REINFORCEMENT**

DES: JH	DR: DJV	APPROVED:
CHK: CBO	CHK: CBO	

Bridge No. 07051

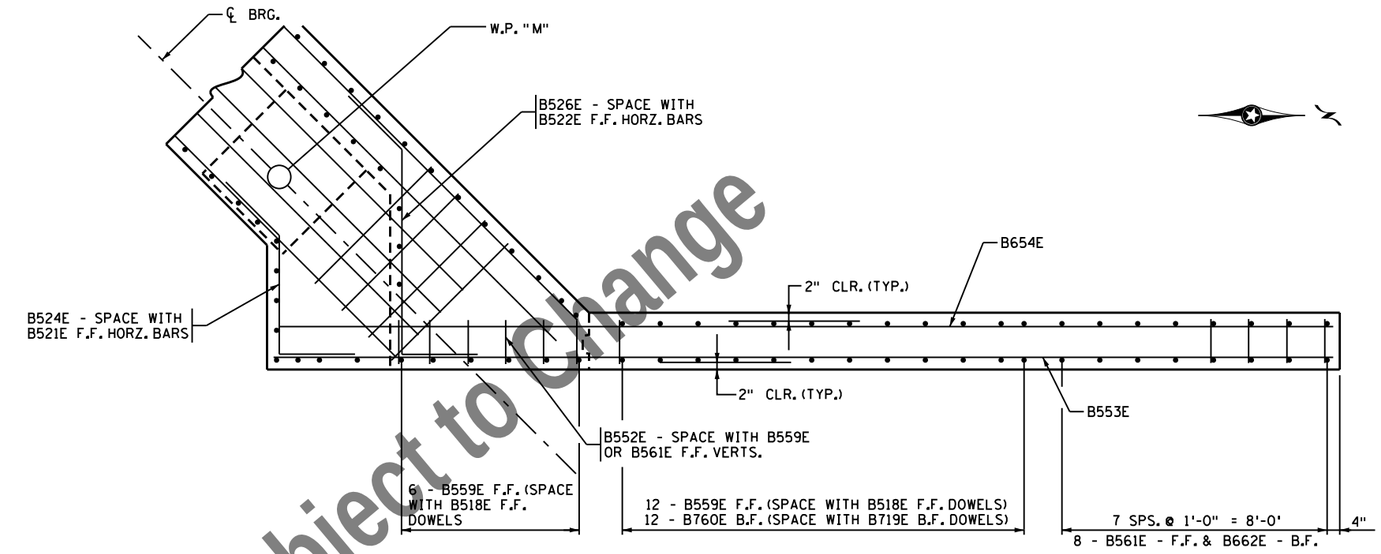

SECTION G-G @ N.E. WINGWALL

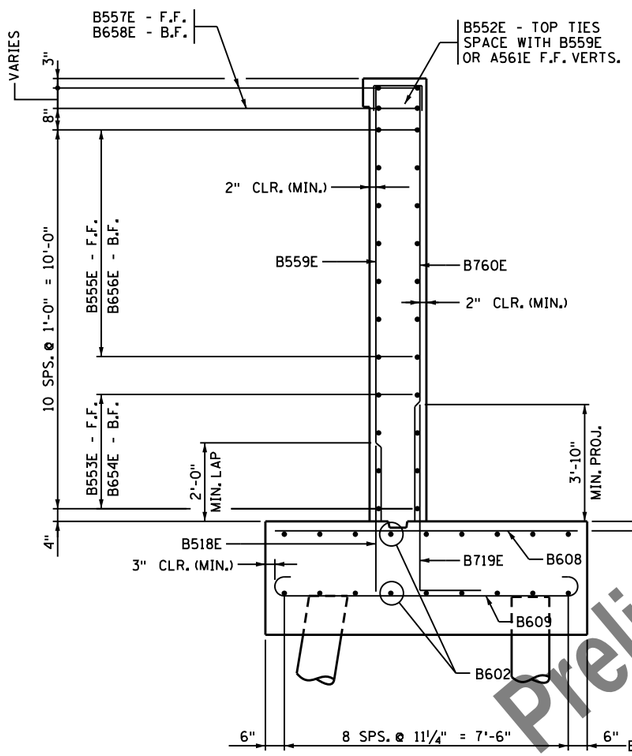

SECTION F-F

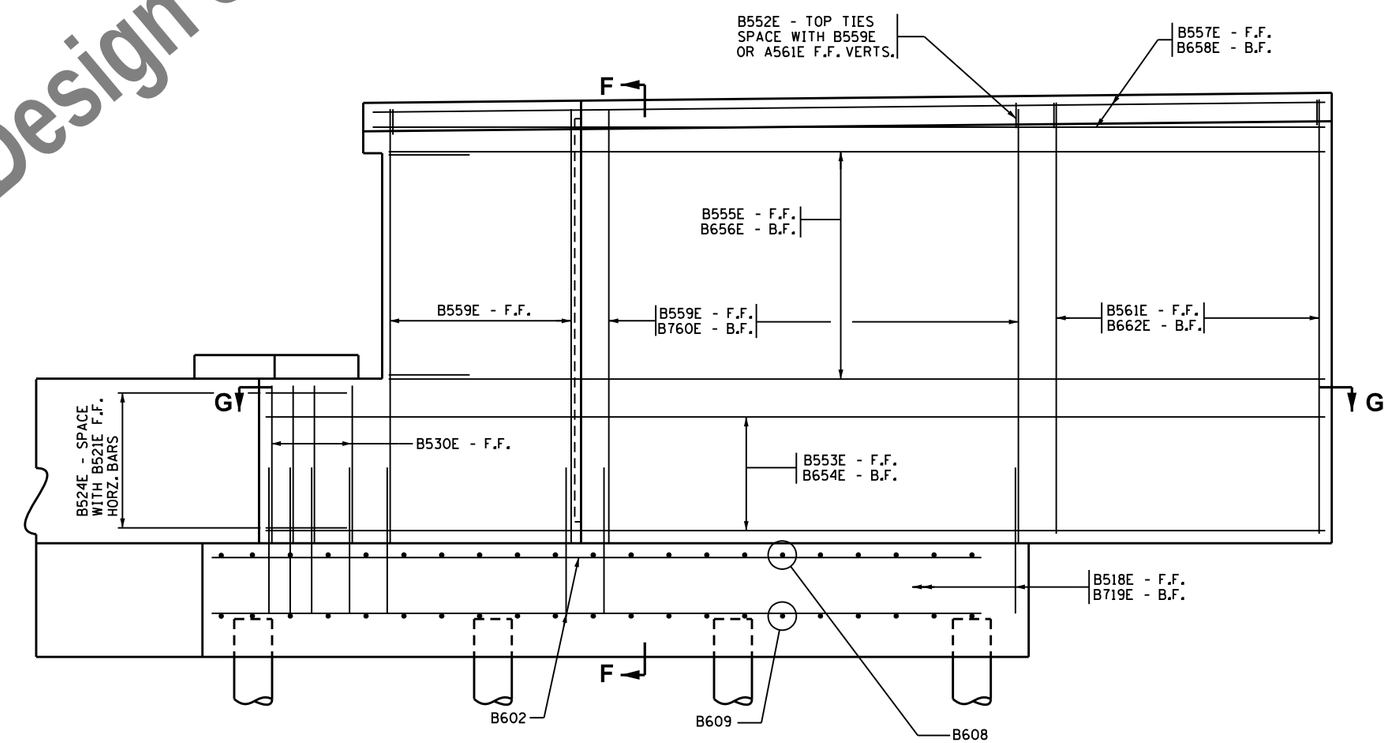

N.E. WINGWALL - ELEVATION VIEW

Preliminary Design Subject to Change

NO	DATE	BY	CHK	REVISIONS

I HEREBY CERTIFY THAT THIS PLAN WAS PREPARED BY ME OR UNDER MY DIRECT SUPERVISION AND THAT I AM A DULY LICENSED PROFESSIONAL ENGINEER UNDER THE LAWS OF THE STATE OF MINNESOTA.

LICENSED PROFESSIONAL ENGINEER: CARL OSBERG
DATE: 8/12/2016 REG NO: 42732

WSB & Associates, Inc.
701 Xenia Avenue South, Suite 300
Minneapolis, MN 55416
www.wsbeng.com
763-541-4800 - Fax 763-541-1700
INFRASTRUCTURE • ENGINEERING • PLANNING • CONSTRUCTION

BLUE EARTH COUNTY
MINNESOTA PROJ. NO. STP SM
STATE PROJECT NO. 0704-07051

TITLE: NORTH ABUTMENT REINFORCEMENT

DES: JH	DR: DJV	APPROVED:
CHK: CBO	CHK: CBO	

Sheet 22 of 54 Sheets

Bridge No. 07051

7/28/2016 10:35:34 AM
K:\03265-000\Cad\Plan\cbr07051_nabu1R5.dgn

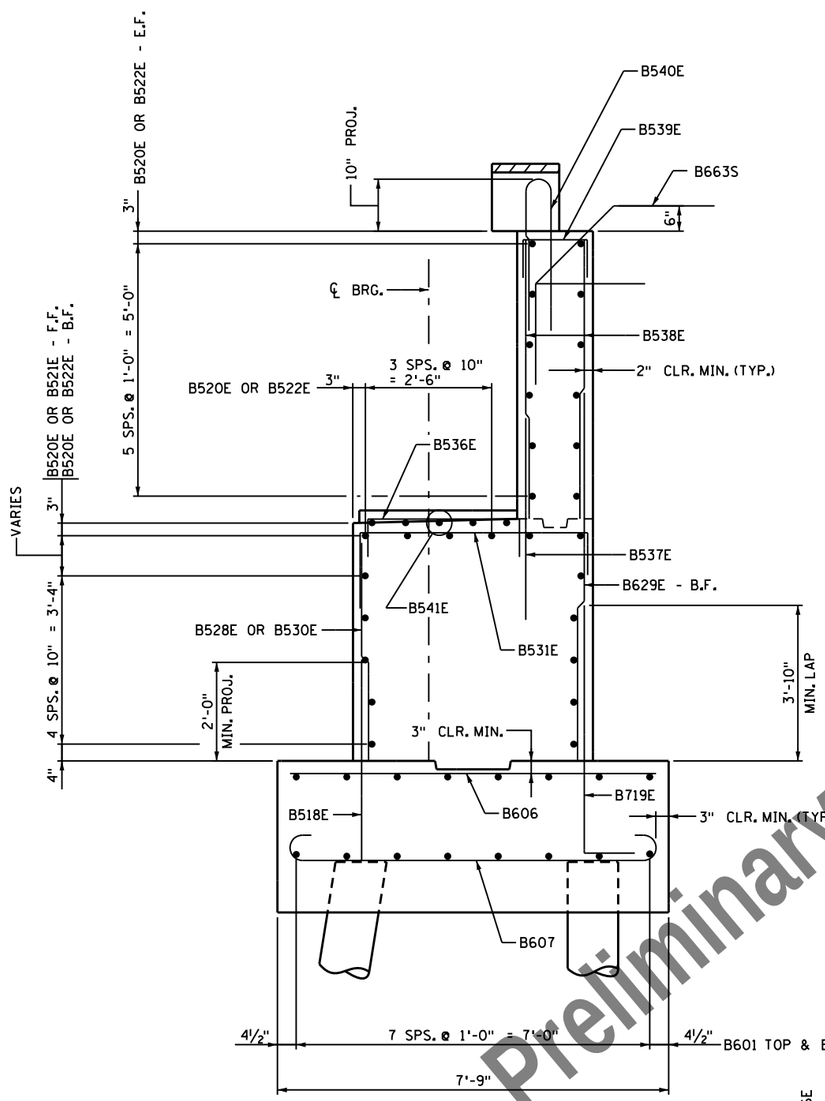

SECTION A-A

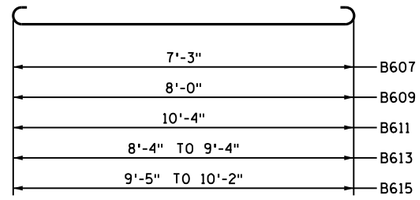

B607, B609, B611, B613, & B615

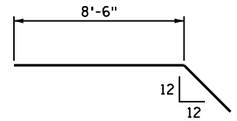

B616

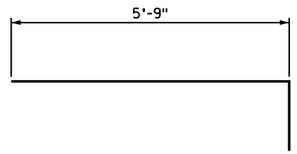

B719E

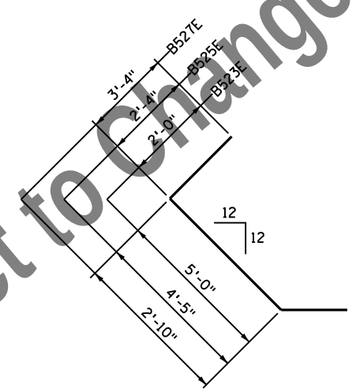

B523E, B525E, & B527E

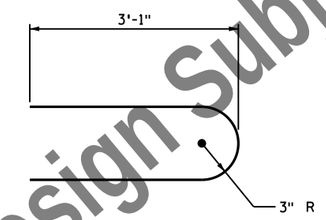

B540E

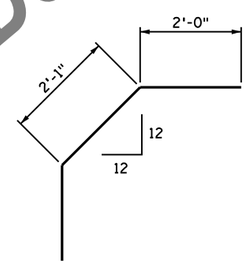

B663S

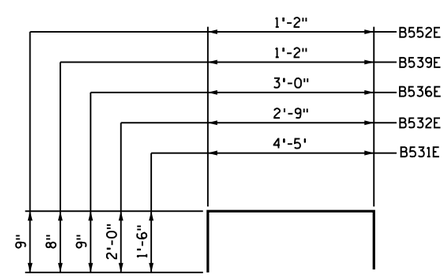

B531E, B532E, B536E, B539E, & B552E

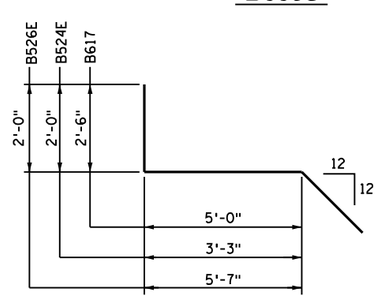

B617, B524E, & B526E

Preliminary Design Subject to Change

NORTH ABUTMENT - BILL OF REINFORCEMENT

BAR MARK	NUMBER	LENGTH	SHAPE	LOCATION
B601	32	30'-6"		FTG. - LONGIT TOP & BOT.
B602	18	21'-3"		FTG. - LONGIT TOP & BOT.
B603	16	14'-8"		FTG. - LONGIT TOP & BOT.
B604	2	5'-6"		FTG. - LONGIT TOP & BOT.
B605	2	3'-6"		FTG. - LONGIT TOP & BOT.
B606	56	7'-3"		FTG. - TRANSV. TOP
B607	56	8'-7"		FTG. - TRANSV. BOT.
B608	21	8'-0"		FTG. - TRANSV. TOP
B609	21	9'-4"		FTG. - TRANSV. BOT.
B610	11	10'-4"		FTG. - TRANSV. TOP
B611	11	11'-8"		FTG. - TRANSV. BOT.
B612	2	(A)		FTG. - TRANSV. TOP
B613	2	(B)		FTG. - TRANSV. BOT.
B614	2	(C)		FTG. - TRANSV. TOP
B615	2	(D)		FTG. - TRANSV. BOT.
B616	2	11'-0"		FTG. - TRANSV. TOP & BOT.
B617	2	10'-0"		FTG. - TRANSV. TOP & BOT.
B518E	100	4'-0"		FTG. - DOWELS
B719E	85	6'-9"		FTG. - DOWELS
B520E	28	29'-7"		STEM - HORZ.
B521E	9	31'-2"		STEM - HORZ.
B522E	19	34'-0"		STEM - HORZ.
B523E	6	9'-0"		STEM - HORZ. @ CORNER
B524E	6	7'-3"		STEM - HORZ. @ CORNER
B525E	12	8'-9"		STEM - HORZ.
B526E	6	9'-7"		STEM - HORZ.
B527E	6	8'-2"		PARAPET WALL - HORZ.
B528E	33	4'-2"		STEM - VERTS.
B629E	63	7'-2"		STEM - VERTS.
B530E	32	4'-2"		STEM - VERTS.
B531E	59	6'-7"		STEM - BR. SEAT TIES
B532E	14	6'-9"		STEM - SHEAR LUG TIES
B533E	4	9'-6"		STEM - SHEAR LUG HORZ.
B534E	3	6'-10"		STEM - SHEAR LUG HORZ.
B535E	1	7'-3"		STEM - SHEAR LUG HORZ.
B536E	24	4'-6"		PEDESTAL - TIES
B537E	61	4'-0"		STEM - VERTS.
B538E	124	5'-7"		PARAPET WALL - VERTS.
B539E	63	2'-6"		PARAPET WALL - TOP TIES
B540E	61	6'-6"		PARAPET WALL TO ENDSLAB
B541E	20	2'-8"		PEDESTAL - HORZ.
B542E	5	21'-4"		N.W. WINGWALL - HORZ.
B643E	5	21'-4"		N.W. WINGWALL - HORZ.
B544E	5	18'-1"		N.W. WINGWALL - HORZ.
B645E	5	18'-1"		N.W. WINGWALL - HORZ.
B546E	2	18'-7"		N.W. WINGWALL - HORZ.
B647E	2	18'-7"		N.W. WINGWALL - HORZ.
B548E	11	11'-1"		N.W. WINGWALL - VERTS.
B749E	11	11'-1"		N.W. WINGWALL - VERTS.
B550E	8	10'-11"		N.W. WINGWALL - VERTS.
B651E	8	10'-11"		N.W. WINGWALL - VERTS.
B552E	45	2'-8"		BOTH WINGWALLS - TOP TIES
B553E	4	27'-11"		N.E. WINGWALL - HORZ.
B654E	4	27'-11"		N.E. WINGWALL - HORZ.
B555E	6	24'-8"		N.E. WINGWALL - HORZ.
B656E	6	24'-8"		N.E. WINGWALL - HORZ.
B557E	2	25'-2"		N.E. WINGWALL - HORZ.
B658E	2	25'-2"		N.E. WINGWALL - HORZ.
B559E	18	11'-5"		N.E. WINGWALL - VERT.
B760E	12	11'-5"		N.E. WINGWALL - VERT.
B561E	8	11'-4"		N.E. WINGWALL - VERT..
B662E	8	11'-4"		N.E. WINGWALL - VERT.
(E) B663S	61	6'-1"		PARAPET WALL TO APP. PANEL

(A) 1 SERIES OF 2 BARS (8'-4" TO 9'-4")
(B) 1 SERIES OF 2 BARS (9'-8" TO 10'-8")
(C) 1 SERIES OF 2 BARS (9'-5" TO 10'-2")
(D) 1 SERIES OF 2 BARS (10'-9" TO 11'-6")

(E) STAINLESS STEEL REINFORCEMENT

NO	DATE	BY	CHK	REVISIONS

I HEREBY CERTIFY THAT THIS PLAN WAS PREPARED BY ME OR UNDER MY DIRECT SUPERVISION AND THAT I AM A DULY LICENSED PROFESSIONAL ENGINEER UNDER THE LAWS OF THE STATE OF MINNESOTA.

LICENSED PROFESSIONAL ENGINEER: CARL OSBERG
DATE: 8/12/2016 REG NO: 42732

WSB & Associates, Inc.
701 Xenia Avenue South, Suite 300
Minneapolis, MN 55416
www.wsbeng.com
763-541-4800 - Fax 763-541-1700
INFRASTRUCTURE • ENGINEERING • PLANNING • CONSTRUCTION

BLUE EARTH COUNTY
MINNESOTA PROJ. NO. STP SM
STATE PROJECT NO. 0704-07051

TITLE: NORTH ABUTMENT REINFORCEMENT

DES: JH | DR: DJV | APPROVED:
CHK: CBO | CHK: CBO

Bridge No. 07051

7/28/2016 10:35:35 AM
K:\03265-000\CadPlan\cbr07051_nabutR6.dgn

PIER 1 REQUIRED NOMINAL PILE BEARING RESISTANCE FOR C.I.P. PILES R_n - TONS/PILE		
FIELD CONTROL METHOD	Φ dyn	* R_n
MN/DOT PILE FORMULA 2012 (MPF12) $R_n = 20\sqrt{\frac{W \times H}{1000}} \times \log(\frac{10}{S})$	0.50	258.2
PDA	0.65	198.6

* R_n = (FACTORED DESIGN LOAD) / Φ dyn

PIER 1 COMPUTED PILE LOAD - TONS/PILE	
	PIER 1
FACTORED DEAD LOAD	71.2
FACTORED OVERTURNING	35.4
FACTORED DOWNDRAG	49.5
*** FACTORED DEAD LOAD + OVERTURNING + DOWNDRAG	156.1

*** BASED ON STRENGTH 1 LOAD COMBINATION, NOT INCLUDING TRANSIENT LOADS. ONLY USED FOR COMPARISON WITH FACTORED STRUCTURAL RESISTANCE. NOT TO BE USED FOR DRIVING.

PIER 1 COMPUTED PILE LOAD - TONS/PILE	
	PIER 1
FACTORED DEAD LOAD	71.2
FACTORED LIVE LOAD	22.5
FACTORED OVERTURNING	35.4
** FACTORED DESIGN LOAD	129.1

** BASED ON STRENGTH 1 LOAD COMBINATION.

SUMMARY OF QUANTITIES - PIER 1		
STRUCTURAL CONCRETE (1G52)	94	CU. YD.
STRUCTURAL CONCRETE (3B52)	152	CU. YD.
REINFORCEMENT BARS	11590	POUND
REINFORCEMENT BARS (EPOXY COATED)	33770	POUND
C-I-P CONCRETE TEST PILE 75 FT. LONG 16'	1	EACH
C-I-P CONCRETE PILING 16"	1365	LIN. FT.
STRUCTURE EXCAVATION	1	LUMP SUM
FOUNDATION PREPARATION PIER 1	1	LUMP SUM
PILE REDRIVING	1	EACH

PILE NOTES

1 C-I-P CONCRETE TEST PILES 75 FT. LONG
21 C-I-P CONCRETE PILES EST. LENGTH 65 FT.
22 C-I-P CONCRETE PILES REQ'D FOR PIER 1

PILE SPACING SHOWN IS AT BOTTOM OF FOOTING.

PILES MARKED ⊖→ THUS TO BE BATTERED 2" PER FOOT IN THE DIRECTION SHOWN.

PILES TO HAVE A NOMINAL DIAMETER OF 16" AND A WALL THICKNESS OF 5/16".

FOR PILE SPLICE DETAILS SEE DETAIL B201.

PILE CUTOFF IS EL. 952.50

PILES TO BE DRIVEN TO A MINIMUM TIP ELEVATION OF 925.00

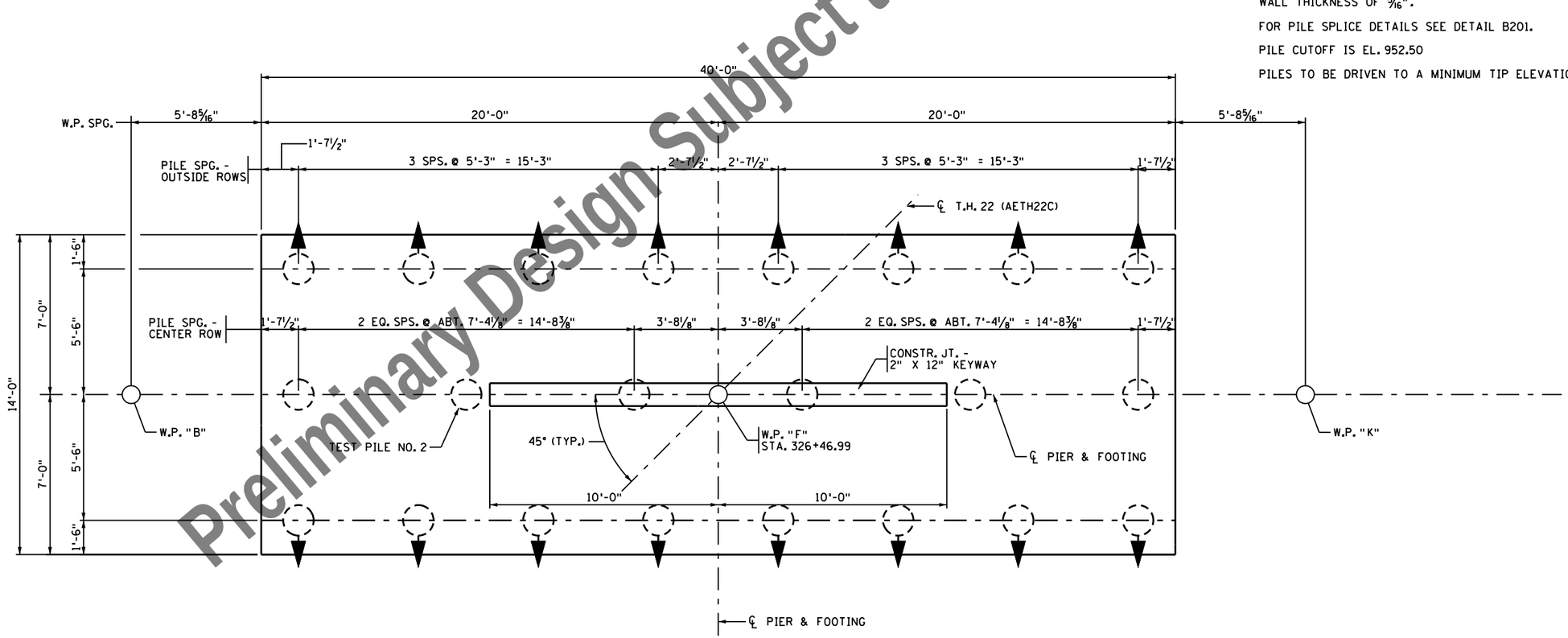

FOOTING - PLAN VIEW

Preliminary Design Subject to Change

NO	DATE	BY	CHK	REVISIONS

I HEREBY CERTIFY THAT THIS PLAN WAS PREPARED BY ME OR UNDER MY DIRECT SUPERVISION AND THAT I AM A DULY LICENSED PROFESSIONAL ENGINEER UNDER THE LAWS OF THE STATE OF MINNESOTA.

LICENSED PROFESSIONAL ENGINEER: CARL OSBERG
DATE: 8/12/2016 REG NO: 42732

WSB & Associates, Inc.
701 Xenia Avenue South, Suite 300
Minneapolis, MN 55416
www.wsbeng.com
763-541-4800 - Fax 763-541-1700
INFRASTRUCTURE • ENGINEERING • PLANNING • CONSTRUCTION

BLUE EARTH COUNTY
MINNESOTA PROJ. NO. STP SM
STATE PROJECT NO. 0704-07051

TITLE: PIER 1 DETAILS

DES: JH	DR: DJV	APPROVED:
CHK: CBO	CHK: CBO	

Sheet 24 of 54 Sheets

Bridge No. 07051

7/28/2016 10:35:35 AM
K:\03265-000\Cad\Plan\cbr-0705l_2pier1.dgn

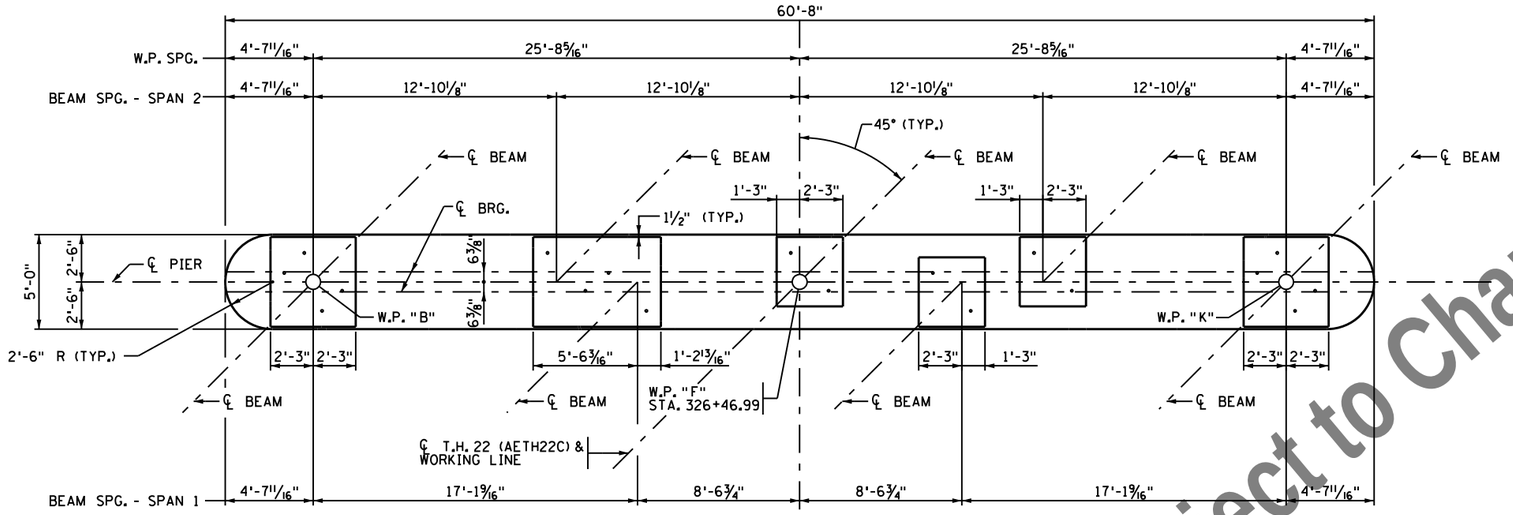

PLAN VIEW

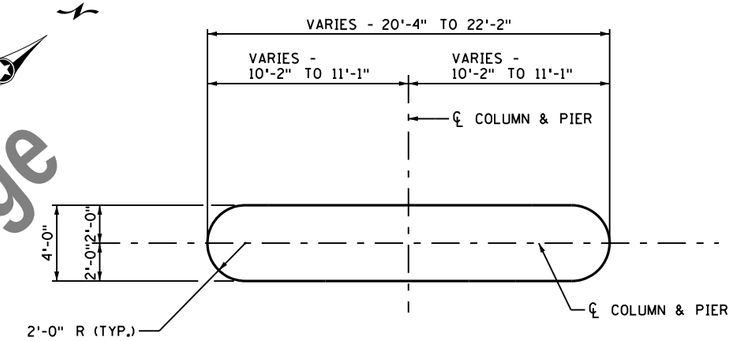

SECTION A-A

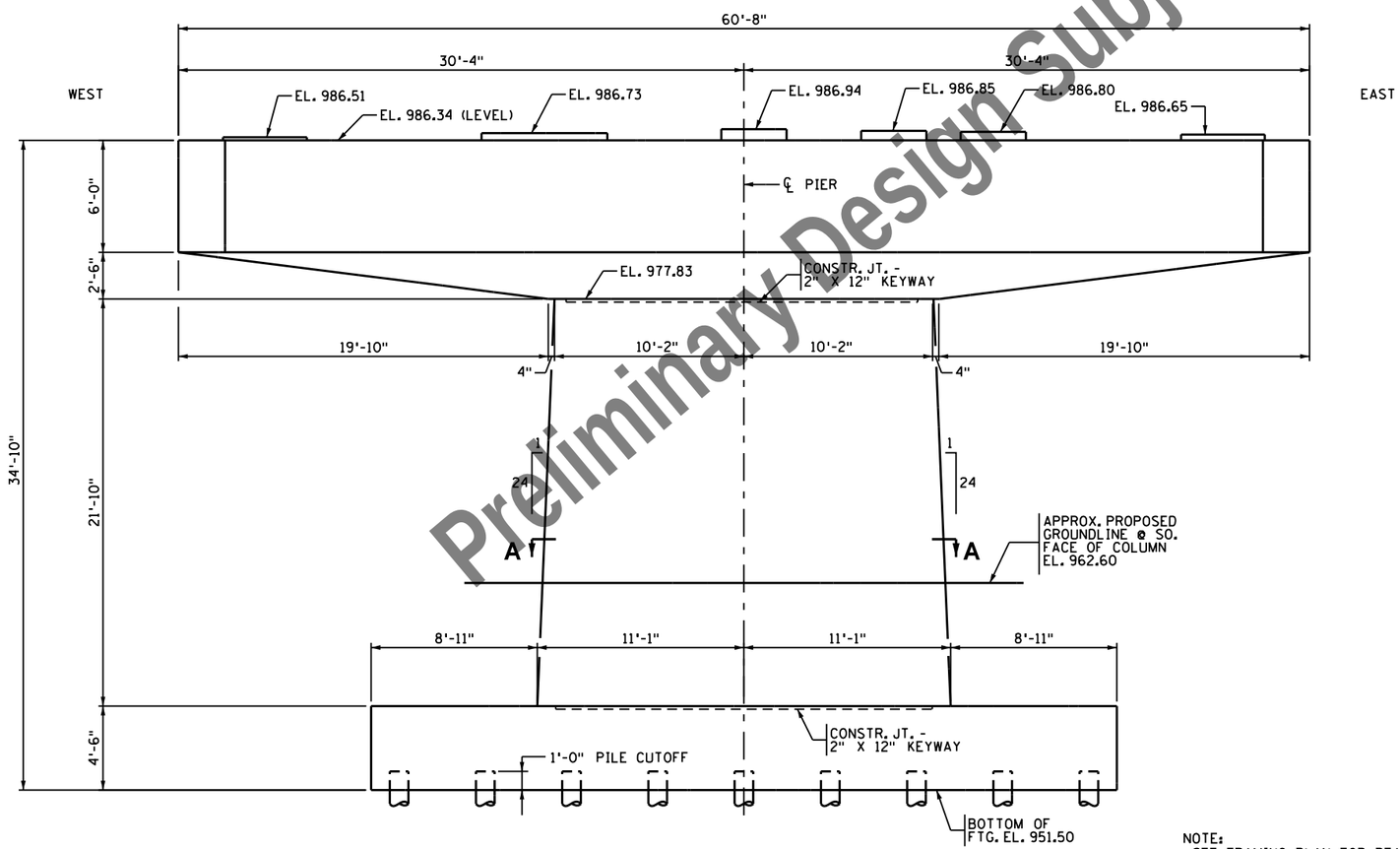

ELEVATION VIEW

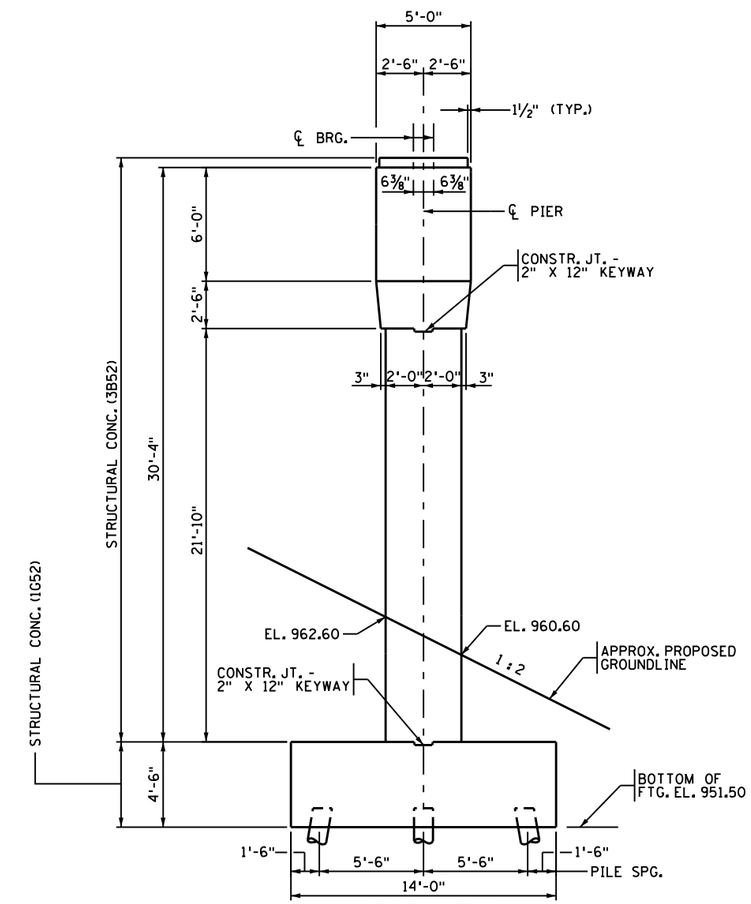

END VIEW

NOTE:
SEE FRAMING PLAN FOR BEAM SPG. PERPENDICULAR TO ℄ BEAMS FOR EACH SPAN.

Preliminary Design Subject to Change

NO	DATE	BY	CHK	REVISIONS

I HEREBY CERTIFY THAT THIS PLAN WAS PREPARED BY ME OR UNDER MY DIRECT SUPERVISION AND THAT I AM A DULY LICENSED PROFESSIONAL ENGINEER UNDER THE LAWS OF THE STATE OF MINNESOTA.

LICENSED PROFESSIONAL ENGINEER: CARL OSBERG
DATE: 8/12/2016 REG NO: 42732

WSB & Associates, Inc.
701 Xenia Avenue South, Suite 300
Minneapolis, MN 55416
www.wsbeng.com
763-541-4800 - Fax 763-541-1700
INFRASTRUCTURE • ENGINEERING • PLANNING • CONSTRUCTION

BLUE EARTH COUNTY
MINNESOTA PROJ. NO. STP SM
STATE PROJECT NO. 0704-07051

TITLE: **PIER 1 DETAILS**

DES: JH	DR: DJV	APPROVED:
CHK: CBO	CHK: CBO	

Sheet 25 of 54 Sheets

Bridge No. 07051

7/28/2016 10:35:36 AM
K:\03265-000\CadPlan\cbr0705l_pier1.dgn

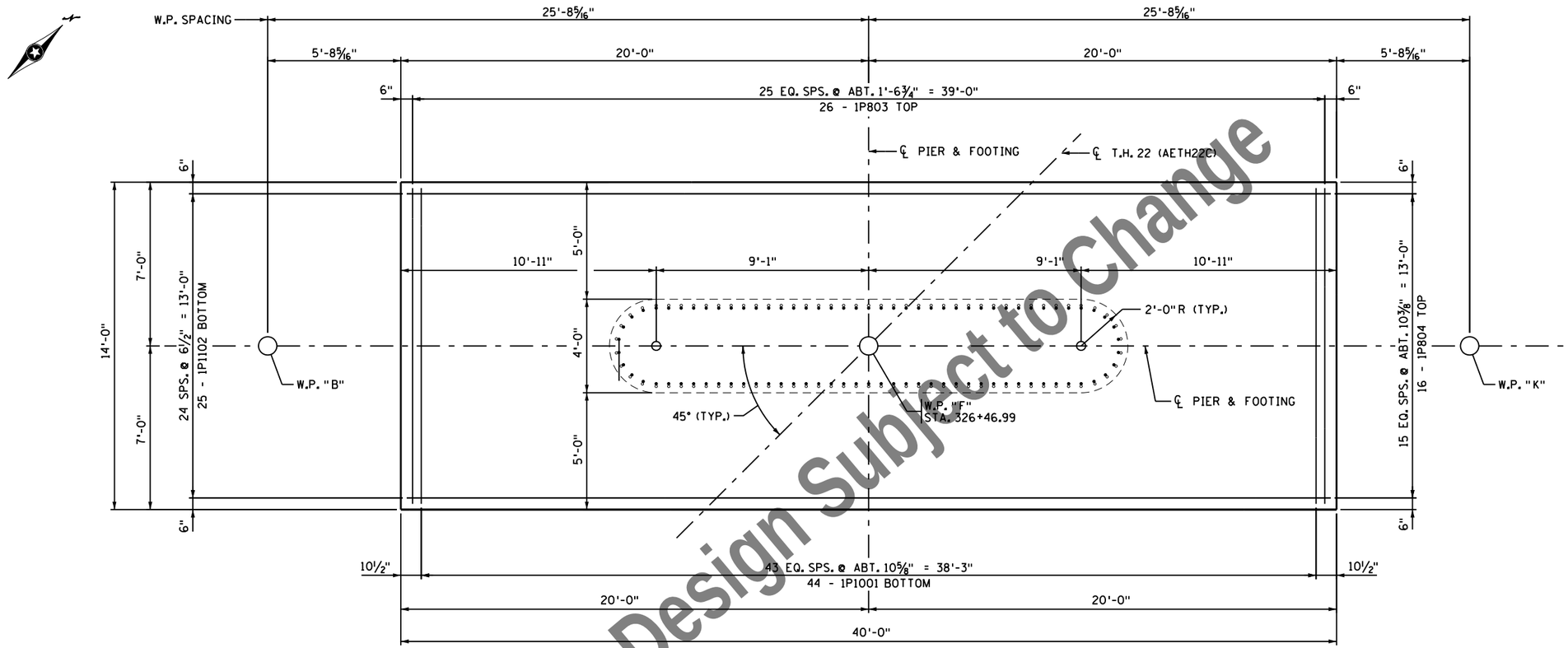

FOOTING REINFORCEMENT

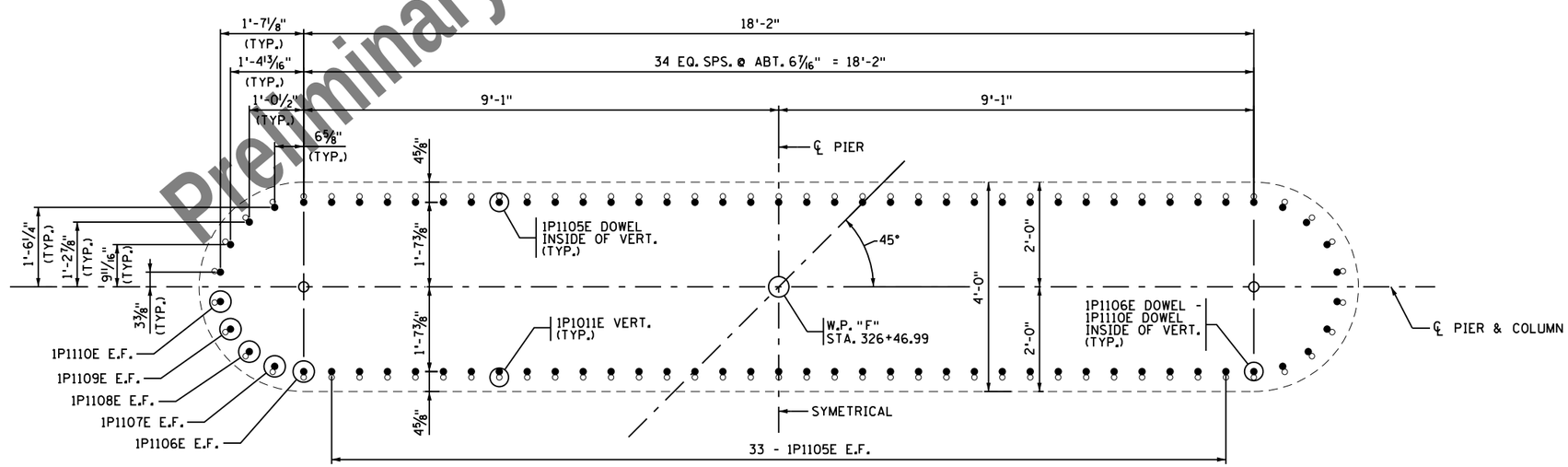

FOOTING DOWEL LAYOUT

DIMENSIONS ARE AT TOP OF FOOTING

Preliminary Design Subject to Change

NO	DATE	BY	CHK	REVISIONS

I HEREBY CERTIFY THAT THIS PLAN WAS PREPARED BY ME OR UNDER MY DIRECT SUPERVISION AND THAT I AM A DULY LICENSED PROFESSIONAL ENGINEER UNDER THE LAWS OF THE STATE OF MINNESOTA.

LICENSED PROFESSIONAL ENGINEER: CARL OSBERG
DATE: 8/12/2016 REG NO: 42732

WSB & Associates, Inc.
701 Xenia Avenue South, Suite 300
Minneapolis, MN 55416
www.wsbeng.com
763-541-4800 - Fax 763-541-1700
INFRASTRUCTURE • ENGINEERING • PLANNING • CONSTRUCTION

BLUE EARTH COUNTY
MINNESOTA PROJ. NO. STP SM
STATE PROJECT NO. 0704-07051

TITLE: PIER 1 REINFORCEMENT

DES: JH	DR: SWH	APPROVED:	Bridge No. 07051
CHK: CBO	CHK: CBO		
Sheet 26 of 54 Sheets			

7/28/2016 10:35:36 AM
K:\03265-000\Cad\Plan\cbr07051_3pier1.dgn

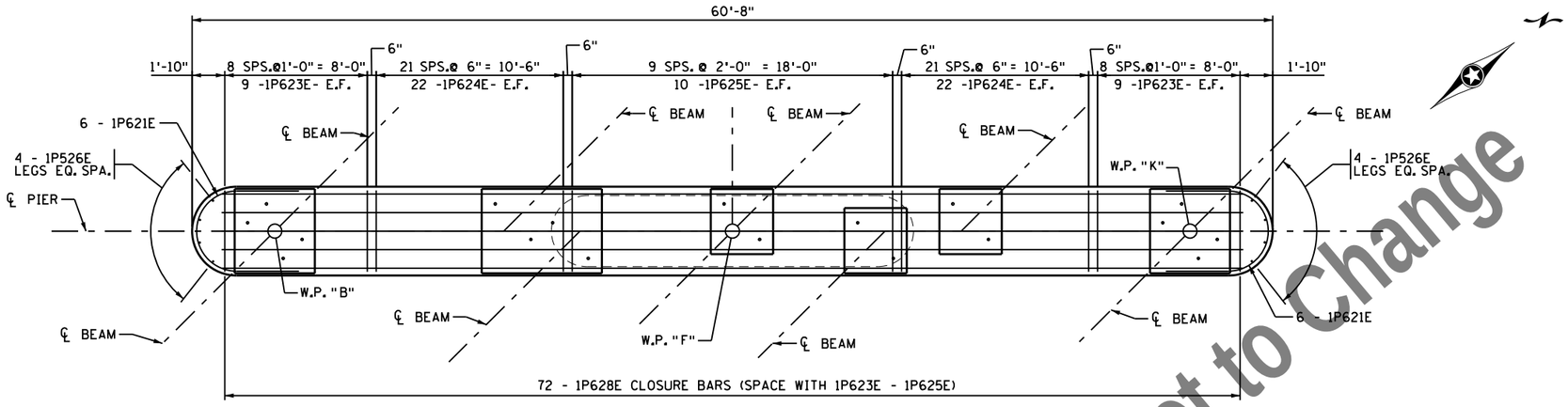

PLAN VIEW

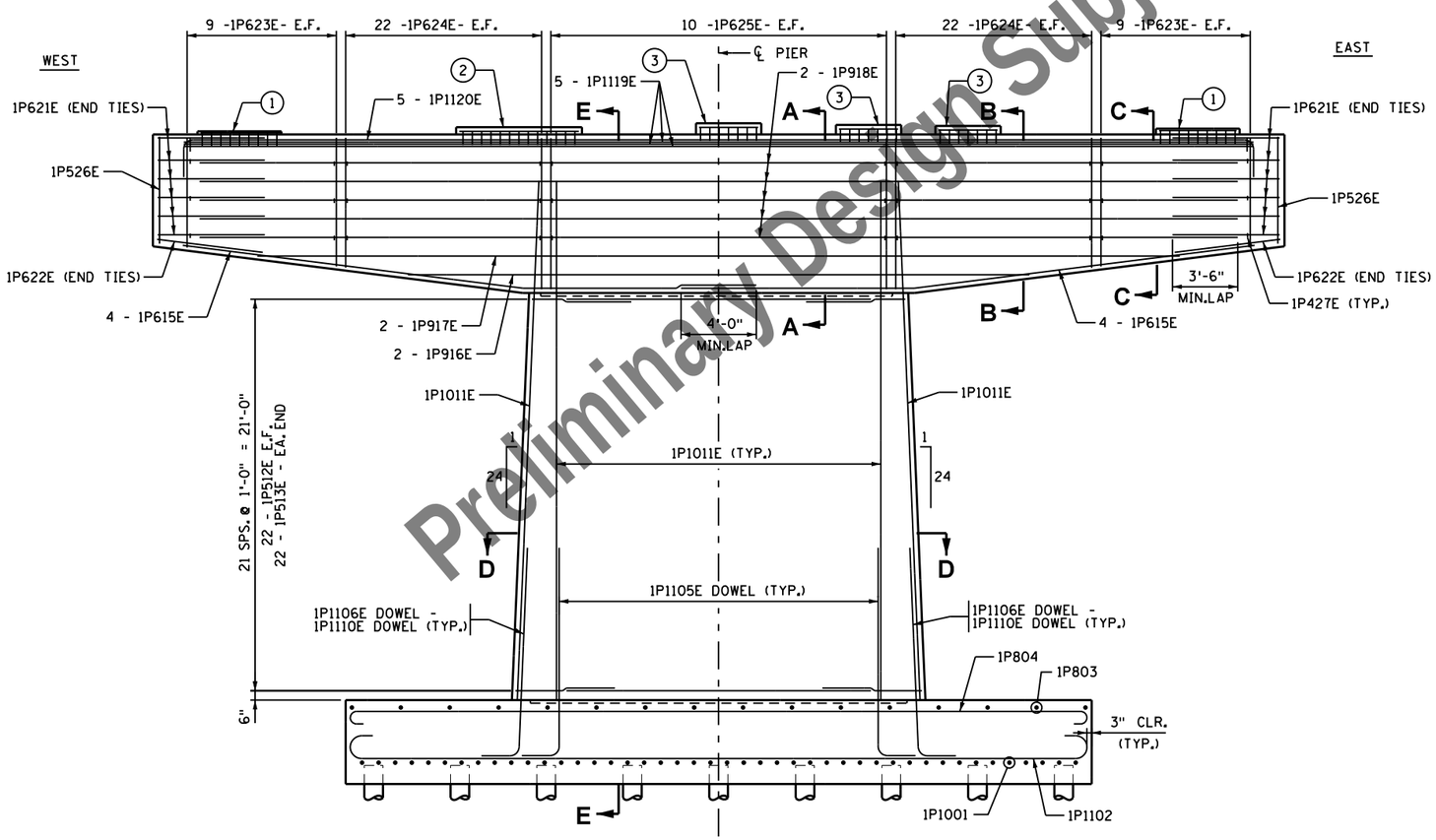

ELEVATION VIEW

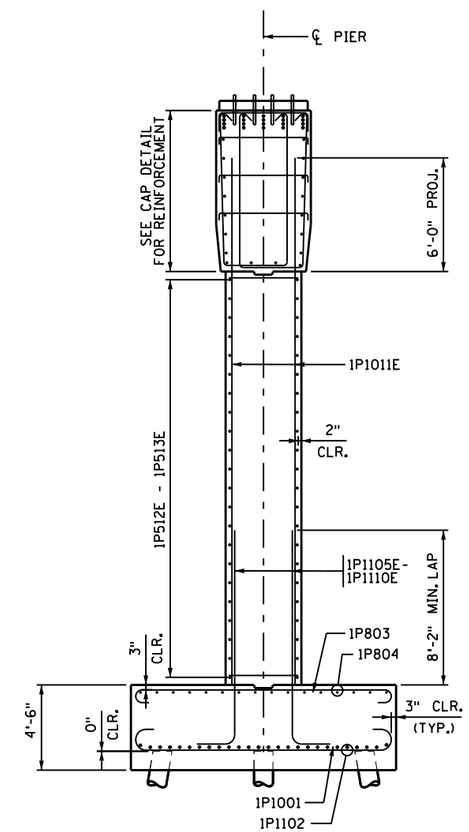

SECTION E-E

NOTES:

SEE SHEET 28 FOR SECTION A-A, SECTION B-B, SECTION C-C AND SECTION D-D.

1. SEE SHEET 29 FOR PEDESTAL TYPE "A" DETAIL.
2. SEE SHEET 29 FOR PEDESTAL TYPE "B" DETAIL.
3. SEE SHEET 29 FOR PEDESTAL TYPE "C" DETAIL.

Preliminary Design Subject to Change

NO	DATE	BY	CHK	REVISIONS

I HEREBY CERTIFY THAT THIS PLAN WAS PREPARED BY ME OR UNDER MY DIRECT SUPERVISION AND THAT I AM A DULY LICENSED PROFESSIONAL ENGINEER UNDER THE LAWS OF THE STATE OF MINNESOTA.

LICENSED PROFESSIONAL ENGINEER: CARL OSBERG
DATE: 8/12/2016 REG NO: 42732

WSB & Associates, Inc.
701 Xenia Avenue South, Suite 300
Minneapolis, MN 55416
www.wsbeng.com
763-541-4800 - Fax 763-541-1700
INFRASTRUCTURE • ENGINEERING • PLANNING • CONSTRUCTION

BLUE EARTH COUNTY
MINNESOTA PROJ. NO. STP SM
STATE PROJECT NO. 0704-07051

TITLE: PIER 1 REINFORCEMENT

DES: JH	DR: SWH	APPROVED:
CHK: CBO	CHK: CBO	

Sheet 27 of 54 Sheets

Bridge No. 07051

7/28/2016 10:35:36 AM
K:\03265-000\Cad\Plan\cbr07051_4pier1.dgn

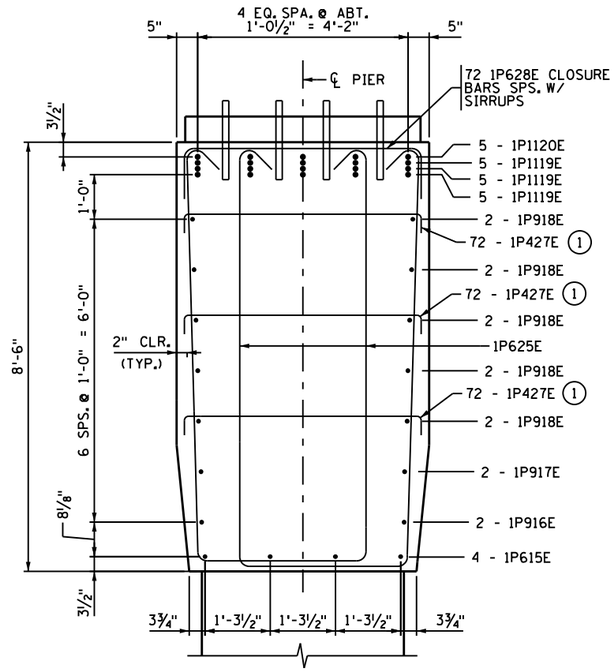

SECTION A-A

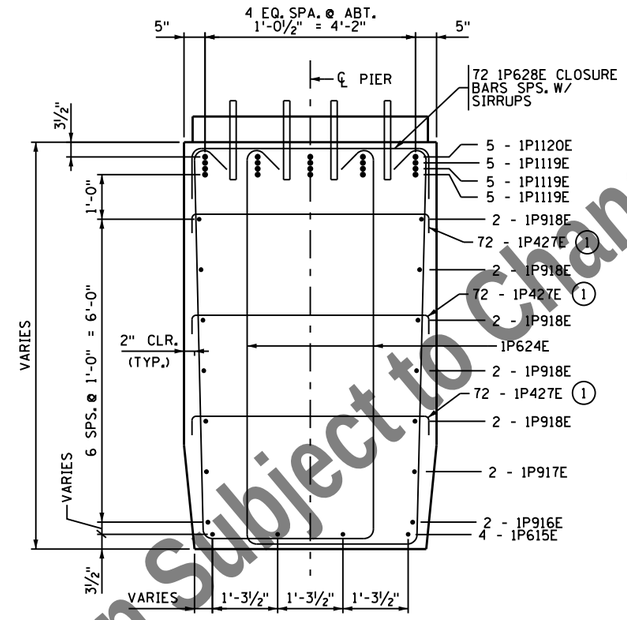

SECTION B-B

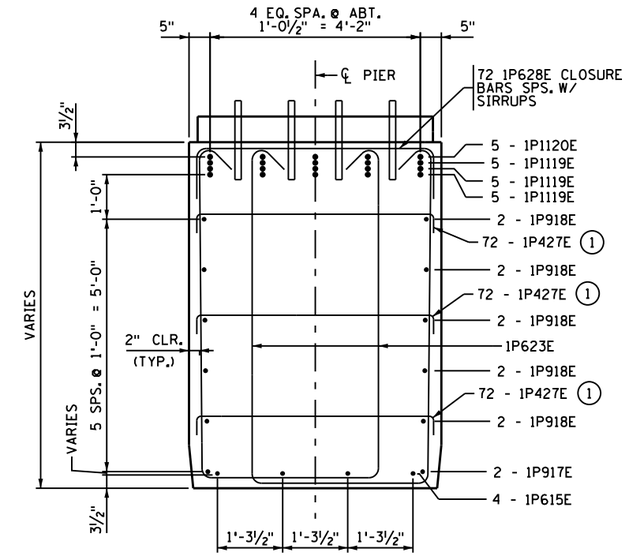

SECTION C-C

NOTES:

(1) - SPACE WITH 1P623E - 1P625E STURRUP BARS.

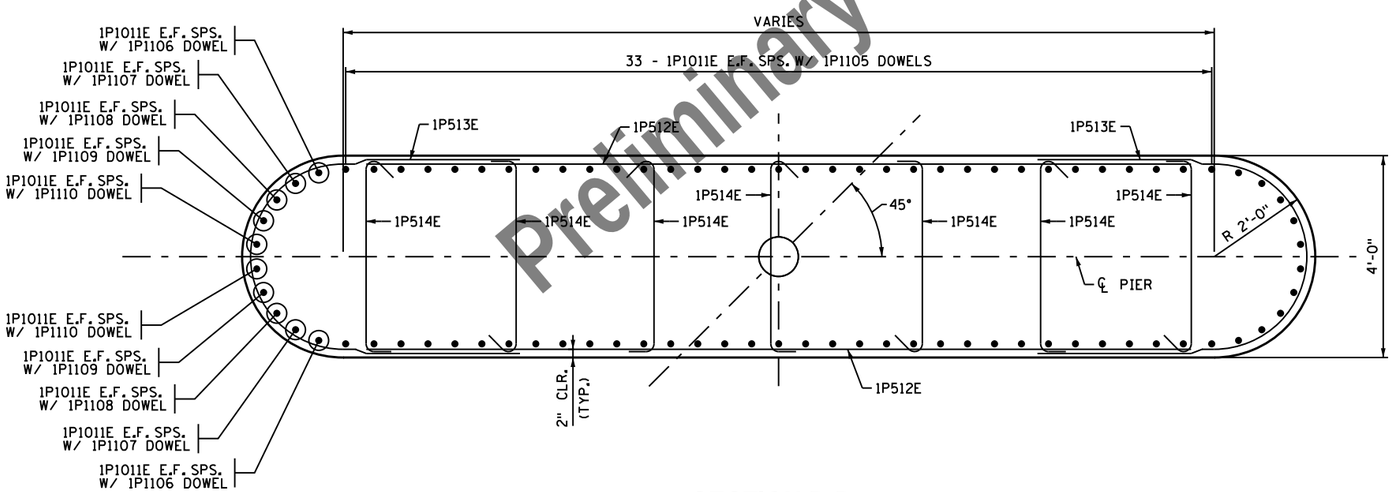

SECTION D-D

Preliminary Design Subject to Change

NO	DATE	BY	CHK	REVISIONS

I HEREBY CERTIFY THAT THIS PLAN WAS PREPARED BY ME OR UNDER MY DIRECT SUPERVISION AND THAT I AM A DULY LICENSED PROFESSIONAL ENGINEER UNDER THE LAWS OF THE STATE OF MINNESOTA.

LICENSED PROFESSIONAL ENGINEER: CARL OSBERG
DATE: 8/12/2016 REG NO: 42732

WSB & Associates, Inc.
701 Xenia Avenue South, Suite 300
Minneapolis, MN 55416
www.wsbeng.com
763-541-4800 - Fax 763-541-1700
INFRASTRUCTURE • ENGINEERING • PLANNING • CONSTRUCTION

BLUE EARTH COUNTY
MINNESOTA PROJ. NO. STP SM
STATE PROJECT NO. 0704-07051

TITLE: PIER 1 REINFORCEMENT

DES: JH	DR: SWH	APPROVED:
CHK: CBO	CHK: CBO	

Sheet 28 of 54 Sheets

Bridge No. 07051

7/28/2016 10:35:37 AM
K:\03265-000\Cad\Plan\cbr0705l_5pier1.dgn

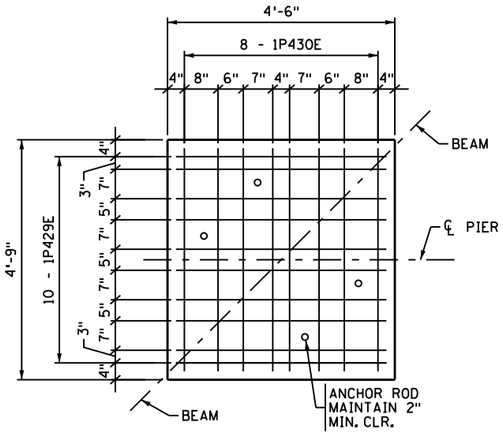

PEDESTAL TYPE "A" PLAN VIEW

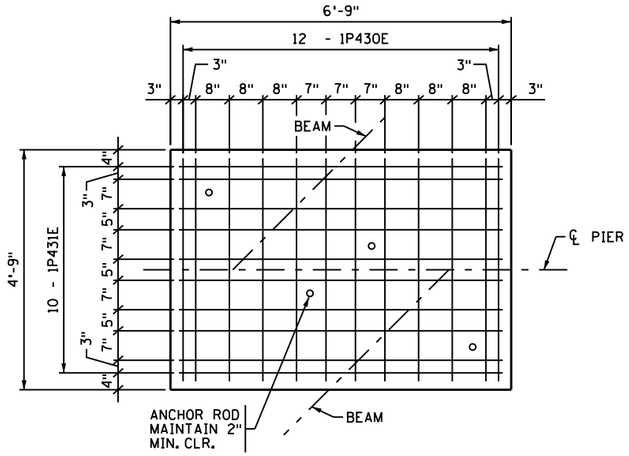

PEDESTAL TYPE "B" PLAN VIEW

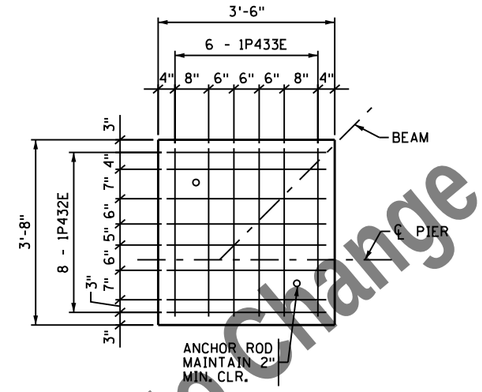

PEDESTAL TYPE "C" PLAN VIEW

PIER 1 - BILL OF REINFORCEMENT

BAR MARK	NUMBER	LENGTH	SHAPE	LOCATION
1P1001	44	16'-4"		FTG. - BOTTOM TRANSV.
1P1102	25	42'-8"		FTG. - BOTTOM LONGIT.
1P803	26	15'-4"		FTG. - TOP TRANSV.
1P804	16	41'-4"		FTG. - BOTTOM LONGIT.
1P1105E	66	13'-6"		FTG. - DOWELS
1P1106E	4	13'-7"		FTG. - DOWELS
1P1107E	4	13'-7"		FTG. - DOWELS
1P1108E	4	13'-7"		FTG. - DOWELS
1P1109E	4	13'-7"		FTG. - DOWELS
1P1110E	4	13'-7"		FTG. - DOWELS
1P1011E	86	27'-10"		COLUMN - VERTICAL
1P512E	44	16'-4"		COLUMN - HORZ.
1P513E	44	12'-9"		COLUMN - END TIES
1P514E	154	5'-0"		COLUMN - TIES
1P615E	8	30'-11"		CAP - LONGIT.
1P916E	2	33'-4"		CAP - LONGIT.
1P917E	2	49'-5"		CAP - LONGIT.
1P918E	10	55'-8"		CAP - LONGIT.
1P1119E	15	55'-8"		CAP - LONGIT.
1P1120E	5	61'-4"		CAP - LONGIT.
1P621E	12	14'-1"		CAP - END TIES
1P622E	2	13'-2"		CAP - END TIES
1P623E	36	Ⓐ		CAP - STIRRUPS
1P624E	88	Ⓑ		CAP - STIRRUPS
1P625E	20	20'-9"		CAP - STIRRUPS
1P526E	8	5'-9"		CAP - VERTICAL
1P427E	216	5'-8"		CAP - TIES
1P628E	72	6'-8"		CAP - CLOSURE BARS
1P429E	10	4'-2"		PEDESTAL - TIES
1P430E	20	5'-11"		PEDESTAL - TIES
1P431E	10	6'-5"		PEDESTAL - TIES
1P432E	24	3'-2"		PEDESTAL - TIES
1P433E	18	4'-10"		PEDESTAL - TIES

Ⓐ 4 SERIES OF 9 BARS - 16'-1" TO 18'-1"
Ⓑ 4 SERIES OF 20 BARS - 18'-3" TO 20'-9"

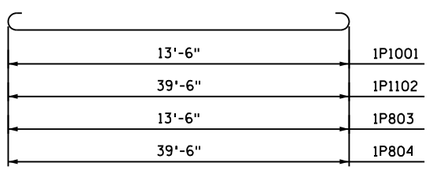

1P1001, 1P1102, 1P803 & 1P804

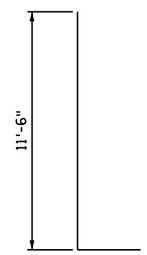

1P1105E

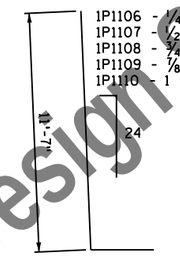

1P1106E, 1P1107E, 1P1108E, 1P1109E & 1P1110E

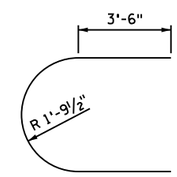

1P513E

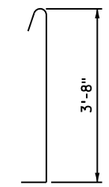

1P514E

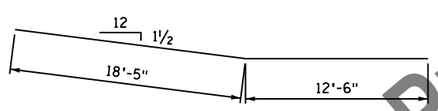

1P615E

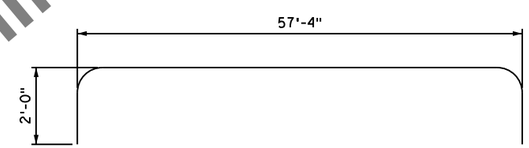

1P1120E

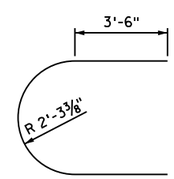

1P621E

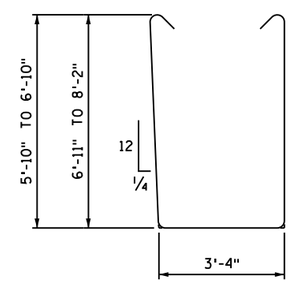

1P623E & 1P624E

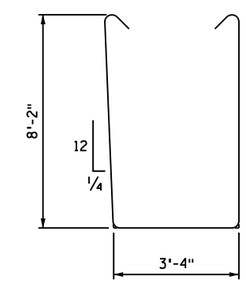

1P625E

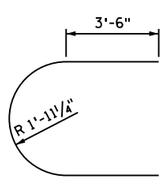

1P622E

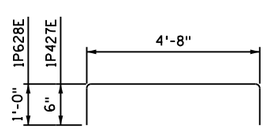

1P427E, 1P628E

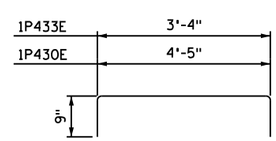

1P430E, 1P433E

Preliminary Design Subject to Change

NO	DATE	BY	CHK	REVISIONS

I HEREBY CERTIFY THAT THIS PLAN WAS PREPARED BY ME OR UNDER MY DIRECT SUPERVISION AND THAT I AM A DULY LICENSED PROFESSIONAL ENGINEER UNDER THE LAWS OF THE STATE OF MINNESOTA.

LICENSED PROFESSIONAL ENGINEER: CARL OSBERG
DATE: 8/12/2016 REG NO: 42732

WSB & Associates, Inc.
701 Xenia Avenue South, Suite 300
Minneapolis, MN 55416
www.wsbeng.com
763-541-4800 - Fax 763-541-1700
INFRASTRUCTURE • ENGINEERING • PLANNING • CONSTRUCTION

BLUE EARTH COUNTY
MINNESOTA PROJ. NO. STP SM
STATE PROJECT NO. 0704-07051

TITLE: PIER 1 REINFORCEMENT

DES: JH | DR: SWH | APPROVED:
CHK: CBO | CHK: CBO

Bridge No. 07051

7/28/2016 10:35:37 AM
K:\03265-000\Cad\Plan\cbr-0705l_6pier1.dgn

PIER 2 REQUIRED NOMINAL PILE BEARING RESISTANCE FOR C.I.P. PILES R_n - TONS/PILE		
FIELD CONTROL METHOD	Φ dyn	* R_n
MN/DOT PILE FORMULA 2012 (MPF12) $R_n = 20\sqrt{\frac{W \times H}{1000}} \times \log(\frac{10}{S})$	0.50	258.2
PDA	0.65	198.6

* R_n = (FACTORED DESIGN LOAD) / Φ dyn

PIER 2 COMPUTED PILE LOAD - TONS/PILE	
	PIER 2
FACTORED DEAD LOAD	71.2
FACTORED OVERTURNING	35.4
FACTORED DOWNDRAG	49.5
*** FACTORED DEAD LOAD + OVERTURNING + DOWNDRAG	156.1

*** BASED ON STRENGTH 1 LOAD COMBINATION, NOT INCLUDING TRANSIENT LOADS. ONLY USED FOR COMPARISON WITH FACTORED STRUCTURAL RESISTANCE. NOT TO BE USED FOR DRIVING.

PIER 2 COMPUTED PILE LOAD - TONS/PILE	
	PIER 2
FACTORED DEAD LOAD	71.2
FACTORED LIVE LOAD	22.5
FACTORED OVERTURNING	35.4
** FACTORED DESIGN LOAD	129.1

** BASED ON STRENGTH 1 LOAD COMBINATION.

SUMMARY OF QUANTITIES - PIER 2		
STRUCTURAL CONCRETE (1G52)	94	CU. YD.
STRUCTURAL CONCRETE (3B52)	154	CU. YD.
REINFORCEMENT BARS	11590	POUND
REINFORCEMENT BARS (EPOXY COATED)	33770	POUND
C-I-P CONCRETE TEST PILE 75 FT. LONG 16"	1	EACH
C-I-P CONCRETE PILING 16"	1365	LIN. FT.
STRUCTURE EXCAVATION	1	LUMP SUM
FOUNDATION PREPARATION PIER 2	1	LUMP SUM
PILE REDRIVING	1	EACH

PILE NOTES

1 C-I-P CONCRETE TEST PILES 75 FT. LONG
21 C-I-P CONCRETE PILES EST. LENGTH 65 FT.
22 C-I-P CONCRETE PILES REQ'D FOR PIER 2

PILE SPACING SHOWN IS AT BOTTOM OF FOOTING.

PILES MARKED ⊖► THUS TO BE BATTERED 2" PER FOOT IN THE DIRECTION SHOWN.

PILES TO HAVE A NOMINAL DIAMETER OF 16" AND A WALL THICKNESS OF 5/16".

FOR PILE SPLICE DETAILS SEE DETAIL B201.

PILE CUTOFF IS EL. 952.50

PILES TO BE DRIVEN TO A MINIMUM TIP ELEVATION OF 925.00

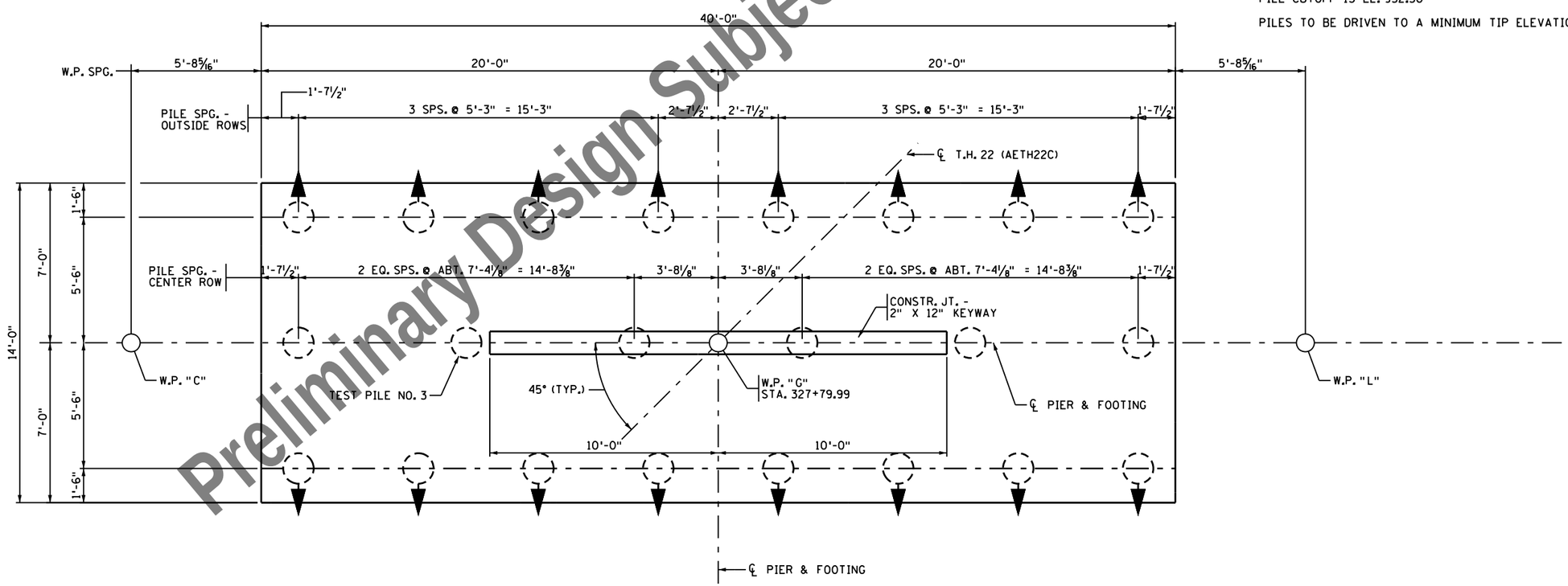

FOOTING - PLAN VIEW

Preliminary Design Subject to Change

NO	DATE	BY	CHK	REVISIONS

I HEREBY CERTIFY THAT THIS PLAN WAS PREPARED BY ME OR UNDER MY DIRECT SUPERVISION AND THAT I AM A DULY LICENSED PROFESSIONAL ENGINEER UNDER THE LAWS OF THE STATE OF MINNESOTA.

LICENSED PROFESSIONAL ENGINEER: CARL OSBERG
DATE: 8/12/2016 REG NO: 42732

WSB & Associates, Inc.
701 Xenia Avenue South, Suite 300
Minneapolis, MN 55416
www.wsbeng.com
763-541-4800 - Fax 763-541-1700
INFRASTRUCTURE • ENGINEERING • PLANNING • CONSTRUCTION

BLUE EARTH COUNTY
MINNESOTA PROJ. NO. STP SM
STATE PROJECT NO. 0704-07051

TITLE: PIER 2 DETAILS

DES: JH	DR: DJV	APPROVED:
CHK: CBO	CHK: CBO	

Sheet 30 of 54 Sheets

Bridge No. 07051

7/28/2016 10:35:37 AM
K:\03265-000\Cad\Plan\cbr-07051_2pier2.dgn

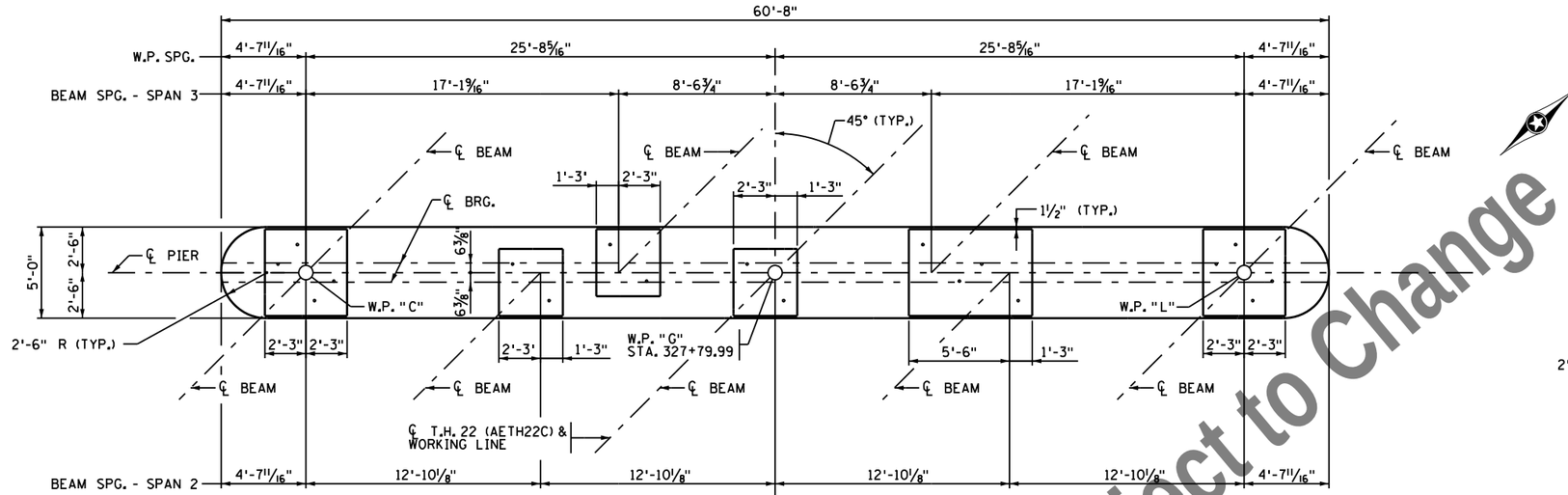

PLAN VIEW

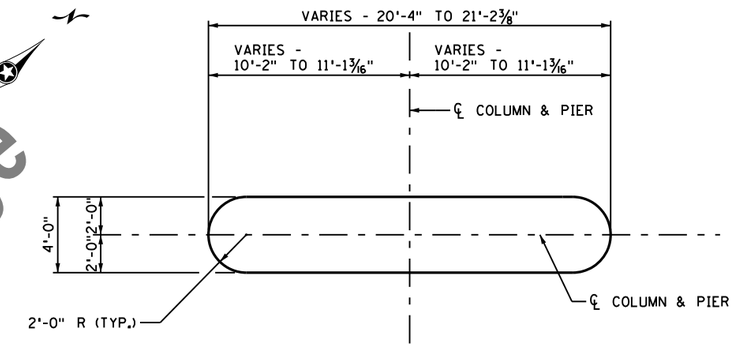

SECTION A-A

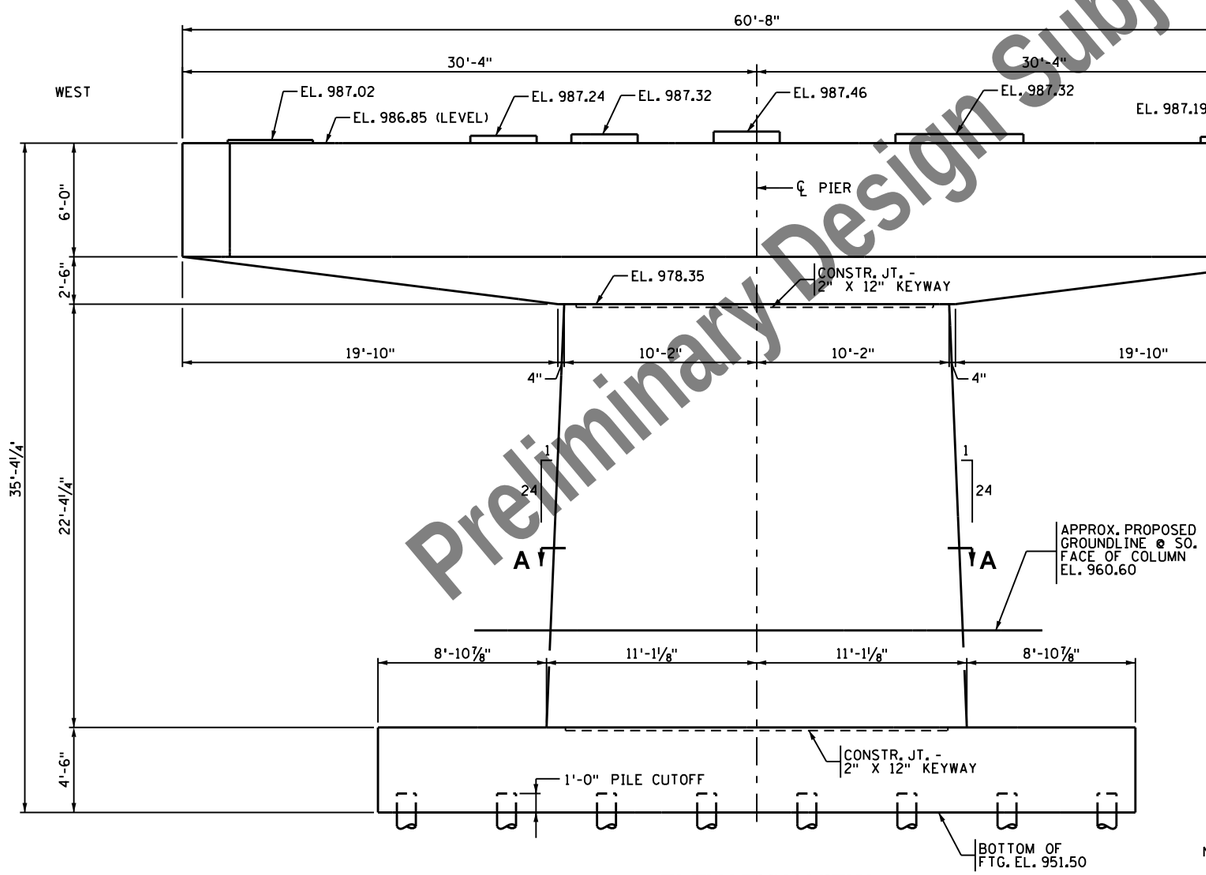

ELEVATION VIEW

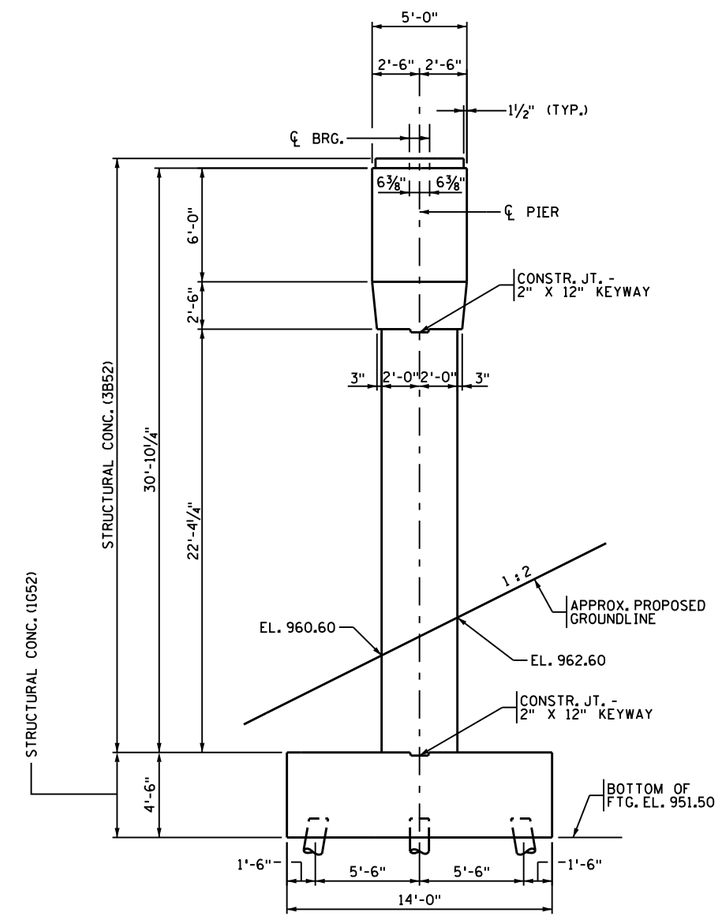

END VIEW

NOTE:
SEE FRAMING PLAN FOR BEAM SPG. PERPENDICULAR TO ℄ BEAMS FOR EACH SPAN.

Preliminary Design Subject to Change

NO	DATE	BY	CHK	REVISIONS

I HEREBY CERTIFY THAT THIS PLAN WAS PREPARED BY ME OR UNDER MY DIRECT SUPERVISION AND THAT I AM A DULY LICENSED PROFESSIONAL ENGINEER UNDER THE LAWS OF THE STATE OF MINNESOTA.

LICENSED PROFESSIONAL ENGINEER: CARL OSBERG
DATE: 8/12/2016 REG NO: 42732

WSB & Associates, Inc.
701 Xenia Avenue South, Suite 300
Minneapolis, MN 55416
www.wsbeng.com
763-541-4800 - Fax 763-541-1700
INFRASTRUCTURE • ENGINEERING • PLANNING • CONSTRUCTION

BLUE EARTH COUNTY
MINNESOTA PROJ. NO. STP SM
STATE PROJECT NO. 0704-07051

TITLE: **PIER 2 DETAILS**

DES: JH	DR: DJV	APPROVED:
CHK: CBO	CHK: CBO	

Sheet 31 of 54 Sheets

Bridge No. 07051

7/28/2016 10:35:38 AM
K:\03265-000\Cad\Plan\cbr0705l_pier2.dgn

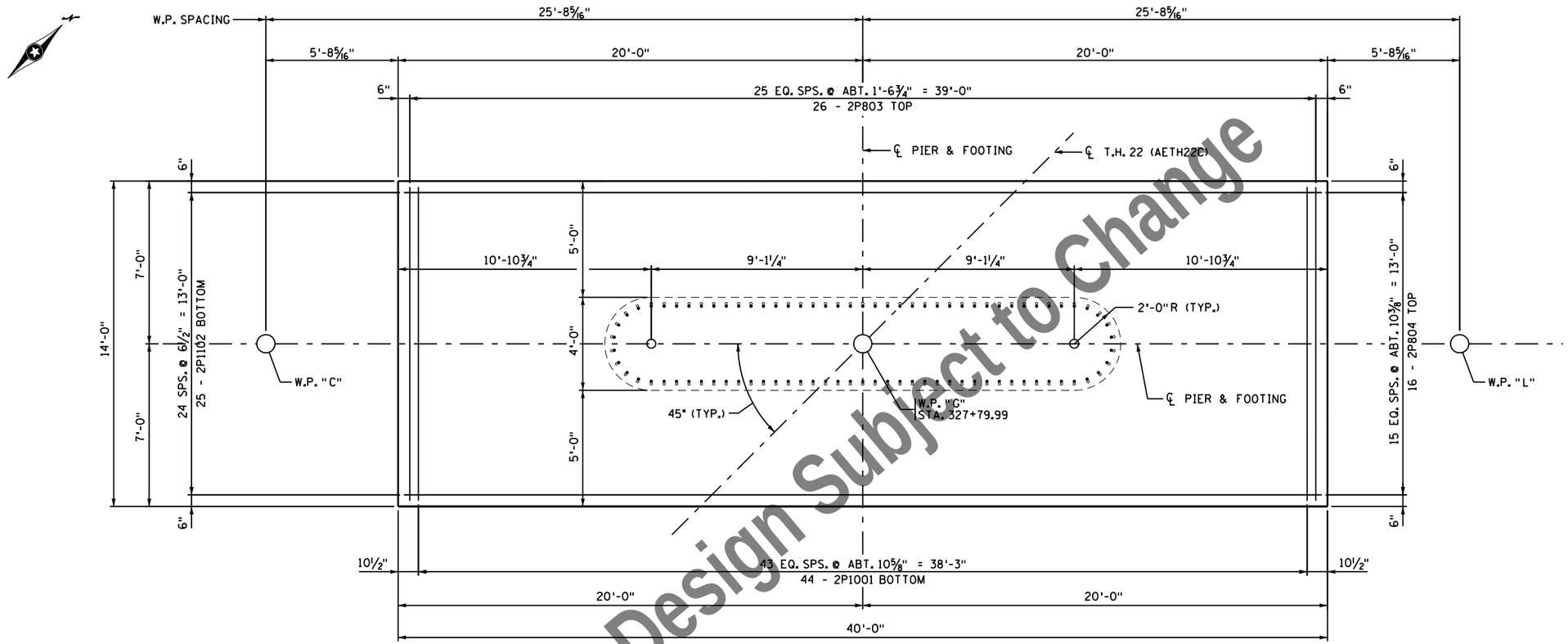

FOOTING REINFORCEMENT

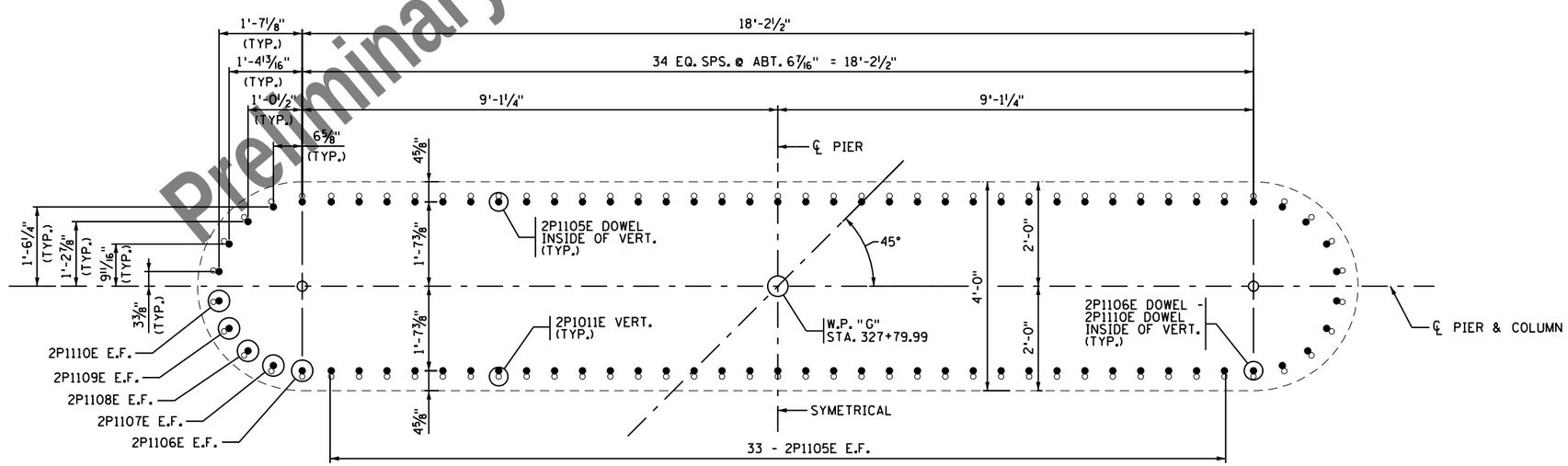

FOOTING DOWEL LAYOUT

DIMENSIONS ARE AT TOP OF FOOTING

Preliminary Design Subject to Change

NO	DATE	BY	CHK	REVISIONS

I HEREBY CERTIFY THAT THIS PLAN WAS PREPARED BY ME OR UNDER MY DIRECT SUPERVISION AND THAT I AM A DULY LICENSED PROFESSIONAL ENGINEER UNDER THE LAWS OF THE STATE OF MINNESOTA.

LICENSED PROFESSIONAL ENGINEER: CARL OSBERG
DATE: 8/12/2016 REG NO: 42732

WSB & Associates, Inc.
701 Xenia Avenue South, Suite 300
Minneapolis, MN 55416
www.wsbeng.com
763-541-4800 - Fax 763-541-1700
INFRASTRUCTURE • ENGINEERING • PLANNING • CONSTRUCTION

BLUE EARTH COUNTY
MINNESOTA PROJ. NO. STP SM
STATE PROJECT NO. 0704-07051

TITLE: PIER 2 REINFORCEMENT

DES: JH	DR: SWH	APPROVED:	Bridge No. 07051
CHK: CBO	CHK: CBO		
Sheet 32 of 54 Sheets			

7/28/2016 10:35:38 AM
K:\03265-000\Cad\Plan\cbr07051_3pier2.dgn

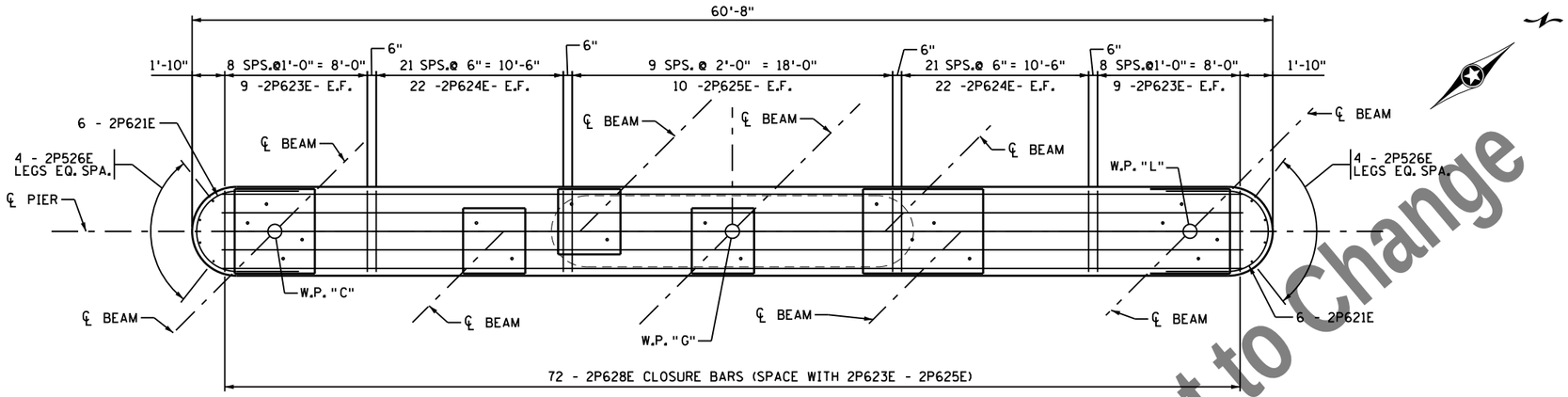

PLAN VIEW

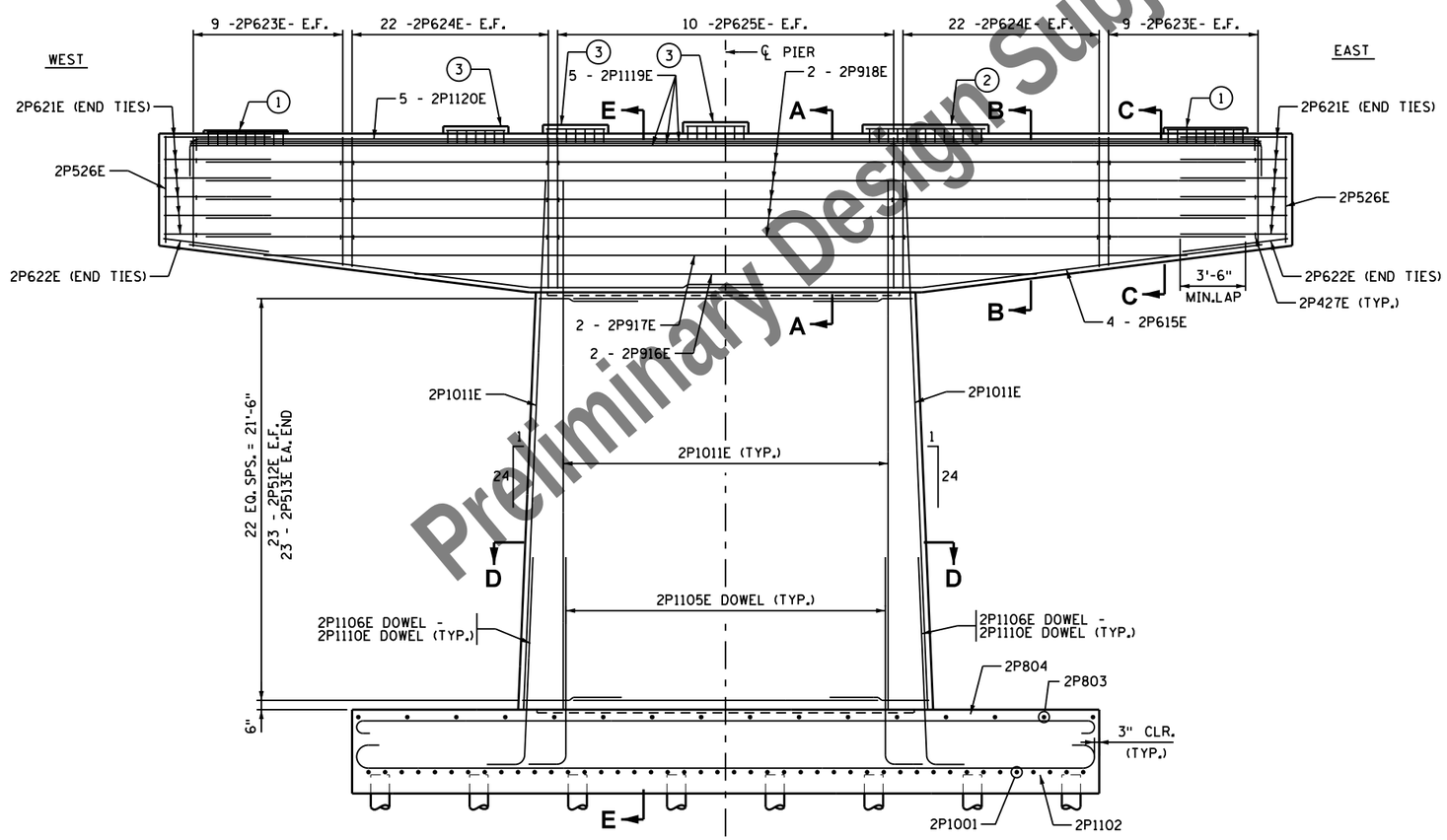

ELEVATION VIEW

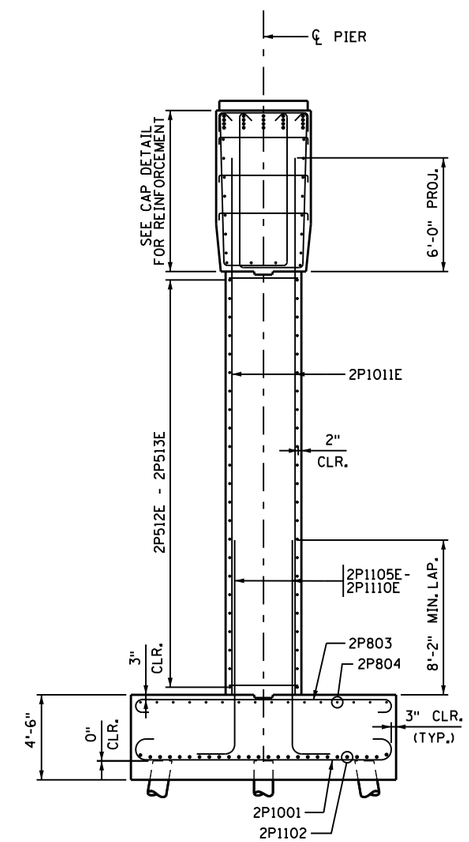

SECTION E-E

NOTES:

SEE SHEET 34 FOR SECTION A-A, SECTION B-B, SECTION C-C AND SECTION D-D.

1. SEE SHEET 35 FOR PEDESTAL TYPE "A" DETAIL.
2. SEE SHEET 35 FOR PEDESTAL TYPE "B" DETAIL.
3. SEE SHEET 35 FOR PEDESTAL TYPE "C" DETAIL.

Preliminary Design Subject to Change

NO	DATE	BY	CHK	REVISIONS

I HEREBY CERTIFY THAT THIS PLAN WAS PREPARED BY ME OR UNDER MY DIRECT SUPERVISION AND THAT I AM A DULY LICENSED PROFESSIONAL ENGINEER UNDER THE LAWS OF THE STATE OF MINNESOTA.

LICENSED PROFESSIONAL ENGINEER: CARL OSBERG
DATE: 8/12/2016 REG NO: 42732

WSB & Associates, Inc.
701 Xenia Avenue South, Suite 300
Minneapolis, MN 55416
www.wsbeng.com
763-541-4800 - Fax 763-541-1700
INFRASTRUCTURE • ENGINEERING • PLANNING • CONSTRUCTION

BLUE EARTH COUNTY
MINNESOTA PROJ. NO. STP SM
STATE PROJECT NO. 0704-07051

TITLE: PIER 2 REINFORCEMENT

DES: JH	DR: DJV	APPROVED:
CHK: CBO	CHK: CBO	

Sheet 33 of 54 Sheets

Bridge No. 07051

7/28/2016 10:35:39 AM
K:\03265-000\CadV\Pan\cbr07051_4pier2.dgn

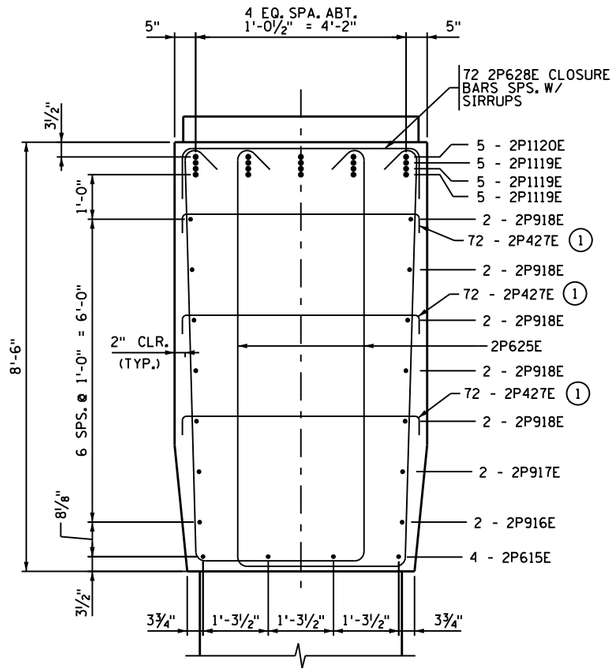

SECTION A-A

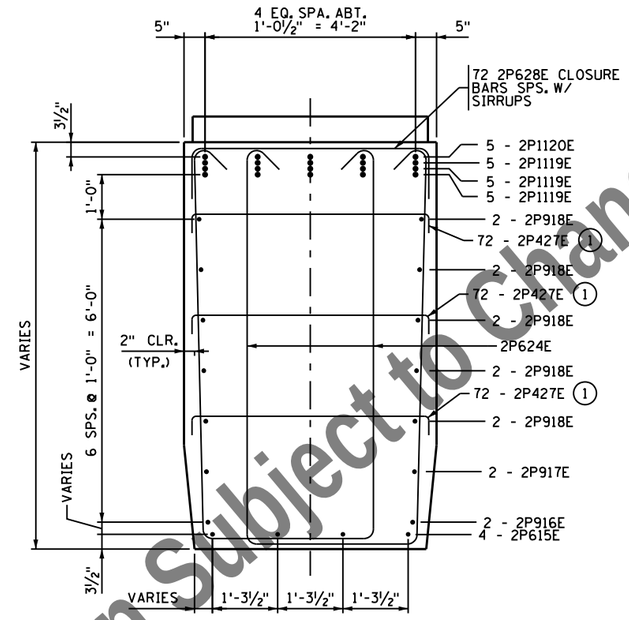

SECTION B-B

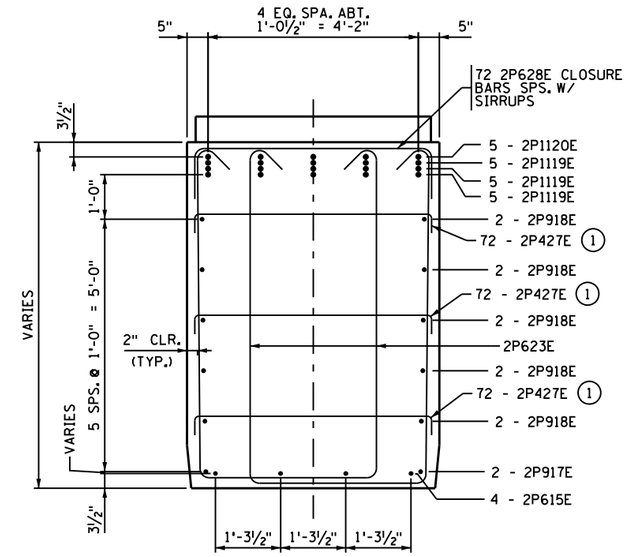

SECTION C-C

NOTES:

(1) - SPACE WITH 2P623E - 2P625E STURRUP BARS.

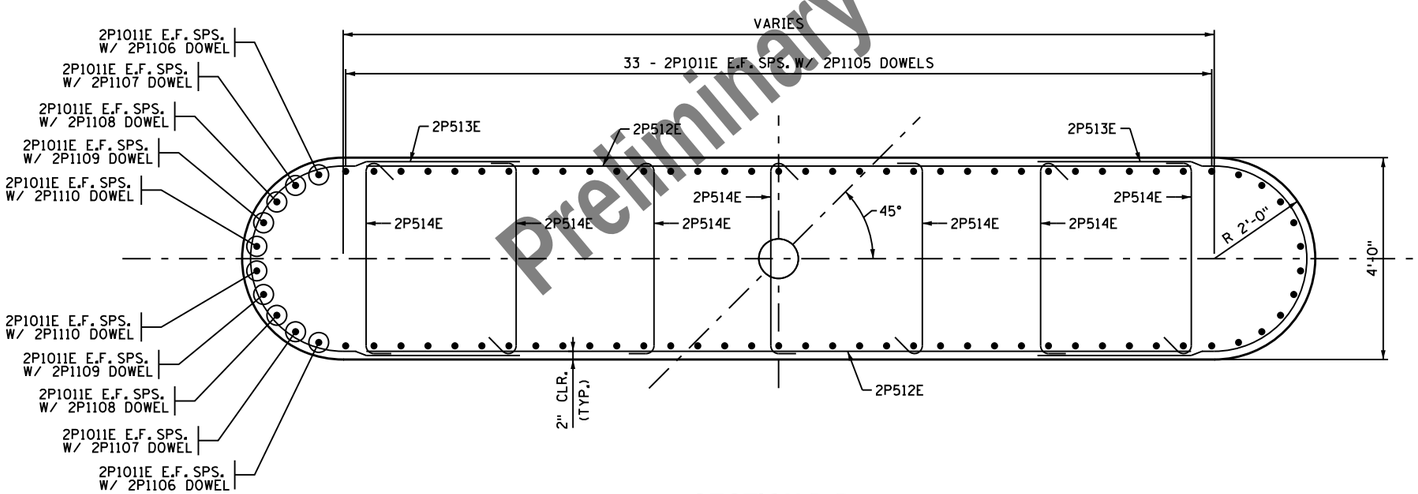

SECTION D-D

Preliminary Design Subject to Change

NO	DATE	BY	CHK	REVISIONS

I HEREBY CERTIFY THAT THIS PLAN WAS PREPARED BY ME OR UNDER MY DIRECT SUPERVISION AND THAT I AM A DULY LICENSED PROFESSIONAL ENGINEER UNDER THE LAWS OF THE STATE OF MINNESOTA.

LICENSED PROFESSIONAL ENGINEER: CARL OSBERG
DATE: 8/12/2016 REG NO: 42732

WSB & Associates, Inc.
701 Xenia Avenue South, Suite 300
Minneapolis, MN 55416
www.wsbeng.com
763-541-4800 - Fax 763-541-1700
INFRASTRUCTURE • ENGINEERING • PLANNING • CONSTRUCTION

BLUE EARTH COUNTY
MINNESOTA PROJ. NO. STP SM
STATE PROJECT NO. 0704-07051

TITLE: PIER 2 REINFORCEMENT

DES: JH	DR: DJV	APPROVED:
CHK: CBO	CHK: CBO	

Sheet 34 of 54 Sheets

Bridge No. 07051

7/28/2016 10:35:39 AM
K:\03265-000\CadPlan\cbr0705i_5pier2.dgn

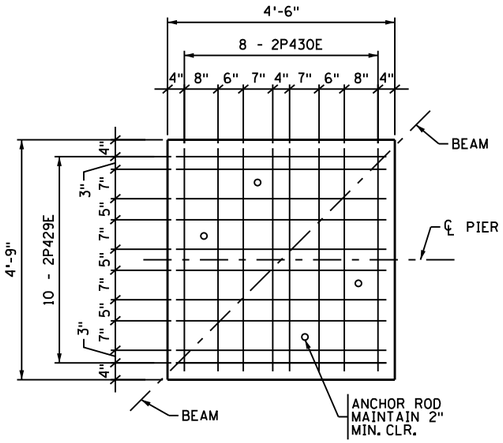

PEDESTAL TYPE "A" PLAN VIEW

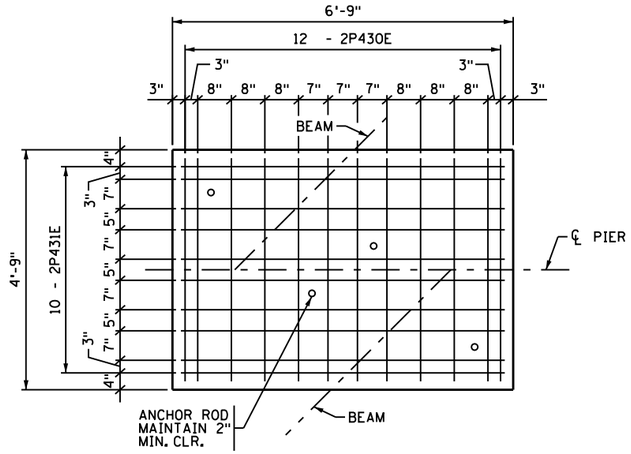

PEDESTAL TYPE "B" PLAN VIEW

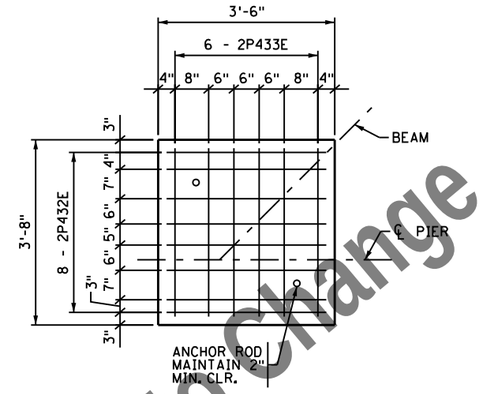

PEDESTAL TYPE "C" PLAN VIEW

PIER 2 - BILL OF REINFORCEMENT

BAR MARK	NUMBER	LENGTH	SHAPE	LOCATION
2P1001	44	16'-4"		FTG. - BOTTOM TRANSV.
2P1102	25	42'-8"		FTG. - BOTTOM LONGIT.
2P803	26	15'-4"		FTG. - TOP TRANSV.
2P804	16	41'-4"		FTG. - BOTTOM LONGIT.
2P1105E	66	13'-6"		FTG. - DOWELS
2P1106E	4	13'-7"		FTG. - DOWELS
2P1107E	4	13'-7"		FTG. - DOWELS
2P1108E	4	13'-7"		FTG. - DOWELS
2P1109E	4	13'-7"		FTG. - DOWELS
2P1110E	4	13'-7"		FTG. - DOWELS
2P1011E	86	28'-4"		COLUMN - VERTICAL
2P512E	44	16'-4"		COLUMN - HORZ.
2P513E	44	12'-9"		COLUMN - END TIES
2P514E	154	5'-0"		COLUMN - TIES
2P615E	8	30'-11"		CAP - LONGIT.
2P916E	2	33'-4"		CAP - LONGIT.
2P917E	2	49'-5"		CAP - LONGIT.
2P918E	10	55'-8"		CAP - LONGIT.
2P1119E	15	55'-8"		CAP - LONGIT.
2P1120E	5	61'-4"		CAP - LONGIT.
2P621E	12	14'-1"		CAP - END TIES
2P622E	2	13'-2"		CAP - END TIES
2P623E	36	Ⓐ		CAP - STIRRUPS
2P624E	88	Ⓑ		CAP - STIRRUPS
2P625E	20	20'-9"		CAP - STIRRUPS
2P526E	8	5'-9"		CAP - VERTICAL
2P427E	216	5'-8"		CAP - TIES
2P628E	72	6'-8"		CAP - CLOSURE BARS
2P429E	10	4'-2"		PEDESTAL - TIES
2P430E	20	5'-11"		PEDESTAL - TIES
2P431E	10	6'-5"		PEDESTAL - TIES
2P432E	24	3'-2"		PEDESTAL - TIES
2P433E	18	4'-10"		PEDESTAL - TIES

Ⓐ 4 SERIES OF 9 BARS - 16'-1" TO 18'-1"
Ⓑ 4 SERIES OF 20 BARS - 18'-3" TO 20'-9"

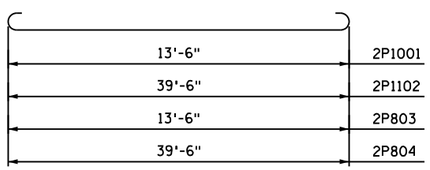

2P1001, 2P1102, 2P803 & 2P804

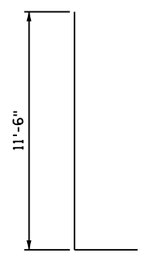

2P1105E

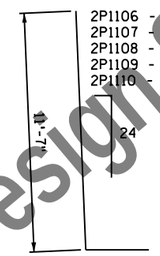

2P1106E, 2P1107E, 2P1108E, 2P1109E & 2P1110E

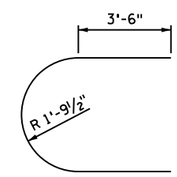

2P513E

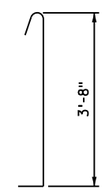

2P514E

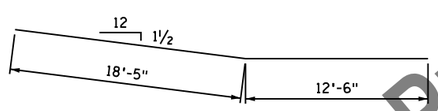

2P615E

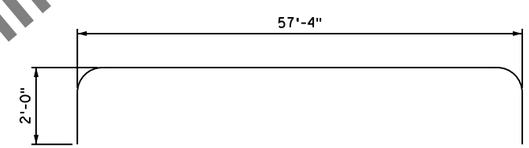

2P1120E

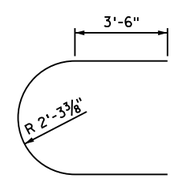

2P621E

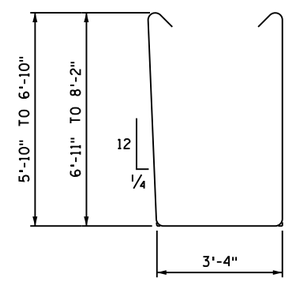

2P623E & 2P624E

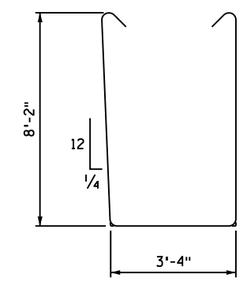

2P625E

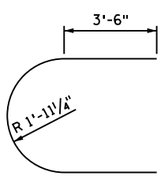

2P622E

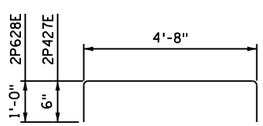

2P427E, 2P628E

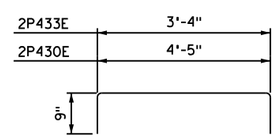

2P430E, 2P433E

Preliminary Design Subject to Change

NO	DATE	BY	CHK	REVISIONS

I HEREBY CERTIFY THAT THIS PLAN WAS PREPARED BY ME OR UNDER MY DIRECT SUPERVISION AND THAT I AM A DULY LICENSED PROFESSIONAL ENGINEER UNDER THE LAWS OF THE STATE OF MINNESOTA.

LICENSED PROFESSIONAL ENGINEER: CARL OSBERG
DATE: 8/12/2016 REG NO: 42732

WSB & Associates, Inc.
701 Xenia Avenue South, Suite 300
Minneapolis, MN 55416
www.wsbeng.com
763-541-4800 - Fax 763-541-1700
INFRASTRUCTURE • ENGINEERING • PLANNING • CONSTRUCTION

BLUE EARTH COUNTY
MINNESOTA PROJ. NO. STP SM
STATE PROJECT NO. 0704-07051

TITLE: PIER 2 REINFORCEMENT

DES: JH	DR: DJV	APPROVED:
CHK: CBO	CHK: CBO	

Bridge No. 07051

7/28/2016 10:35:40 AM
K:\03265-000\Cad\Plan\cbr-0705l_6pier2.dgn

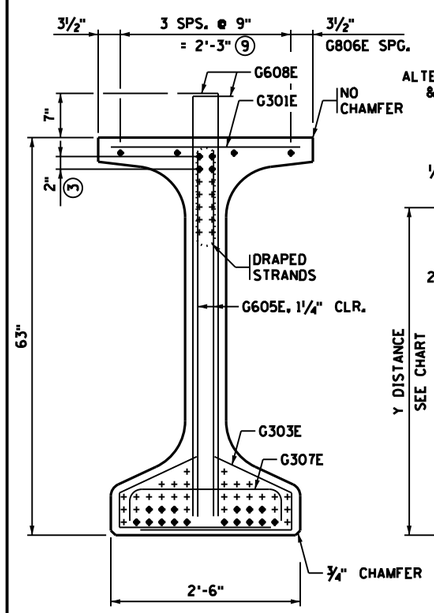

END VIEW

CUT STRANDS FLUSH WITH CONCRETE. COVER ENDS WITH SEALANT PER APPROVED PRODUCTS LIST "BRIDGE-PRESTRESSED BEAMS-CUT STRAND SEALANT."

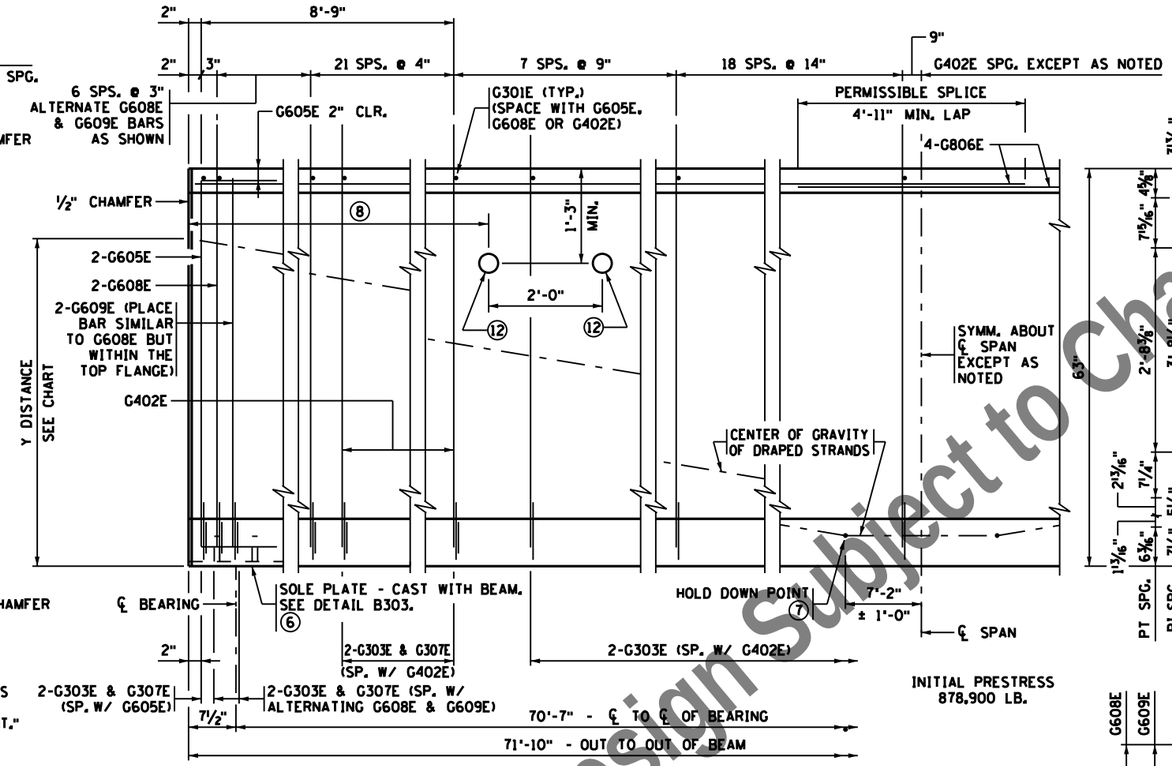

INITIAL PRESTRESS 878,900 LB.

BEAM ELEVATION

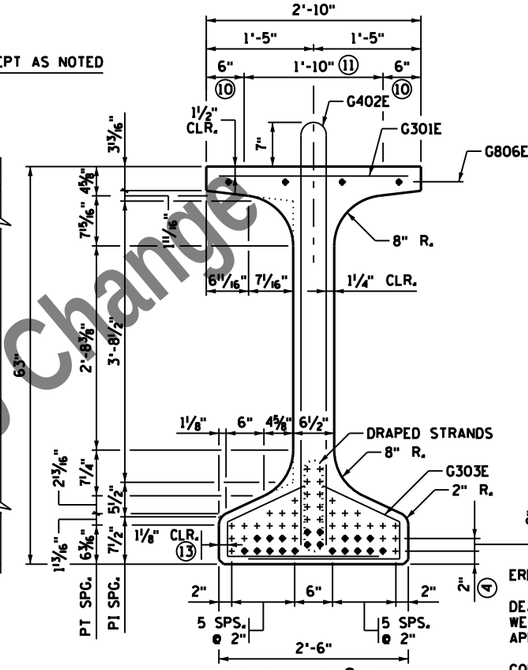

SECTION AT ℄ SPAN

Y DISTANCES (INCHES)			
	NO.	℄ SPAN	END
STRAIGHT STRANDS	16	2.75	
DRAPED STRANDS	4	4	59 ▫
⑤ TOTAL STRANDS	20	3	

Y = DISTANCE TO CENTER OF GRAVITY OF STRANDS FROM BOTTOM OF BEAM. ALL STRANDS SPACED 2" CENTER TO CENTER, HORIZONTALLY AND VERTICALLY, EXCEPT AS NOTED.

▫ A TOLERANCE OF ± 1" WILL BE PERMITTED IN THIS DIMENSION.

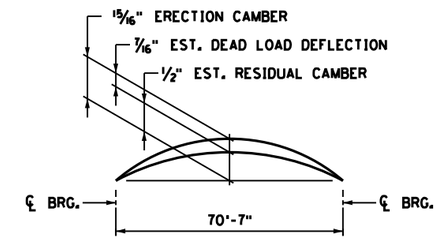

CAMBER DIAGRAM

ERECTION CAMBER SHOWN IS AFTER DIAPHRAGMS ARE IN PLACE.

DEAD LOAD DEFLECTION SHOWN IS FOR WEIGHT OF SLAB, WEARING COURSE, BARRIER, SIDEWALK AND MEDIAN WHERE APPLICABLE.

CONTRACTOR WILL TAKE ELEVATIONS AT TOP OF BEAMS AFTER ERECTION AND WILL ALLOW FOR DEFLECTION SHOWN TO ENABLE BUILDING FORMS TO CORRECT GRADE AND SPECIFIED SLAB THICKNESS. PROVIDE COPY OF ELEVATIONS TO THE ENGINEER.

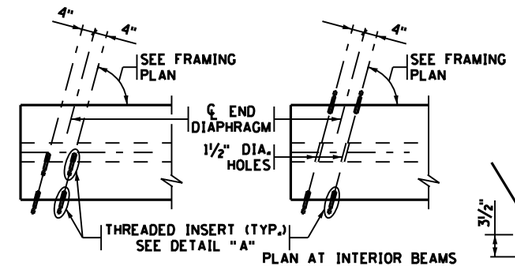

PLAN AT FASCIA BEAMS

PLAN AT INTERIOR BEAMS

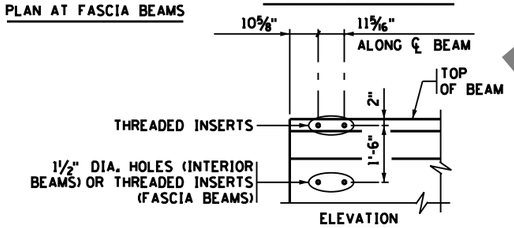

ELEVATION

CONCRETE END DIAPHRAGM

PARAPET ABUTMENT
(SEE DETAIL B814 FOR DIAPHRAGM DETAILS)

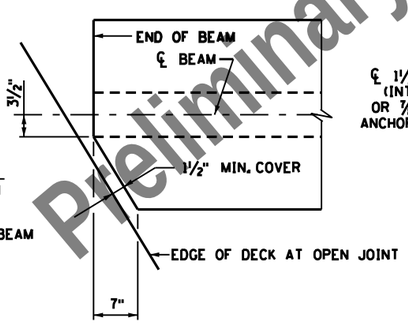

BEAM TOP FLANGE CHAMFER

(ABUTMENT END ONLY)

CALCULATED PRESTRESS LOSSES	
ELASTIC SHORTENING LOSS	12.19 KSI
LONG TERM LOSSES	15.46 KSI
TOTAL LOSSES	27.65 KSI

MINIMUM CONCRETE STRENGTH - K.S.I.	
① f'ci	② f'c
7.5 KSI	9.0 KSI

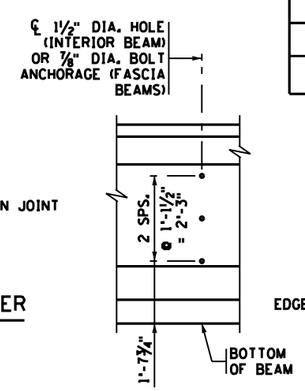

ELEVATION

STEEL INTERMEDIATE DIAPHRAGM

(SEE DETAIL B403 FOR DIAPHRAGM DETAILS)

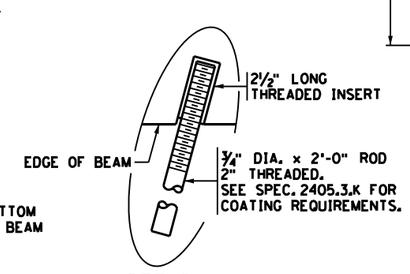

DETAIL "A"

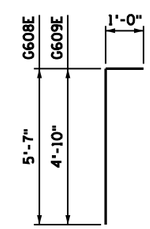

G608E & G609E

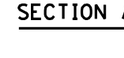

G301E

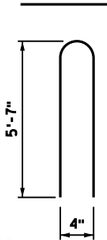

G402E

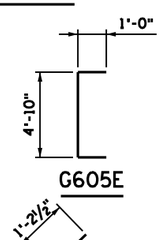

G605E

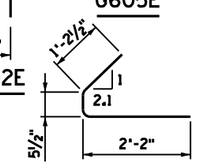

G303E

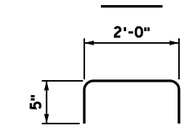

G307E

GENERAL NOTES

PROVIDE HANDLING HOOKS OR DEVICES AS REQUIRED BY CONTRACTOR.

MARK EACH BEAM SHOWING BRIDGE NUMBER, CASTING DATE, AND INDIVIDUAL IDENTIFICATION LETTERS AND NUMBERS ON THE FACE OF THE BEAM, NEAR THE END, SO LOCATED THAT THEY WILL BE EXPOSED AFTER THE END DIAPHRAGMS HAVE BEEN CAST. MARK FASCIA BEAMS ON THE INSIDE FACE. ENSURE ALL MARKINGS ARE STENCILLED AND CLEARLY LEGIBLE. FOR LOCATION OF BEAMS, SEE FRAMING PLAN.

ALL MATERIAL AND WORK SHOWN OR NOTED ON THIS SHEET IS INCLUDED IN UNIT PRICE BID FOR PRESTRESSED CONCRETE BEAMS. SEE SPEC. 2405.

SEE FRAMING PLAN FOR BEAM END MARKED "X" AND DIAPHRAGM SPACING.

AS AN ALTERNATE TO THE END DIAPHRAGM ANCHORAGES SHOWN, THE CONTRACTOR MAY SUBMIT DETAILS OF A CAST-IN-PLACE ANCHORAGE TO THE ENGINEER FOR APPROVAL. ANCHORAGE MUST PROVIDE AN ULTIMATE PULL OUT STRENGTH OF 15 KIPS PER ANCHORAGE.

APPLY AN APPROVED SEALER TO THE SIDES OF THE BEAM NEAR EACH END PER THE SPECIAL PROVISIONS.

① MINIMUM CONCRETE STRENGTH AT TIME OF PRESTRESS TRANSFER.

② MINIMUM CONCRETE STRENGTH WHEN BEAM CAN BE TRANSPORTED AND INSTALLED.

③ DRAPED STRANDS.

④ STRAIGHT STRANDS.

⑤ USE 0.6" DIA. 7-WIRE LOW RELAXATION PRESTRESSING STRAND, CONFORMING TO ASTM A416, GRADE 270.

⑥ FOR INTEGRAL ABUTMENT, SOLE PLATE CAN BE ELIMINATED OR REPLACED WITH AN APPROVED PROTECTION PLATE. BEAMS DETAILED TO INCLUDE A TAPERED PLATE PER STANDARD FIGURE B309 MUST INCLUDE SOLE PLATE.

⑦ CENTER OF GRAVITY OF HOLD DOWNS WHEN MULTIPLE HOLD DOWNS ARE USED.

⑧ DIMENSION DETERMINED BY CONTRACTOR. MAINTAIN 2" MINIMUM CLEAR FROM STRANDS.

⑨ TWO INSIDE BARS MAY BE PLACED ADJACENT TO VERTICAL STIRRUP FOR TYING CONVENIENCE.

⑩ STEEL TROWEL TO SMOOTH FINISH AND APPLY BOND BREAKER PER APPROVED PRODUCTS LIST.

⑪ ROUGH FLOAT AND BROOM TRANSVERSELY FOR BOND PER SPEC. 2405.3.D.

⑫ OPTIONAL: 3" MAX. DIA. SLEEVE FOR HAULING (AFTER INSTALLATION, COAT WITH APPROVED EPOXY BONDING AGENT & FILL WITH APPROVED NON-SHRINK GROUT).

⑬ TYP. CLR. FOR ENTIRE BOTTOM FLANGE.

BEAMS B1-B4 & B10-B13

FIG. 5-397.509 (MOD.)

REVISED: DECEMBER 02, 2015

APPROVED: JANUARY 13, 2015

Nancy Daubenberger
STATE BRIDGE ENGINEER

MODIFICATION :

CHAMFERED TOP FLANGE OF BEAM AT ABUTMENTS

NO	DATE	BY	CHK	REVISIONS

I HEREBY CERTIFY THAT THIS PLAN WAS PREPARED BY ME OR UNDER MY DIRECT SUPERVISION AND THAT I AM A DULY LICENSED PROFESSIONAL ENGINEER UNDER THE LAWS OF THE STATE OF MINNESOTA.

LICENSED PROFESSIONAL ENGINEER: CARL OSBERG

DATE: 8/12/2016 REG NO: 42732

WSB & Associates, Inc.
701 Xenia Avenue South, Suite 300
Minneapolis, MN 55416
www.wsbeng.com
763-541-4800 - Fax 763-541-1700
INFRASTRUCTURE • ENGINEERING • PLANNING • CONSTRUCTION

BLUE EARTH COUNTY
MINNESOTA PROJ. NO. STP SM
STATE PROJECT NO. 0704-07051

TITLE: MN63" PRESTRESSED CONCRETE BEAM (PRETENSIONED) MN63-72

DES: JH	DR: DJV	APPROVED:
CHK: CBO	CHK: CBO	

Sheet 36 of 54 Sheets

Bridge No. 07051

Preliminary Design Subject to Change

7/28/2016 10:35:40 AM
K:\03265-000\CadV\Plan\cbr07051_beam1.dgn

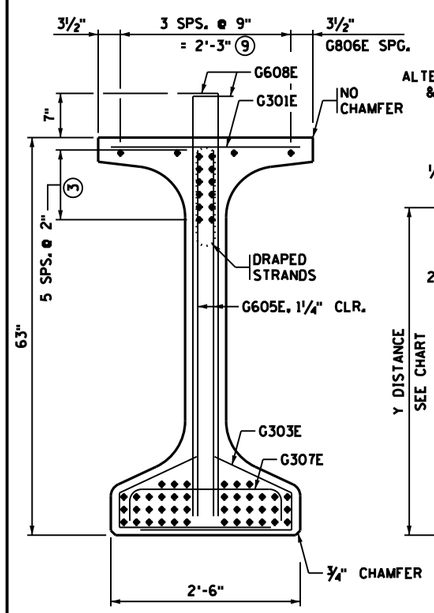

END VIEW

CUT STRANDS FLUSH WITH CONCRETE. COVER ENDS WITH SEALANT PER APPROVED PRODUCTS LIST "BRIDGE-PRESTRESSED BEAMS-CUT STRAND SEALANT."

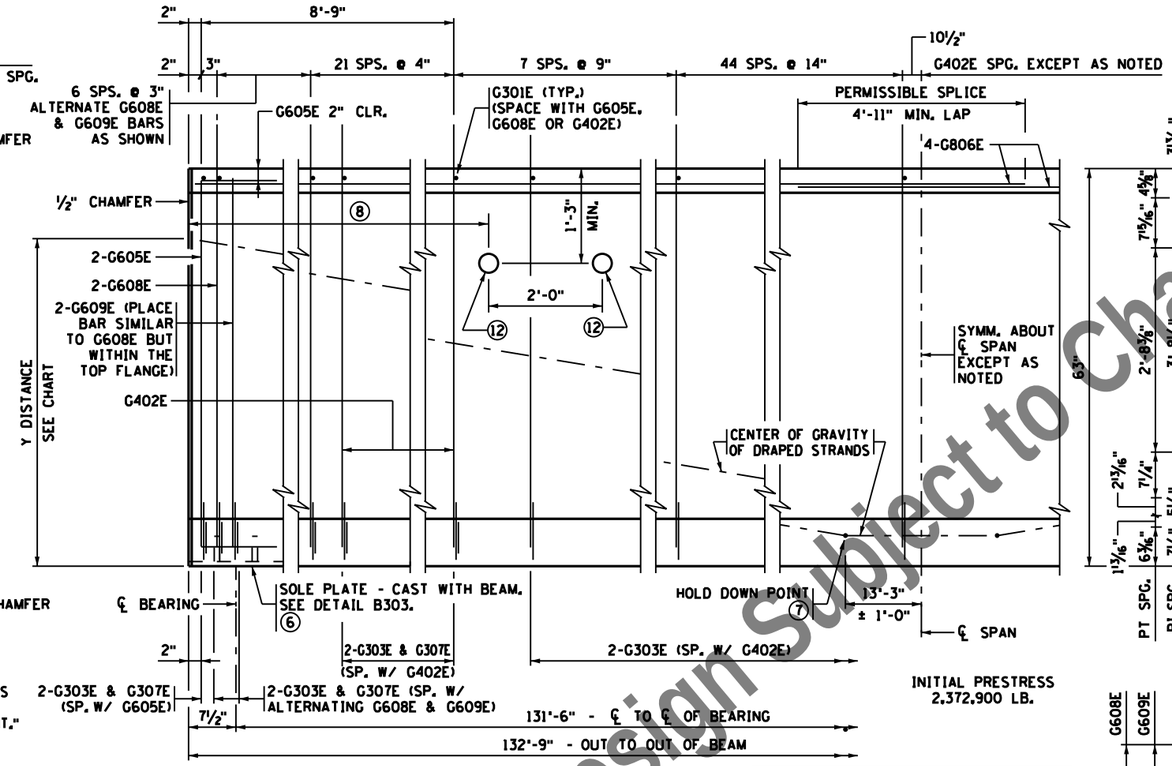

BEAM ELEVATION

INITIAL PRESTRESS 2,372,900 LB.

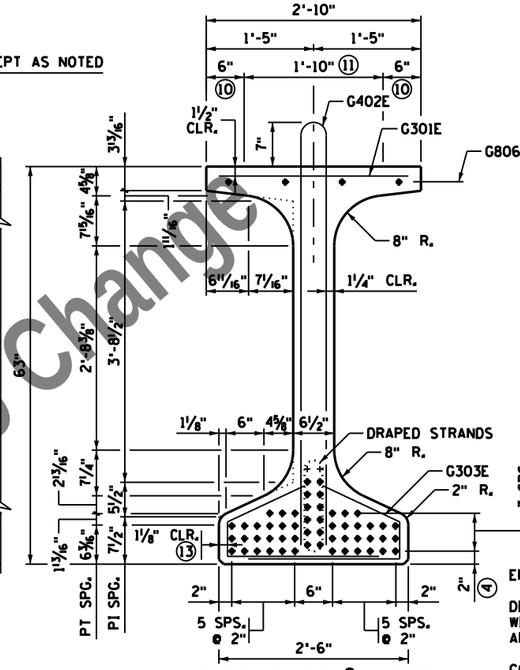

SECTION AT ℄ SPAN

Y DISTANCES (INCHES)			
	NO.	℄ SPAN	END
STRAIGHT STRANDS	42	4.57	
DRAPED STRANDS	12	8	55 ▫
⑤ TOTAL STRANDS	54	5.33	

Y = DISTANCE TO CENTER OF GRAVITY OF STRANDS FROM BOTTOM OF BEAM. ALL STRANDS SPACED 2" CENTER TO CENTER, HORIZONTALLY AND VERTICALLY, EXCEPT AS NOTED.

▫ A TOLERANCE OF ± 1" WILL BE PERMITTED IN THIS DIMENSION.

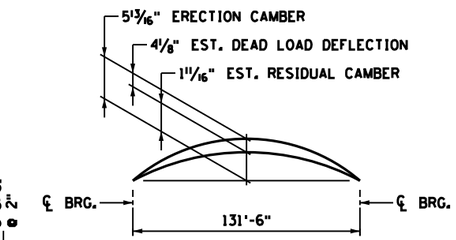

CAMBER DIAGRAM

ERECTION CAMBER SHOWN IS AFTER DIAPHRAGMS ARE IN PLACE.

DEAD LOAD DEFLECTION SHOWN IS FOR WEIGHT OF SLAB, WEARING COURSE, BARRIER, SIDEWALK AND MEDIAN WHERE APPLICABLE.

CONTRACTOR WILL TAKE ELEVATIONS AT TOP OF BEAMS AFTER ERECTION AND WILL ALLOW FOR DEFLECTION SHOWN TO ENABLE BUILDING FORMS TO CORRECT GRADE AND SPECIFIED SLAB THICKNESS. PROVIDE COPY OF ELEVATIONS TO THE ENGINEER.

CALCULATED PRESTRESS LOSSES	
ELASTIC SHORTENING LOSS	25.46 KSI
LONG TERM LOSSES	26.02 KSI
TOTAL LOSSES	51.48 KSI

MINIMUM CONCRETE STRENGTH - K.S.I.	
① f'ci	② f'c
7.5 KSI	9.0 KSI

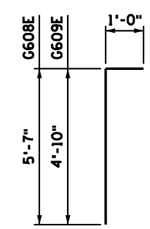

G608E & G609E

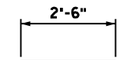

G301E

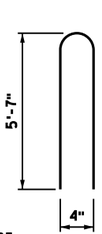

G402E

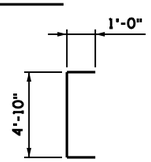

G605E

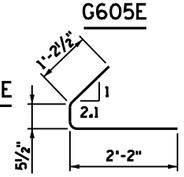

G303E

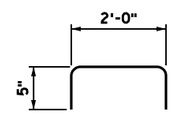

G307E

GENERAL NOTES

PROVIDE HANDLING HOOKS OR DEVICES AS REQUIRED BY CONTRACTOR.

MARK EACH BEAM SHOWING BRIDGE NUMBER, CASTING DATE, AND INDIVIDUAL IDENTIFICATION LETTERS AND NUMBERS ON THE FACE OF THE BEAM, NEAR THE END, SO LOCATED THAT THEY WILL BE EXPOSED AFTER THE END DIAPHRAGMS HAVE BEEN CAST. MARK FASCIA BEAMS ON THE INSIDE FACE. ENSURE ALL MARKINGS ARE STENCILLED AND CLEARLY LEGIBLE. FOR LOCATION OF BEAMS, SEE FRAMING PLAN.

ALL MATERIAL AND WORK SHOWN OR NOTED ON THIS SHEET IS INCLUDED IN UNIT PRICE BID FOR PRESTRESSED CONCRETE BEAMS. SEE SPEC. 2405.

SEE FRAMING PLAN FOR BEAM END MARKED "X" AND DIAPHRAGM SPACING.

AS AN ALTERNATE TO THE END DIAPHRAGM ANCHORAGES SHOWN, THE CONTRACTOR MAY SUBMIT DETAILS OF A CAST-IN-PLACE ANCHORAGE TO THE ENGINEER FOR APPROVAL. ANCHORAGE MUST PROVIDE AN ULTIMATE PULL OUT STRENGTH OF 15 KIPS PER ANCHORAGE.

APPLY AN APPROVED SEALER TO THE SIDES OF THE BEAM NEAR EACH END PER THE SPECIAL PROVISIONS.

① MINIMUM CONCRETE STRENGTH AT TIME OF PRESTRESS TRANSFER.

② MINIMUM CONCRETE STRENGTH WHEN BEAM CAN BE TRANSPORTED AND INSTALLED.

③ DRAPED STRANDS.

④ STRAIGHT STRANDS.

⑤ USE 0.6" DIA. 7-WIRE LOW RELAXATION PRESTRESSING STRAND, CONFORMING TO ASTM A416, GRADE 270.

⑥ FOR INTEGRAL ABUTMENT, SOLE PLATE CAN BE ELIMINATED OR REPLACED WITH AN APPROVED PROTECTION PLATE. BEAMS DETAILED TO INCLUDE A TAPERED PLATE PER STANDARD FIGURE B309 MUST INCLUDE SOLE PLATE.

⑦ CENTER OF GRAVITY OF HOLD DOWNS WHEN MULTIPLE HOLD DOWNS ARE USED.

⑧ DIMENSION DETERMINED BY CONTRACTOR. MAINTAIN 2" MINIMUM CLEAR FROM STRANDS.

⑨ TWO INSIDE BARS MAY BE PLACED ADJACENT TO VERTICAL STIRRUP FOR TYING CONVENIENCE.

⑩ STEEL TROWEL TO SMOOTH FINISH AND APPLY BOND BREAKER PER APPROVED PRODUCTS LIST.

⑪ ROUGH FLOAT AND BROOM TRANSVERSELY FOR BOND PER SPEC. 2405.3.D.

⑫ OPTIONAL: 3" MAX. DIA. SLEEVE FOR HAULING (AFTER INSTALLATION, COAT WITH APPROVED EPOXY BONDING AGENT & FILL WITH APPROVED NON-SHRINK GROUT).

⑬ TYP. CLR. FOR ENTIRE BOTTOM FLANGE.

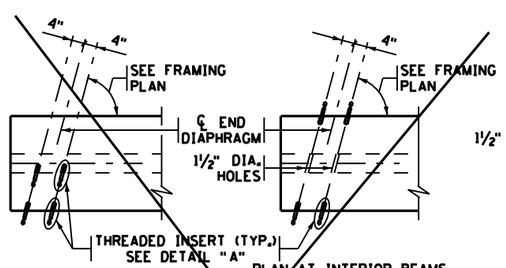

PLAN AT FASCIA BEAMS

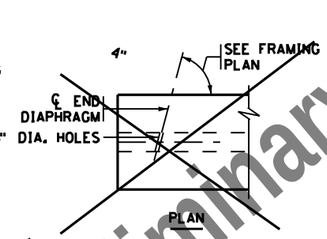

PLAN AT INTERIOR BEAMS

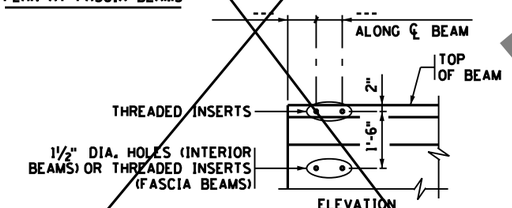

ELEVATION

CONCRETE END DIAPHRAGM

PARAPET ABUTMENT
(SEE DETAIL B814 FOR DIAPHRAGM DETAILS)

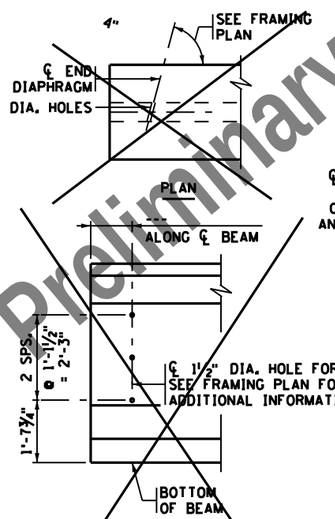

ELEVATION

CONCRETE END DIAPHRAGM

SEE SUPERSTRUCTURE DETAILS AND REINFORCEMENT FOR DIAPHRAGM DETAILS.

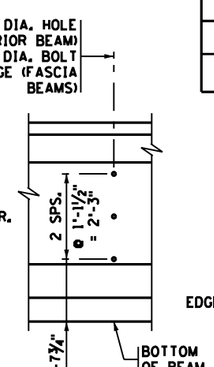

ELEVATION

STEEL INTERMEDIATE DIAPHRAGM

(SEE DETAIL B403 FOR DIAPHRAGM DETAILS)

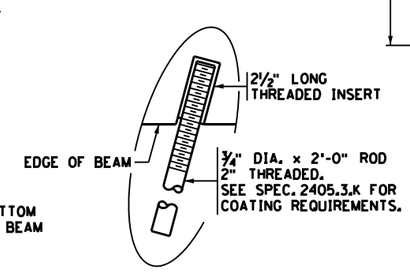

DETAIL "A"

Preliminary Design Subject to Change

REVISED: DECEMBER 02, 2015

APPROVED: JANUARY 13, 2015

Nancy Daubenberger
STATE BRIDGE ENGINEER

BEAMS B5 - B9

FIG. 5-397.509

NO	DATE	BY	CHK	REVISIONS

I HEREBY CERTIFY THAT THIS PLAN WAS PREPARED BY ME OR UNDER MY DIRECT SUPERVISION AND THAT I AM A DULY LICENSED PROFESSIONAL ENGINEER UNDER THE LAWS OF THE STATE OF MINNESOTA.

LICENSED PROFESSIONAL ENGINEER: CARL OSBERG
DATE: 8/12/2016 REG NO: 42732

WSB & Associates, Inc.
701 Xenia Avenue South, Suite 300
Minneapolis, MN 55416
www.wsberg.com
763-541-4800 - Fax 763-541-1700
INFRASTRUCTURE • ENGINEERING • PLANNING • CONSTRUCTION

BLUE EARTH COUNTY
MINNESOTA PROJ. NO. STP SM
STATE PROJECT NO. 0704-07051

TITLE: MN63" PRESTRESSED CONCRETE BEAM (PRETENSIONED) MN63-132

DES: JH	DR: DJV	APPROVED:
CHK: CBO	CHK: CBO	

Sheet 37 of 54 Sheets

Bridge No. 07051

7/28/2016 10:35:40 AM
K:\03265-000\CadVPlan\cbr07051_beam2.dgn

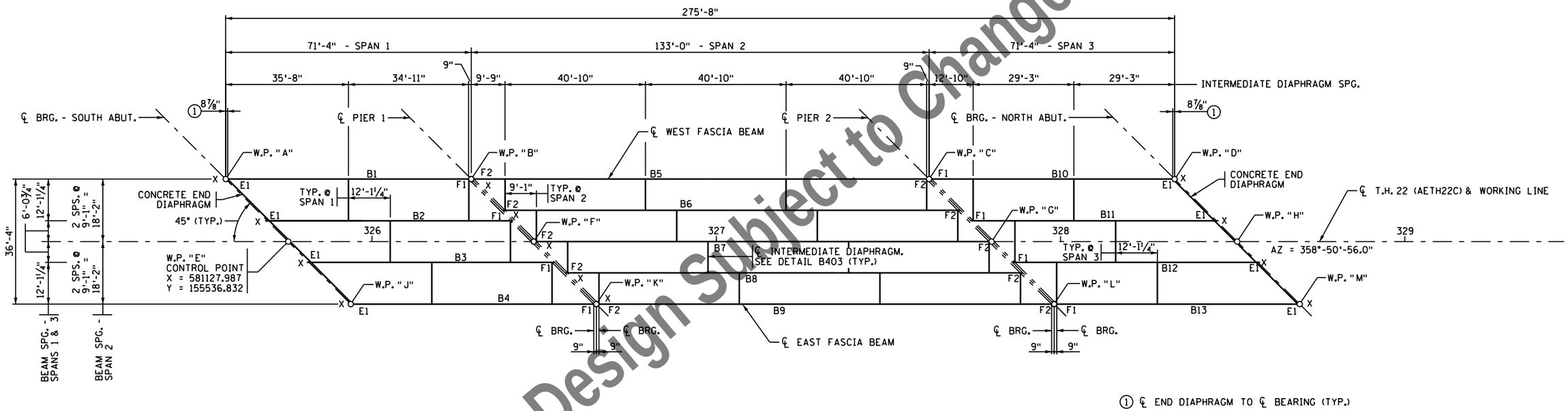

① ℄ END DIAPHRAGM TO ℄ BEARING (TYP.)

FRAMING PLAN

E1 = EXPANSION CURVED PLATE BEARING ASSEMBLY, TYPE 1 (8 - REQUIRED)

F1 = FIXED CURVED PLATE BEARING ASSEMBLY, TYPE 1 (8 - REQUIRED)

F2 = FIXED CURVED PLATE BEARING ASSEMBLY, TYPE 1 (10 - REQUIRED)

X = MARKS END OF BEAMS

Preliminary Design Subject to Change

NO	DATE	BY	CHK	REVISIONS

I HEREBY CERTIFY THAT THIS PLAN WAS PREPARED BY ME OR UNDER MY DIRECT SUPERVISION AND THAT I AM A DULY LICENSED PROFESSIONAL ENGINEER UNDER THE LAWS OF THE STATE OF MINNESOTA.

LICENSED PROFESSIONAL ENGINEER: CARL OSBERG

DATE: 8/12/2016 REG NO: 42732

WSB & Associates, Inc.
701 Xenia Avenue South, Suite 300
Minneapolis, MN 55416
www.wsbeng.com
763-541-4800 - Fax 763-541-1700
INFRASTRUCTURE • ENGINEERING • PLANNING • CONSTRUCTION

BLUE EARTH COUNTY
MINNESOTA PROJ. NO. STP SM
STATE PROJECT NO. 0704-07051

TITLE: FRAMING PLAN

DES: JH	DR: DJV	APPROVED:
CHK: CBO	CHK: CBO	

Sheet 38 of 54 Sheets

Bridge No. 07051

7/28/2016 10:35:41 AM
K:\03265-000\Cad\Plan\cbr07051_frame.dgn

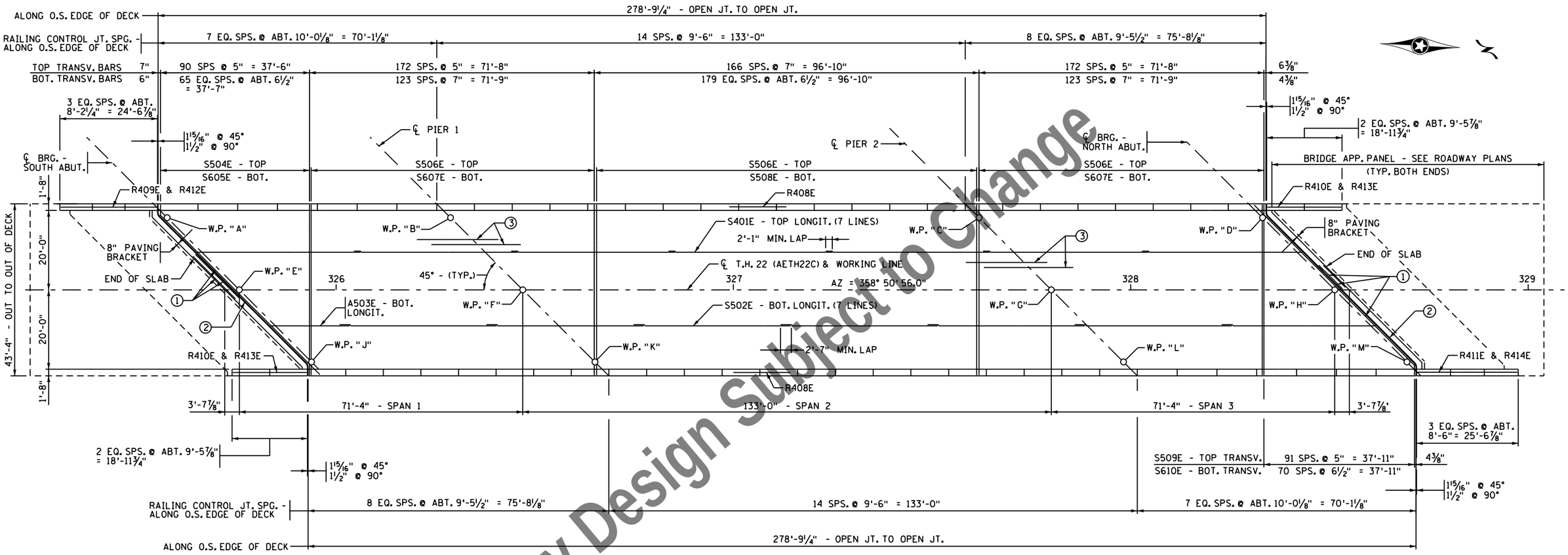

DECK PLAN

① SEE SECTION THRU ABUTMENT ON SHT. 41 FOR BARS LOCATED AT EXP. DEVICE AND ENDSLAB - S414E

② EXPANSION DEVICE TYPE 5

③ SEE SHT. 41 FOR EXTRA REINFORCEMENT OVER PIERS

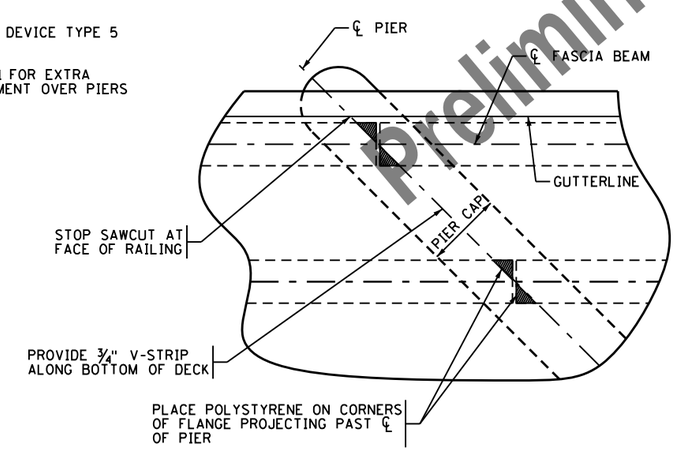

PLAN VIEW - AT PIERS

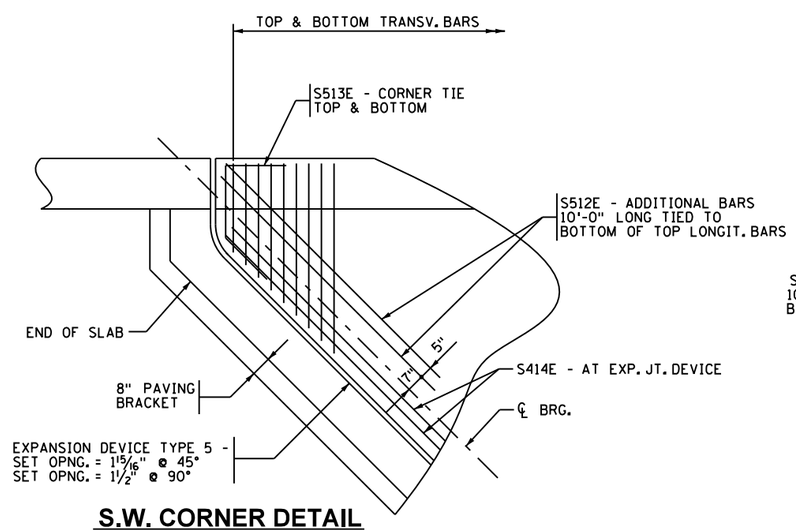

S.W. CORNER DETAIL

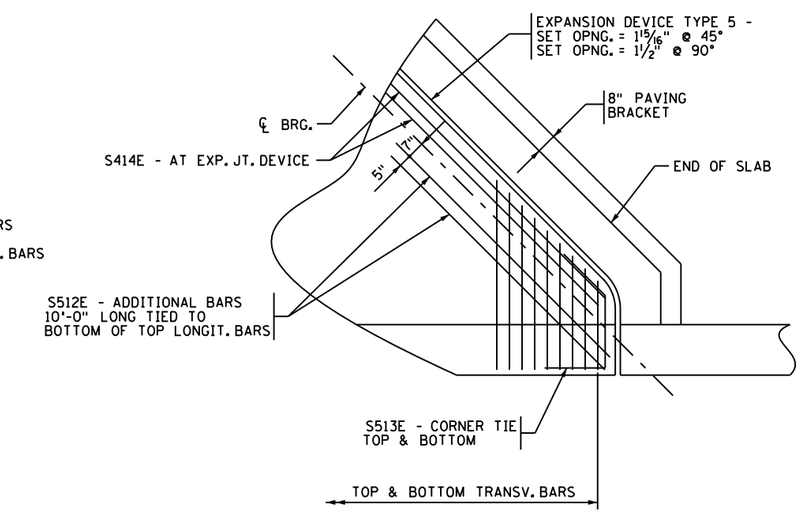

N.E. CORNER DETAIL

Preliminary Design Subject to Change

NO	DATE	BY	CHK	REVISIONS

I HEREBY CERTIFY THAT THIS PLAN WAS PREPARED BY ME OR UNDER MY DIRECT SUPERVISION AND THAT I AM A DULY LICENSED PROFESSIONAL ENGINEER UNDER THE LAWS OF THE STATE OF MINNESOTA.

LICENSED PROFESSIONAL ENGINEER: CARL OSBERG
DATE: 8/12/2016 REG NO: 42732

WSB & Associates, Inc.
701 Xenia Avenue South, Suite 300
Minneapolis, MN 55416
www.wsbeng.com
763-541-4800 - Fax 763-541-1700
INFRASTRUCTURE • ENGINEERING • PLANNING • CONSTRUCTION

BLUE EARTH COUNTY
MINNESOTA PROJ. NO. STP SM
STATE PROJECT NO. 0704-07051

TITLE: SUPERSTRUCTURE DETAILS

DES: JH	DR: DJV	APPROVED:
CHK: CBO	CHK: CBO	

Sheet 39 of 54 Sheets

Bridge No. 07051

7/28/2016 10:35:42 AM
K:\03265-000\Cad\Plan\cbr0705l_supl.dgn

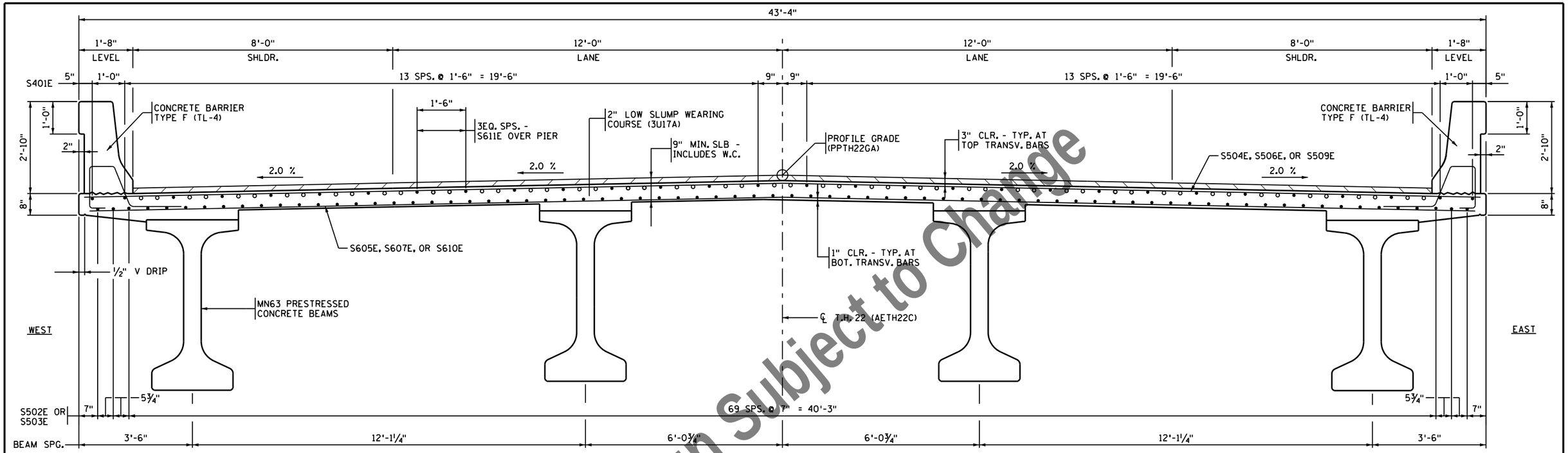

TRANSVERSE SECTION THRU DECK - SPANS 1 & 3

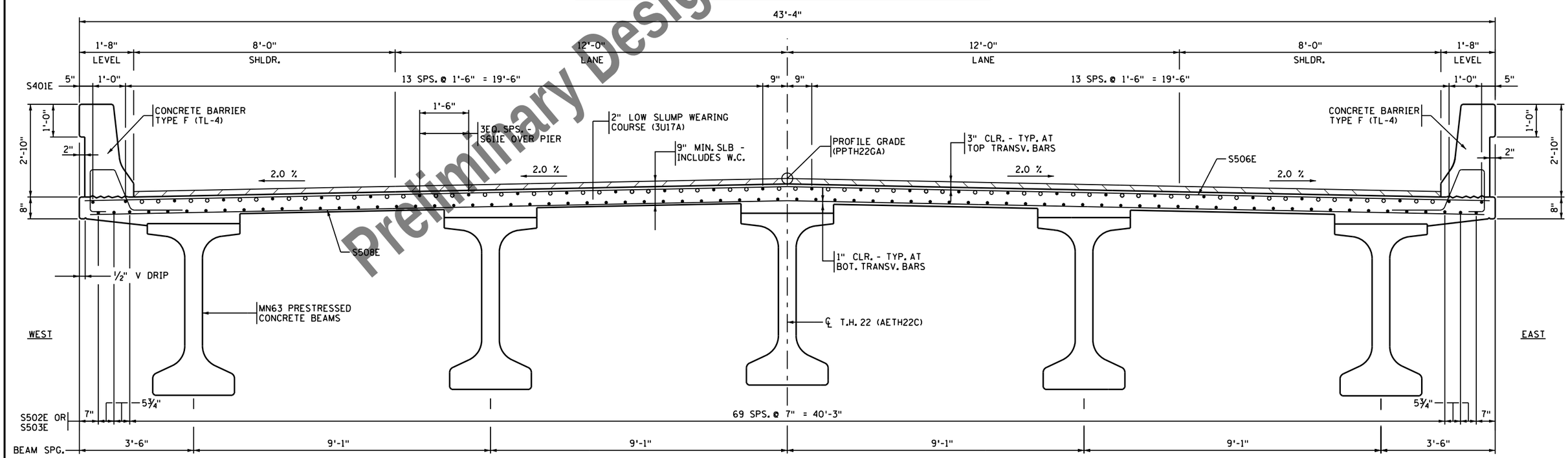

TRANSVERSE SECTION THRU DECK - SPAN 2

Preliminary Design Subject to Change

NO	DATE	BY	CHK	REVISIONS

I HEREBY CERTIFY THAT THIS PLAN WAS PREPARED BY ME OR UNDER MY DIRECT SUPERVISION AND THAT I AM A DULY LICENSED PROFESSIONAL ENGINEER UNDER THE LAWS OF THE STATE OF MINNESOTA.

LICENSED PROFESSIONAL ENGINEER: CARL OSBERG
DATE: 8/12/2016 REG NO: 42732

WSB & Associates, Inc.
701 Xenia Avenue South, Suite 300
Minneapolis, MN 55416
www.wsbeng.com
763-541-4800 - Fax 763-541-1700
INFRASTRUCTURE • ENGINEERING • PLANNING • CONSTRUCTION

BLUE EARTH COUNTY
MINNESOTA PROJ. NO. STP SM
STATE PROJECT NO. 0704-07051

TITLE: SUPERSTRUCTURE DETAILS

DES: JH	DR: DJV	APPROVED:
CHK: CBO	CHK: CBO	

Sheet 40 of 54 Sheets

Bridge No. 07051

7/28/2016 10:35:42 AM
K:\03265-000\CadPlan\cbr07051_sup2.dgn

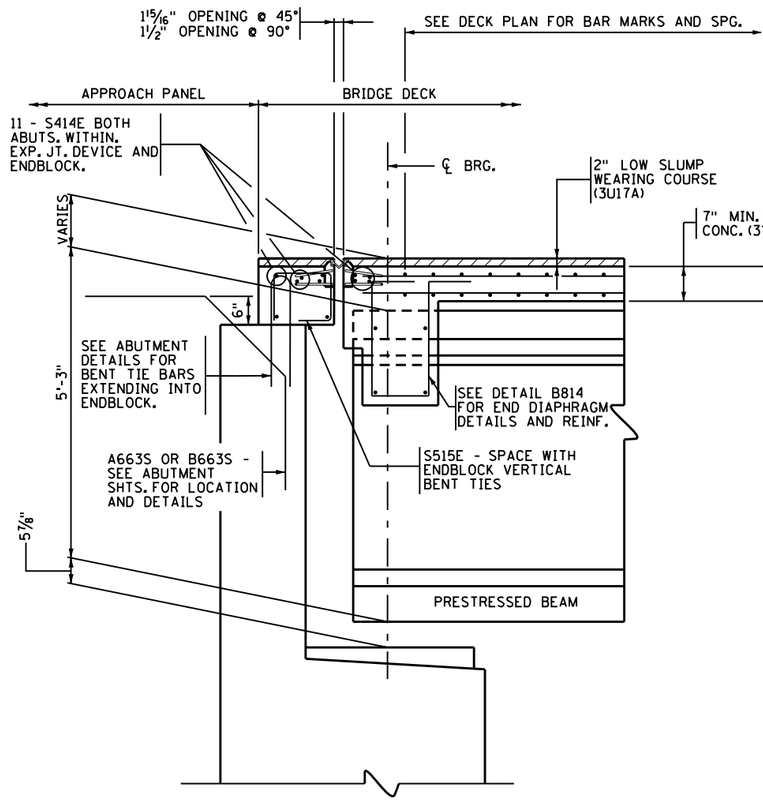

SECTION THRU ABUTMENT

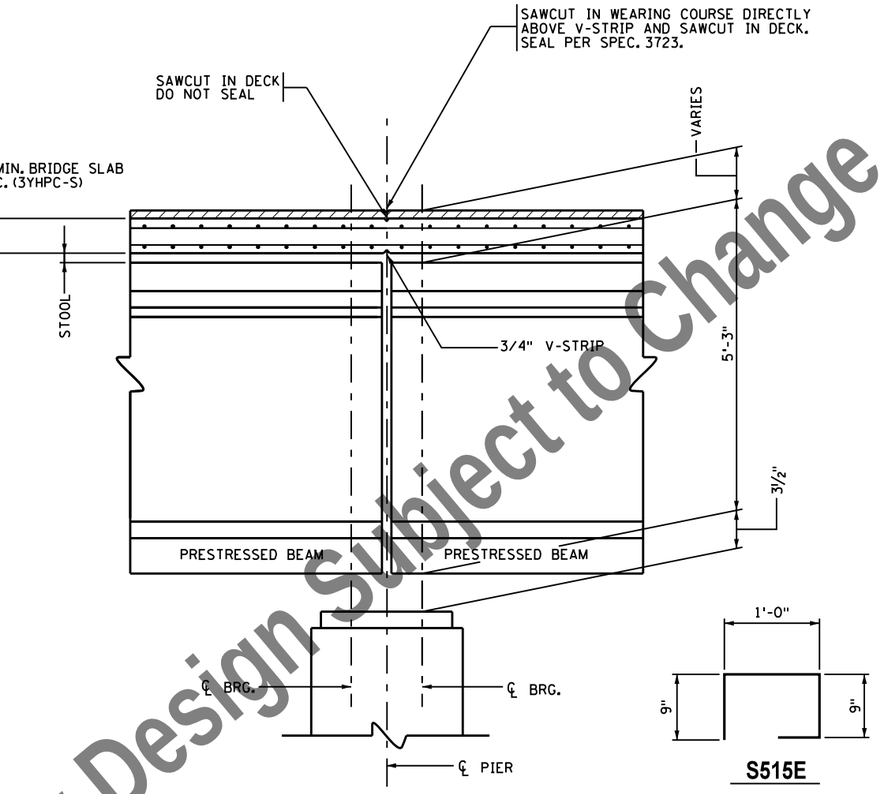

PART LONGITUDINAL DECK SECTION

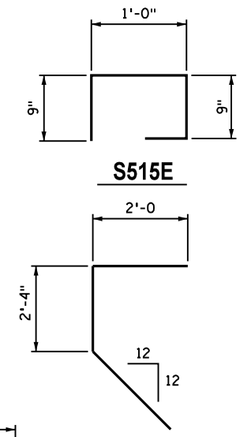

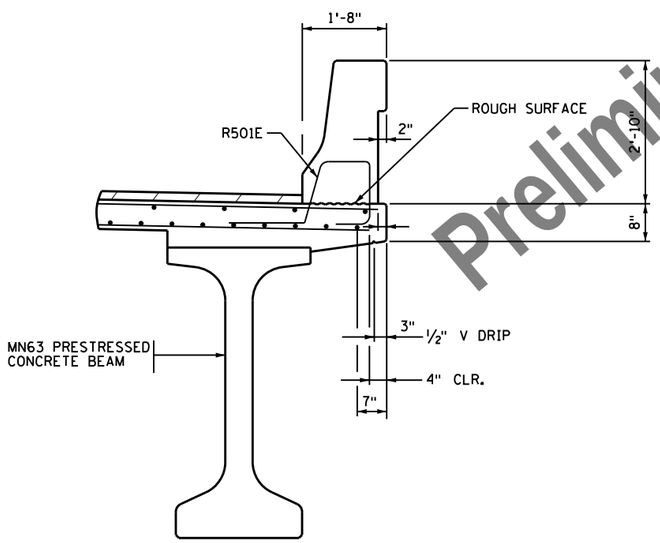

EDGE OF DECK DETAIL

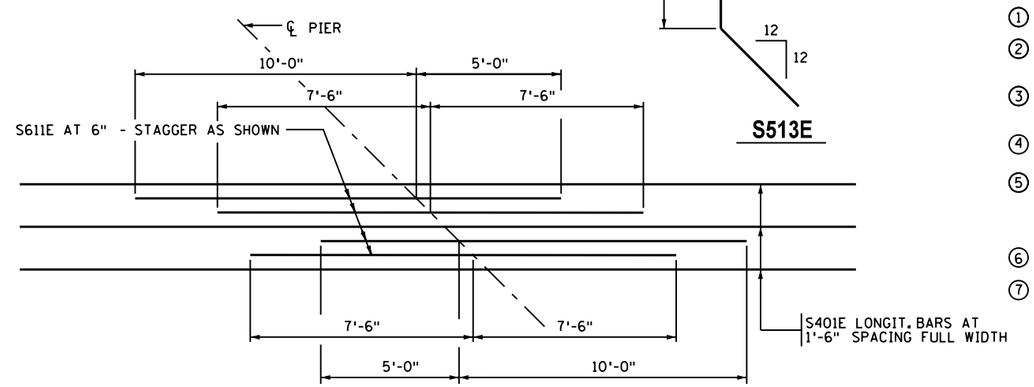

ADDITIONAL TOP REINFORCEMENT AT PIER

BILL OF REINFORCEMENT - SUPERSTRUCTURE

BAR	NO.	LENGTH	SHAPE	LOCATION
S401E	210	41'-8"		SLAB - TOP LONGIT.
S502E	518	39'-8"		SLAB - BOT. LONGIT.
S503E	74	20'-0"		SLAB - BOT. LONGIT.
S504E	91	(A)		SLAB - TOP TRANSV.
S605E	65	(B)		SLAB - BOT. TRANSV.
S506E	508	43'-0"		SLAB - TOP TRANSV.
S607E	246	42'-8"		SLAB - BOT. TRANSV.
S508E	178	42'-8"		SLAB - BOT. TRANSV.
S509E	92	(C)		SLAB - TOP TRANSV.
S610E	71	(D)		SLAB - BOT. TRANSV.
S611E	108	15'-0"		SLAB - TOP OVER PIERS
S512E	8	10'-0"		SLAB - EXTRA AT CORNERS
S513E	4	6'-3"		SLAB - S.W. & N.E. CORS.
S414E	44	30'-0"		ENDSLAB & EXP. DEVICE TRANSV.
S515E	122	3'-0"		ENDSLAB - TIES

(A) 1 SERIES OF 91 BARS - (2'-11" TO 43'-0")
(B) 1 SERIES OF 65 BARS - (2'-10" TO 43'-0")
(C) 1 SERIES OF 92 BARS - (2'-8" TO 43'-0")
(D) 1 SERIES OF 71 BARS - (2'-4" TO 42'-8")

SUMMARY OF QUANTITIES - SUPERSTRUCTURE

	BRIDGE SLAB CONCRETE (3YHPC-S)	12264	SQ. FT.
6	CONCRETE WEARING COURSE (3U17A)	15432	SQ. FT.
7	TYPE MOD. F (TL-4) BARRIER CONCRETE (3S52)	647	LIN. FT.
1	REINFORCEMENT BARS (EPOXY COATED)	102650	POUND
2	CURVED PLATE ELASTOMERIC BRG. ASSEMBLY TYPE E1	8	EACH
2	CURVED PLATE ELASTOMERIC BRG. ASSEMBLY TYPE F1	8	EACH
2	CURVED PLATE ELASTOMERIC BRG. ASSEMBLY TYPE F2	10	EACH
	EXPANSION JOINT DEVICES, TYPE 5	116	LIN. FT.
3	PRESTRESSED CONCRETE BEAMS TYPE MN63	1239	LIN. FT.
	DIAPHRAGMS FOR TYPE MN63 PRESTR. BEAMS	291	LIN. FT.
5	BENCH MARK DISK	1	EACH
4	BRIDGE NAME PLATE	1	EACH

1. INCLUDES SLAB, END DIAPHRAGM, & RAILING REINFORCEMENT
2. PAYMENT FOR BEARINGS INCLUDED IN ITEM "BEARING ASSEMBLY" PER EACH.
3. PAYMENT FOR BEAMS INCLUDED IN ITEM "PRESTRESSED CONCRETE BEAMS TYPE MN63" PER LINEAR FOOT.
4. TO BE INCLUDED IN PRICE BID FOR OTHER ITEMS
5. STATE WILL FURNISH DISK. BEND PRONGS OUTWARD TO ANCHOR DISK IN CONCRETE. BOTTOM OF DISK TOP TO BE PLACED FLUSH WITH CONCRETE. PAYMENT FOR PLACING TO BE INCLUDED IN PRICE BID FOR OTHER ITEMS.
6. INCLUDES APPROACH PANELS
7. INCLUDES RAILING ON APPROACH PANELS

Preliminary Design Subject to Change

NO	DATE	BY	CHK	REVISIONS

I HEREBY CERTIFY THAT THIS PLAN WAS PREPARED BY ME OR UNDER MY DIRECT SUPERVISION AND THAT I AM A DULY LICENSED PROFESSIONAL ENGINEER UNDER THE LAWS OF THE STATE OF MINNESOTA.

LICENSED PROFESSIONAL ENGINEER: CARL OSBERG
DATE: 8/12/2016 REG NO: 42732

WSB & Associates, Inc.
701 Xenia Avenue South, Suite 300
Minneapolis, MN 55416
www.wsbeng.com
763-541-4800 - Fax 763-541-1700
INFRASTRUCTURE • ENGINEERING • PLANNING • CONSTRUCTION

BLUE EARTH COUNTY
MINNESOTA PROJ. NO. STP SM
STATE PROJECT NO. 0704-07051

TITLE: SUPERSTRUCTURE DETAILS

DES: JH	DR: DJV	APPROVED:
CHK: CBO	CHK: CBO	

Sheet 41 of 54 Sheets

Bridge No. 07051

7/28/2016 10:35:42 AM
K:\03265-000\Cad\Plan\cbr-07051_sup3.dgn

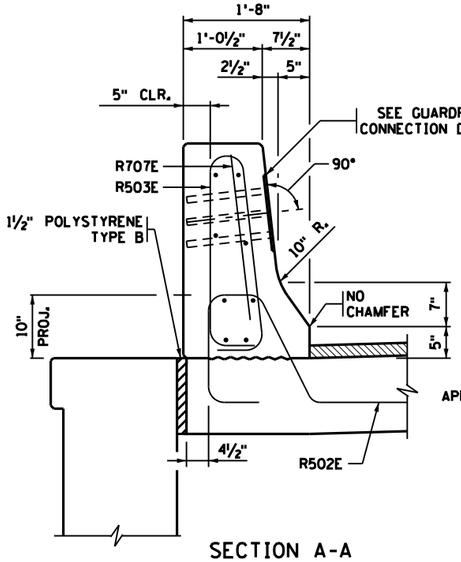

SECTION A-A

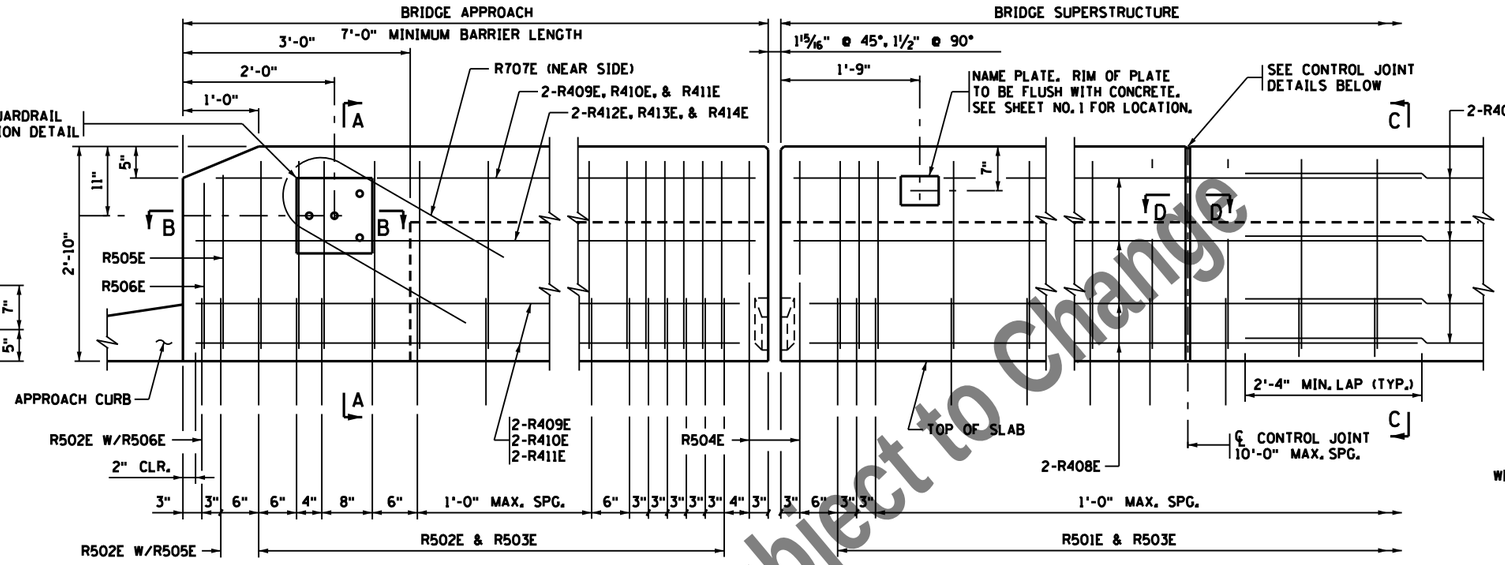

EXPANSION JOINT

EXPANSION JOINT NOT SHOWN

CONTROL JOINT

INSIDE ELEVATION OF BARRIER

CONCRETE WEARING COURSE NOT SHOWN
(7'-0" BARRIER ON APPROACH SHOWN)

BARRIER MEETS TEST LEVEL 4 REQUIREMENTS OF NCHRP REPORT 350

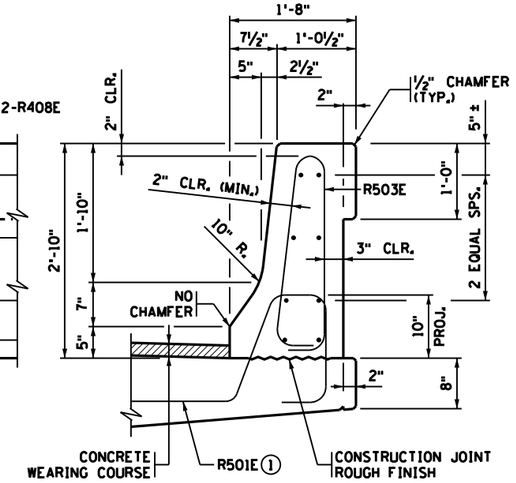

SECTION C-C

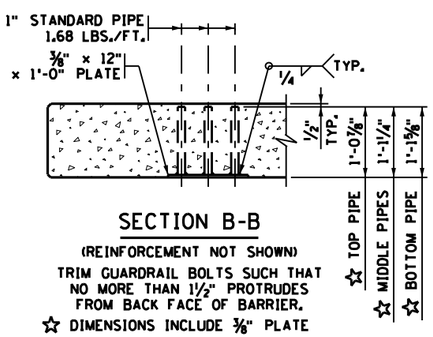

SECTION B-B

(REINFORCEMENT NOT SHOWN)

TRIM GUARDRAIL BOLTS SUCH THAT NO MORE THAN 1½" PROTRUDES FROM BACK FACE OF BARRIER.

☆ DIMENSIONS INCLUDE ⅜" PLATE

BILL OF REINFORCEMENT FOR BARRIER				
BAR	NO.	LENGTH	SHAPE	LOCATION
R501E	562	5'-3"		BARRIER DOWEL
R502E	119	5'-5"		BARRIER DOWEL
R503E	665	6'-6"		BARRIER VERTICAL
R504E	8	4'-8"		BARRIER VERTICAL
R505E	4	6'-0"		BARRIER VERTICAL
R506E	4	5'-10"		BARRIER VERTICAL
R707E	4	6'-6"		BARRIER VERTICAL
③ R408E	128	37'-0"		BARRIER LONGIT.
R409E	6	23'-8"		BARRIER LONGIT.
R410E	12	18'-1"		BARRIER LONGIT.
R411E	6	24'-7"		BARRIER LONGIT.
R412E	2	24'-2"		BARRIER LONGIT.
R413E	4	18'-7"		BARRIER LONGIT.
R414E	2	25'-1"		BARRIER LONGIT.

③ 8 LINES WITH A 2'-4" MIN. LAP

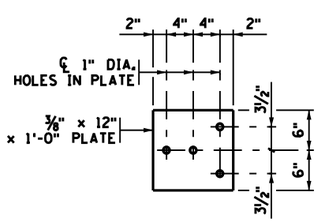

GUARDRAIL CONNECTION DETAIL

GALVANIZE AFTER FABRICATION PER SPEC. 3394
ESTIMATED WEIGHT = 23 LBS

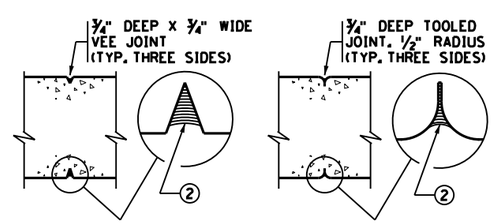

SECTION D-D
CONTRACTOR OPTION 1

SECTION D-D
CONTRACTOR OPTION 2

CONTROL JOINT DETAILS

WHEN USING SLIP FORM METHOD TO PLACE THE CONCRETE, CUT JOINT 3 INCHES DEEP USING MARGIN TROWEL OR SIMILAR MEANS IMMEDIATELY AFTER CONCRETE PLACEMENT (TYP. THREE SIDES)

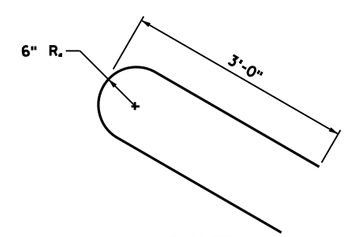

R707E

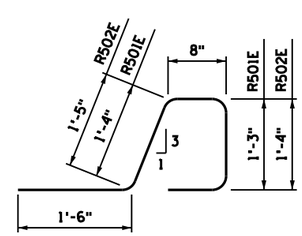

R501E, R502E

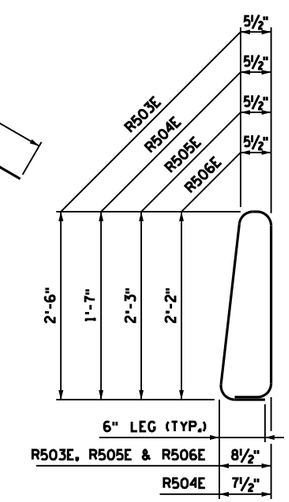

R503E, R504E, R505E & R506E

GENERAL NOTES

MEASURE PAYMENT LENGTH BETWEEN THE OUTSIDE FACES OF THE BARRIER.

CONCRETE BARRIER = 502 LBS./FT. (0.124 CU. YDS./FT.)

FINISH ALL EDGES OF BARRIER AND END POST WITH ½" CHAMFER, EXCEPT WHERE OTHERWISE NOTED.

SPACE OF CONTROL JOINTS AT BE 10 FT. MAXIMUM. SEE SUPERSTRUCTURE SHEET FOR JOINT SPACING.

GUARDRAIL CONNECTION TO BE STRUCTURAL STEEL, SPEC. 3306.

GUARDRAIL CONNECTION AND NAME PLATE TO BE CONSIDERED INCIDENTAL TO BARRIER.

BARRIER QUANTITIES ARE LISTED IN SUMMARY OF QUANTITIES FOR SUPERSTRUCTURE.

① PLACE BAR ON TOP OF BOTTOM REINFORCEMENT MAT.

② JOINT SEALANT PER MnDOT APPROVED/QUALIFIED PRODUCTS LIST - CRACK AND JOINT MATERIALS - SILICONE JOINT SEALERS.

Preliminary Design Subject to Change

REVISION:

APPROVED: JANUARY 13, 2015
Nancy Daubenberger
STATE BRIDGE ENGINEER

NO	DATE	BY	CHK	REVISIONS

I HEREBY CERTIFY THAT THIS PLAN WAS PREPARED BY ME OR UNDER MY DIRECT SUPERVISION AND THAT I AM A DULY LICENSED PROFESSIONAL ENGINEER UNDER THE LAWS OF THE STATE OF MINNESOTA.

LICENSED PROFESSIONAL ENGINEER: CARL OSBERG
DATE: 8/12/2016 REG NO: 42732

WSB & Associates, Inc.
701 Xenia Avenue South, Suite 300
Minneapolis, MN 55416
www.wsbeng.com
763-541-4800 - Fax 763-541-1700
INFRASTRUCTURE • ENGINEERING • PLANNING • CONSTRUCTION

BLUE EARTH COUNTY
MINNESOTA PROJ. NO. STP SM
STATE PROJECT NO. 0704-07051

TITLE: CONCRETE BARRIER (TYPE F, TL-4)
PARAPET ABUTMENT WITH INTEGRAL END POST (WITH CONCRETE WEARING COURSE)

DES: JH | DR: DJV | APPROVED:
CHK: CBO | CHK: CBO

Sheet 42 of 54 Sheets

Bridge No. 07051

FIG. 5-397.117(B)

7/28/2016 10:35:43 AM
K:\03265-000\Cad\Plan\cbr07051_railing1.dgn

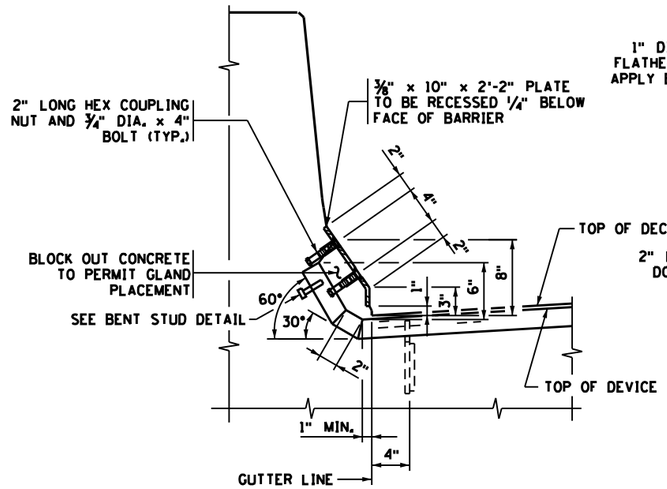

SECTION THROUGH BARRIER

TYPE F BARRIER

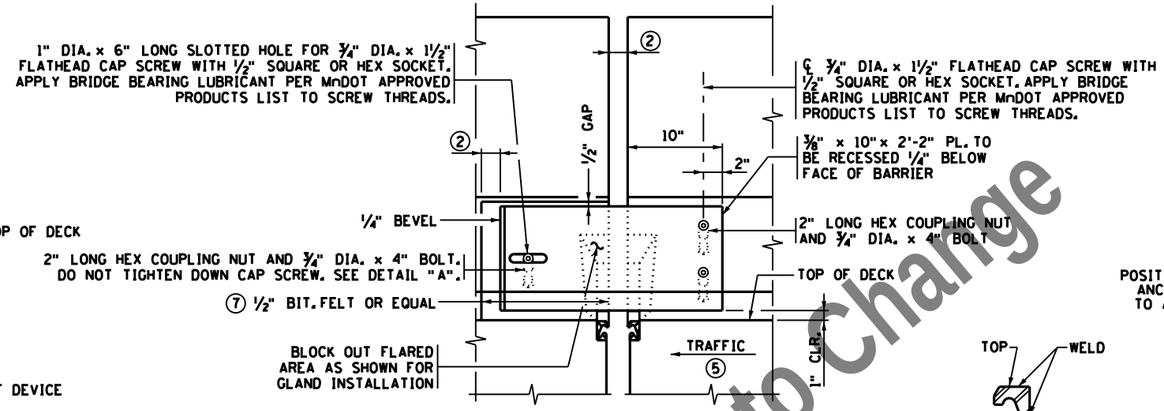

BARRIER ELEVATION

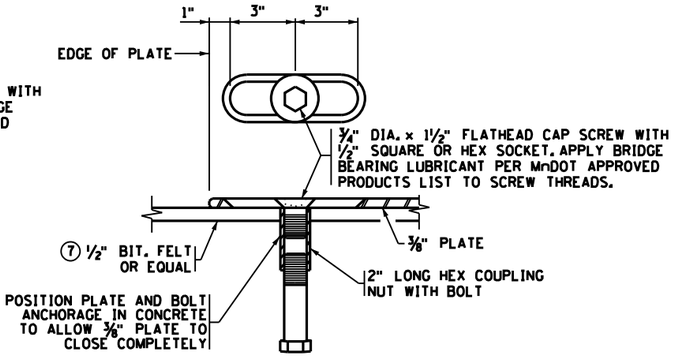

DETAIL "A"

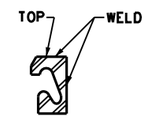

SECTION C-C

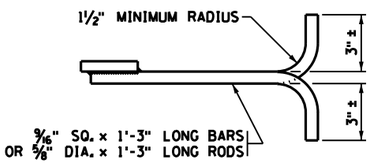

BAR-ROD DETAIL

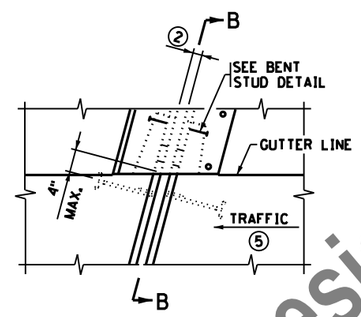

PLAN VIEW @ EXPANSION DEVICE

MEDIAN OR SIDEWALK ALTERNATE

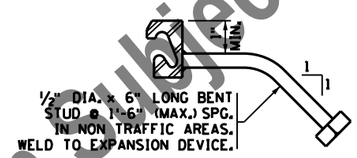

BENT STUD DETAIL

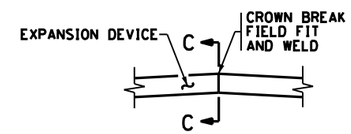

DETAIL "B"

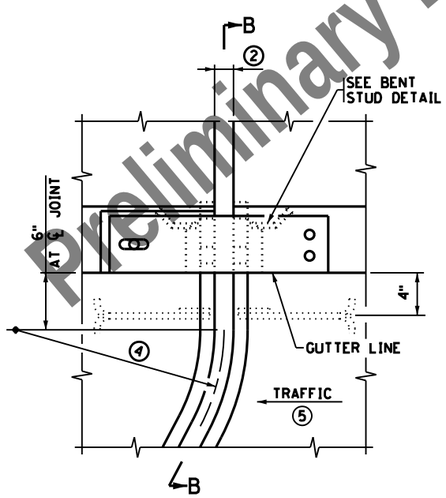

PLAN VIEW @ EXPANSION DEVICE

WITH CURVED DEVICE ALTERNATE

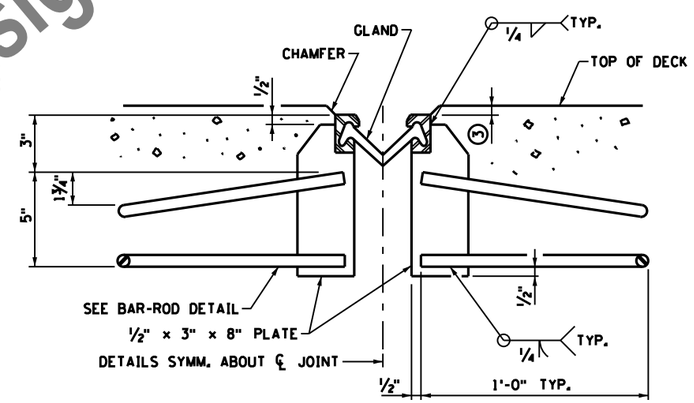

SECTION A-A

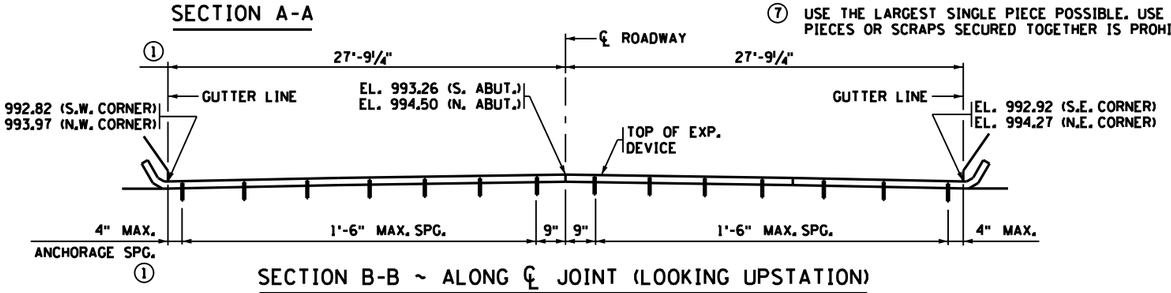

SECTION B-B ~ ALONG ℄ JOINT (LOOKING UPSTATION)

ELEVATIONS SHOWN ARE ½" BELOW TOP OF SLAB @ ℄ JOINT

GENERAL NOTES

GALVANIZE STRUCTURAL STEEL AFTER FABRICATION AS PER SPEC. 3394. GALVANIZE FASTENERS AS PER SPEC. 3392.

JOINTS IN EXTRUSION SHALL BE LOCATED AT BREAKS IN TRANSVERSE PROFILE AND AS OTHERWISE REQUIRED. JOINTS SHALL BE CLOSE FIT AND WELDED. REPAIR AFTER WELDING AS PER SPEC. 2471.3L.

STRUCTURAL STEEL SHALL COMPLY WITH SPEC. 3306 OR SPEC. 3309.

EXPANSION DEVICE SHALL BE STRAIGHTENED TO A TOLERANCE OF ⅛" IN 10 FT.

¾" DIA. x 1½" FLATHEAD CAP SCREW WITH ½" SQUARE OR HEX SOCKET PER SPEC 3391. CAP SCREWS SHALL BE COUNTERSUNK 1/16" BELOW TOP OF PLATE. APPLY BRIDGE BEARING LUBRICANT PER MnDOT APPROVED PRODUCTS LIST TO SCREW THREADS

LENGTH OF PAYMENT FOR DEVICE IS FROM OUTER END TO OUTER END OF EXTRUSION ALONG CENTERLINE OF JOINT. REFER TO THE SPECIAL PROVISIONS FOR MORE SPECIFIC PAYMENT INFORMATION.

① DIMENSIONS ARE ALONG CENTERLINE OF JOINT.

② 1 15/16" AT 45° F; 1½" AT 90° F.

③ ⅛" (¼" MAX.).
½" (⅝" MAX.) WHEN SNOWPLOW FINGERS ARE USED. SNOWPLOW FINGERS ARE REQUIRED FOR SKEWS OVER 15° AND LESS THAN 50°.

④ SEE CORNER DETAILS FOR RADIUS & CONFIGURATION.

⑤ SEE SHEET NO. 1 FOR DIRECTION OF TRAFFIC.

⑥ PLACE BAR-ROD NORMAL TO JOINT ON NEW BRIDGES AND JOINT REPLACEMENTS. ON JOINT REPLACEMENTS WHEN SKEW IS OVER 15° AND LESS THAN 50° BEND RODS PARALLEL TO ℄ ROADWAY.

⑦ USE THE LARGEST SINGLE PIECE POSSIBLE. USE OF SMALL PIECES OR SCRAPS SECURED TOGETHER IS PROHIBITED.

Preliminary Design subject to Change

REVISION: 09-11-2014

APPROVED: NOVEMBER 6, 1995

STATE BRIDGE ENGINEER

NO	DATE	BY	CHK	REVISIONS

I HEREBY CERTIFY THAT THIS PLAN WAS PREPARED BY ME OR UNDER MY DIRECT SUPERVISION AND THAT I AM A DULY LICENSED PROFESSIONAL ENGINEER UNDER THE LAWS OF THE STATE OF MINNESOTA.

LICENSED PROFESSIONAL ENGINEER: CARL OSBERG

DATE: 8/12/2016 REG NO: 42732

WSB & Associates, Inc.
701 Xenia Avenue South, Suite 300
Minneapolis, MN 55416
www.wsbeng.com
763-541-4800 - Fax 763-541-1700
INFRASTRUCTURE • ENGINEERING • PLANNING • CONSTRUCTION

BLUE EARTH COUNTY
MINNESOTA PROJ. NO. STP SM
STATE PROJECT NO. 0704-07051

TITLE: WATERPROOF EXPANSION DEVICE (WITH TYPE F BARRIER)

DES: JH	DR: DJV	APPROVED:
CHK: CBO	CHK: CBO	

Sheet 43 of 54 Sheets

Bridge No. 07051

FIG. 5-397.627

7/28/2016 10:35:43 AM
K:\103265-000\Cad\Plan\cbr-0705l_expansion.dgn

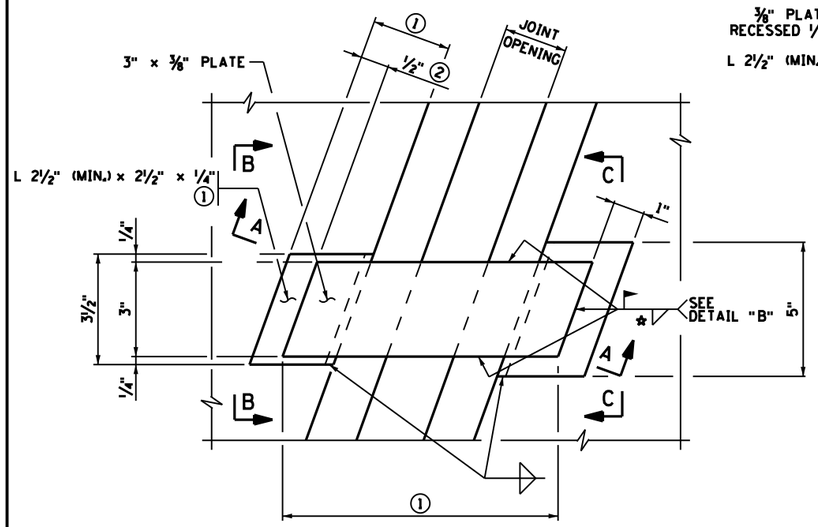

DETAIL "A"

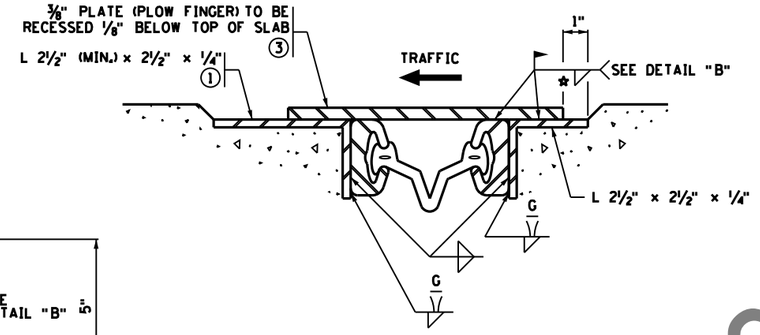

SECTION A-A

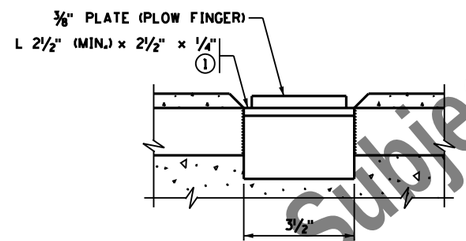

VIEW B-B

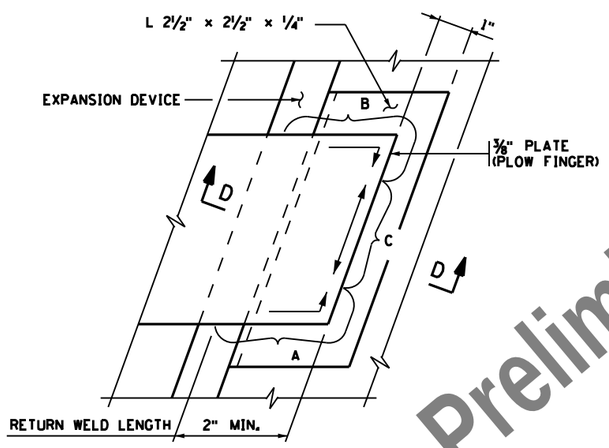

DETAIL "B"

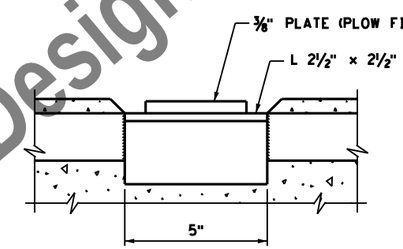

VIEW C-C

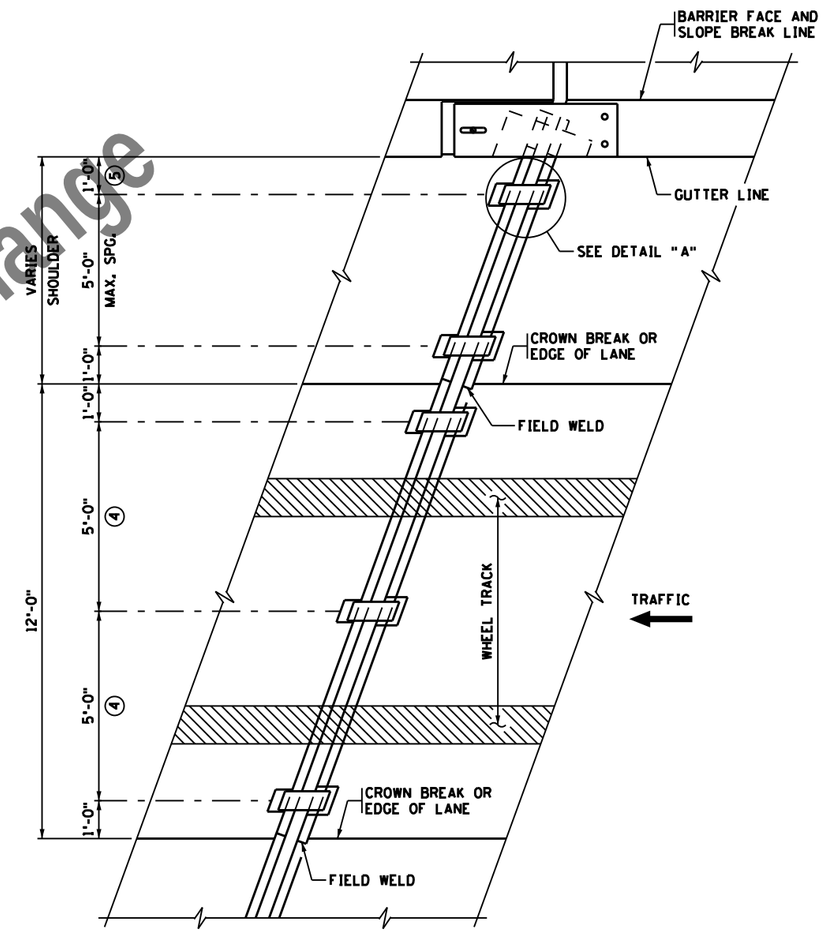

PLAN VIEW AT EXPANSION DEVICE

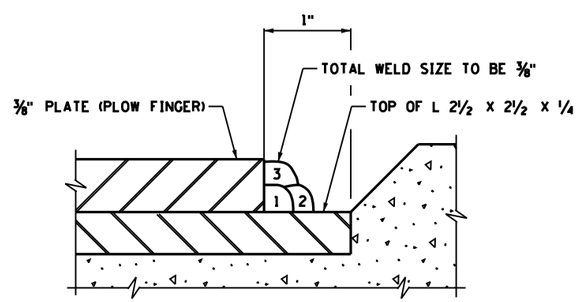

SECTION D-D

☆ WELDING PROCEDURE FOR PLOW FINGERS

I. ALL WELDING SHALL BE DONE WITH ⅛" DIAMETER LOW HYDROGEN SMAW ELECTRODES TYPE E7016 OR E7018.

II. PRIOR TO WELDING, REMOVE THE GALVANIZED COATING IN THE WELD AREA BY GRINDING.

III. WELD PASS ONE IN AREAS A AND B FIRST, THEN AREA C, FOLLOW WITH PASSES TWO AND THREE IN SAME ORDER, AS SHOWN IN DETAIL "B".

IV. REMOVE ALL WELD SLAG AND OTHER RESIDUE BETWEEN PASSES.

V. ALLOW AT LEAST 5 MINUTES COOLING TIME BETWEEN EACH OF THE NINE WELDING PASSES.

GENERAL NOTES

DO NOT GALVANIZE PLOW FINGERS.

① VARIES WITH SKEW AND EXPANSION OPENING.

② MINIMUM IN CLOSED POSITION.

③ EVERY SNOW PLOW FINGER SHALL HAVE FULL AND DIRECT BEARING ON THE PLATE THAT IS LOCATED UNDER THE MOVEMENT SIDE OF THE FINGER. NO CLICKING NOISE WILL BE ALLOWED.

④ MODIFY IF LANE WIDTH DIFFERS FROM 12 FT.

⑤ OMIT LAST PLOW FINGER ON DEVICE WITH CURVED END.

Preliminary Design Subject to Change

REVISION: 11-06-2013

APPROVED: SEPTEMBER 26, 2003

STATE BRIDGE ENGINEER

FIG. 5-397.628

NO	DATE	BY	CHK	REVISIONS

I HEREBY CERTIFY THAT THIS PLAN WAS PREPARED BY ME OR UNDER MY DIRECT SUPERVISION AND THAT I AM A DULY LICENSED PROFESSIONAL ENGINEER UNDER THE LAWS OF THE STATE OF MINNESOTA.

LICENSED PROFESSIONAL ENGINEER: CARL OSBERG

DATE: 8/12/2016 REG NO: 42732

WSB & Associates, Inc.
701 Xenia Avenue South, Suite 300
Minneapolis, MN 55416
www.wsbeng.com
763-541-4800 - Fax 763-541-1700
INFRASTRUCTURE • ENGINEERING • PLANNING • CONSTRUCTION

BLUE EARTH COUNTY
MINNESOTA PROJ. NO. STP SM
STATE PROJECT NO. 0704-07051

TITLE: WATERPROOF EXPANSION DEVICE SNOW PLOW PROTECTION (USE ON SKEWS OVER 15° AND LESS THAN 50°)

DES: JH	DR: DJV	APPROVED:
CHK: CBO	CHK: CBO	

Sheet 44 of 54 Sheets

Bridge No. 07051

7/28/2016 10:35:44 AM
K:\03265-000\CadPlan\cbr0705l_expansion2.dgn

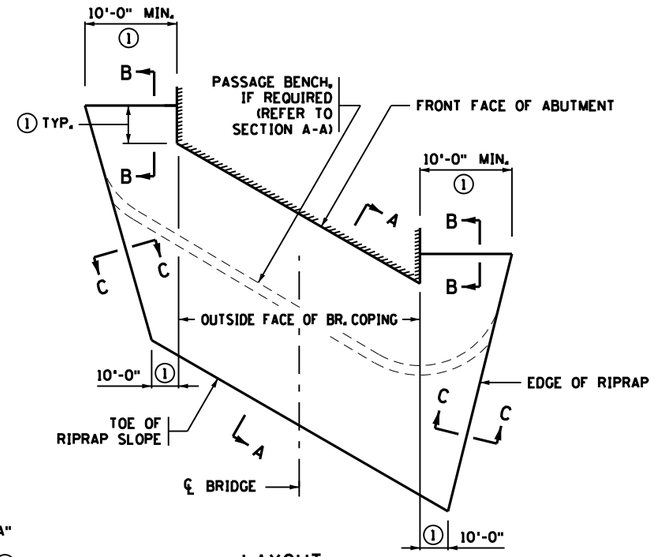

LAYOUT

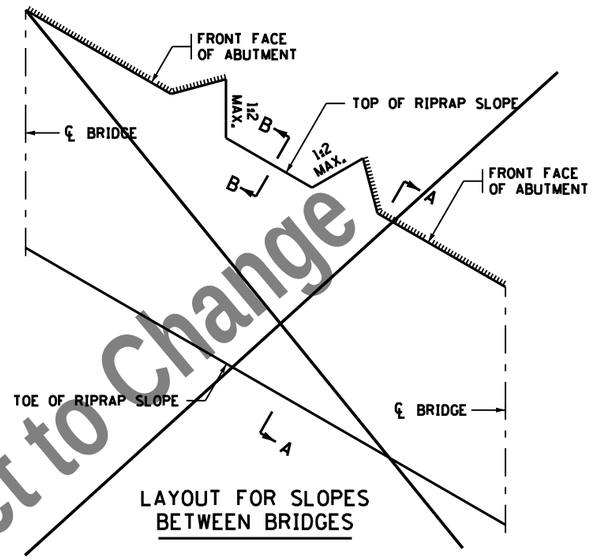

LAYOUT FOR SLOPES BETWEEN BRIDGES

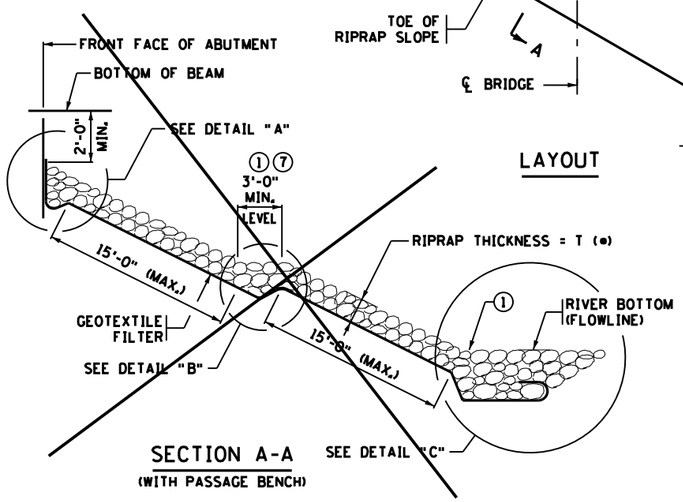

SECTION A-A
(WITH PASSAGE BENCH)

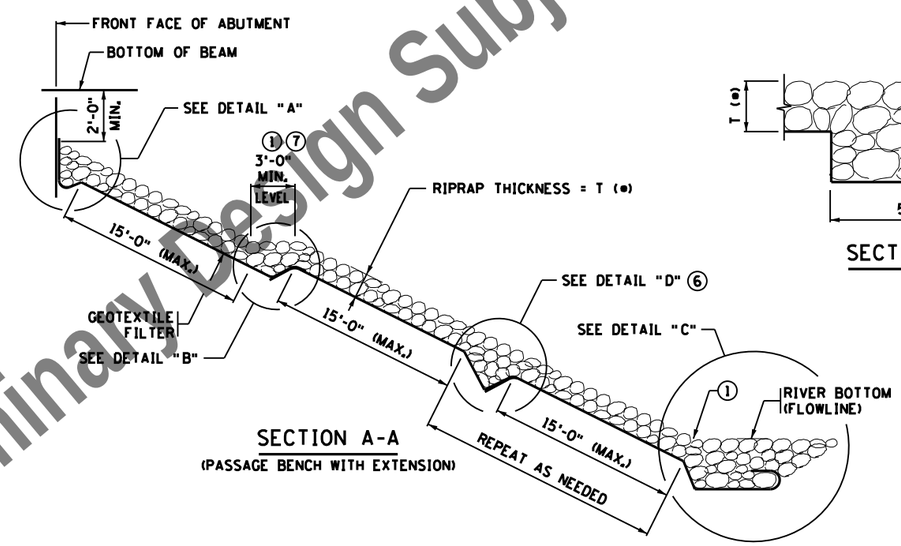

SECTION A-A
(PASSAGE BENCH WITH EXTENSION)

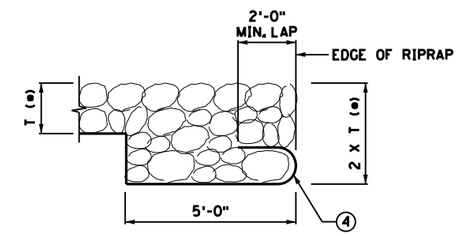

SECTION C-C

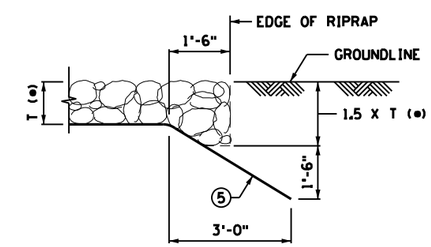

SECTION B-B

* DIMENSION T
CLASS III = 1'-6"
CLASS IV = 2'-0"

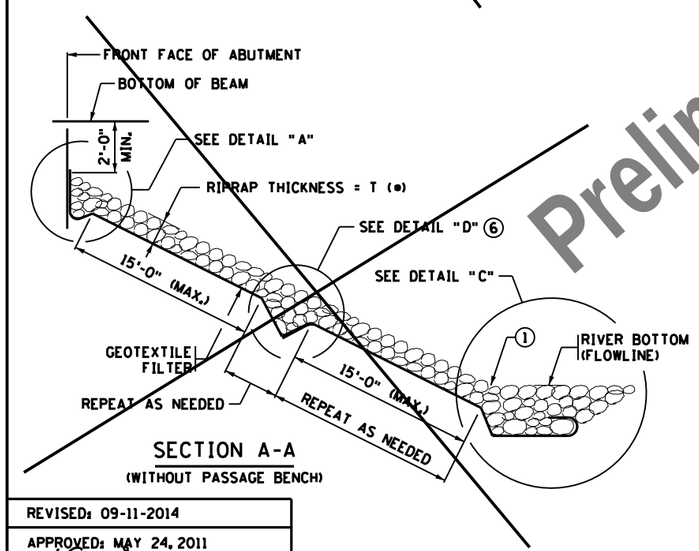

SECTION A-A
(WITHOUT PASSAGE BENCH)

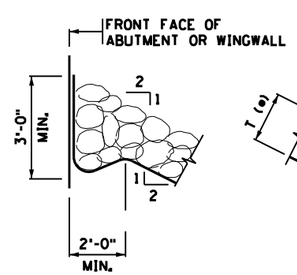

DETAIL "A"

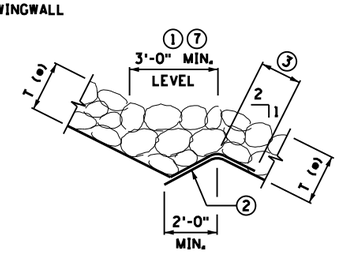

DETAIL "B"

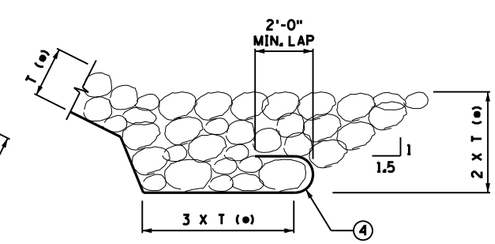

DETAIL "C"

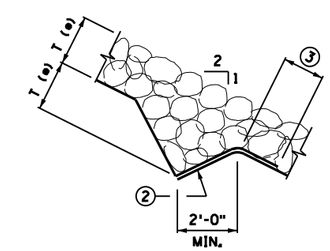

DETAIL "D"

GENERAL NOTES

GEOTEXTILE FILTER TYPE 7 PER SPEC. 3733, BY THE SQ. YD.

RIPRAP PER SPEC. 2511, RANDOM RIPRAP CLASS II OR III BY THE CU. YD.

SLOPES ARE EXPRESSED AS A RATIO OF VERTICAL DISTANCE : HORIZONTAL DISTANCE.

SLOPE BOTTOM OF TRENCHES 1:20 PARALLEL TO ABUTMENT FACE TO PROVIDE POSITIVE DRAINAGE.

① SEE PLAN SHEET NO. 1 FOR DIMENSIONS, AND FOR ELEVATIONS OF RIPRAP TOE AND PASSAGE BENCHES.

② PLACE RIPRAP IN TRENCH TO HOLD THE GEOTEXTILE FABRIC IN PLACE BEFORE PLACING THE REST OF THE RIPRAP (FROM THE BOTTOM OF THE SLOPE).

③ OVERLAP GEOTEXTILE FILTER 2'-0" MINIMUM.

④ WRAP GEOTEXTILE FILTER AROUND TOE, OVERHANG BETWEEN 1ST AND 2ND LAYER OF RIPRAP. USE HAND PLACEMENT OR SIMILAR METHODS TO ESTABLISH PROFILE AND PLACE FABRIC IF UNDER WATER.

⑤ BURY EDGES OF GEOTEXTILE FILTER TO DIRECT WATER FLOW OVER THE FABRIC WITHOUT UNDERMINING.

⑥ OMIT THE TRENCH SHOWN IN DETAIL "D" AND THE 15'-0" MAXIMUM SPACING BETWEEN TRENCHES FOR SLOPES 1:3 OR FLATTER.

⑦ SURFACE BENCHES WITH AGGREGATE CLASS 5 (INCIDENTAL TO RIPRAP). TIE BENCHES TO NATURAL GROUNDLINES OUTSIDE OF BRIDGE.

Preliminary Design Subject to Change

REVISED: 09-11-2014
APPROVED: MAY 24, 2011
Nancy Daubenberger
STATE BRIDGE ENGINEER

FIG. 5-397.309

NO	DATE	BY	CHK	REVISIONS

I HEREBY CERTIFY THAT THIS PLAN WAS PREPARED BY ME OR UNDER MY DIRECT SUPERVISION AND THAT I AM A DULY LICENSED PROFESSIONAL ENGINEER UNDER THE LAWS OF THE STATE OF MINNESOTA.

LICENSED PROFESSIONAL ENGINEER: CARL OSBERG
DATE: 8/12/2016 REG NO: 42732

WSB & Associates, Inc.
701 Xenia Avenue South, Suite 300
Minneapolis, MN 55416
www.wsbeng.com
763-541-4800 - Fax 763-541-1700
INFRASTRUCTURE • ENGINEERING • PLANNING • CONSTRUCTION

BLUE EARTH COUNTY
MINNESOTA PROJ. NO. STP SM
STATE PROJECT NO. 0704-07051

TITLE: RIPRAP SLOPE WITH GEOTEXTILE FILTER (SLOPES 1:2 & FLATTER)

DES: JH	DR: DJV	APPROVED:
CHK: CBO	CHK: CBO	
Sheet 45 of 54 Sheets		

Bridge No. 07051

7/28/2016 10:35:44 AM
K:\03265-000\CadVPlan\cbr07051_riprap.dgn

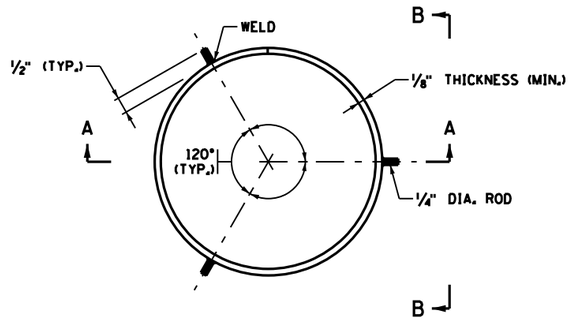

PLAN VIEW - SPLICE BACK-UP RING

PILE NOT SHOWN

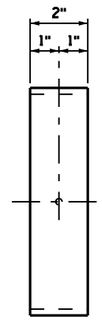

SECTION B-B

PILE NOT SHOWN

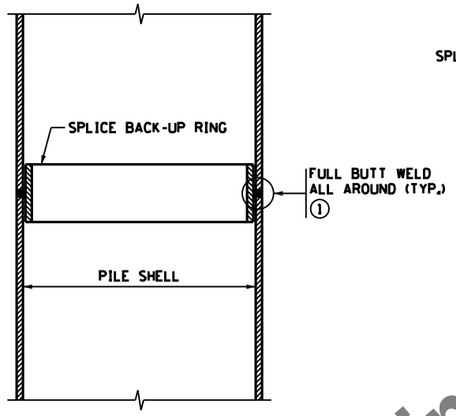

SECTION A-A

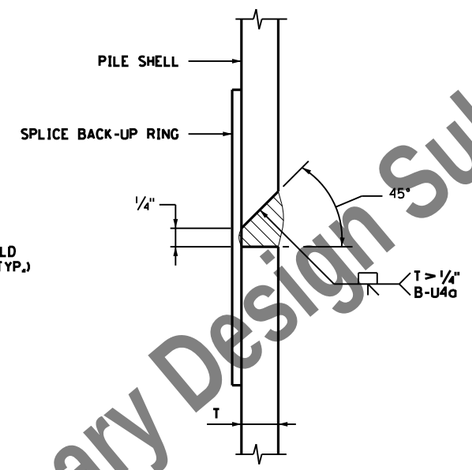

DETAIL "A" ①

NOTES:

APPROVED COMMERCIAL PILE SPLICE BACK-UP RING MAY BE USED IN LIEU OF THE TYPE DETAILED, PROVIDED THAT 1/4" ROOT IS MAINTAINED. BACK-UP RING SHALL HAVE A TIGHT FIT.

WELDING ELECTRODES SHALL BE CELLULOSIC TYPE ELECTRODES E-6010 OR E-6011.

ELECTRODES WHICH HAVE BECOME WET, SOILED OR DAMAGED SHALL NOT BE USED.

WELDING SHALL NOT BE DONE WHEN THE AMBIENT TEMPERATURE IS LOWER THAN 0° F. OR WHEN THE PILE IS WET OR EXPOSED TO FALLING RAIN OR SNOW. WHEN THE PILE METAL TEMPERATURE IS BELOW 32° F., THE PILE METAL IN THE AREA OF THE WELD SHALL BE HEATED TO A MINIMUM TEMPERATURE OF 70° F. AND MAINTAINED AT THIS TEMPERATURE DURING WELDING.

① FOR PILE SHELL THICKNESSES GREATER THAN 1/4", USE A B-U4a WELD CONFIGURATION. SEE DETAIL "A".

APPROVED: NOVEMBER 22, 2002	STATE OF MINNESOTA DEPARTMENT OF TRANSPORTATION	REVISION: 11-06-2013	DETAIL NO.
Daniel L. Dorgan STATE BRIDGE ENGINEER	PILE SPLICE (CAST-IN-PLACE CONCRETE PILES)		B201

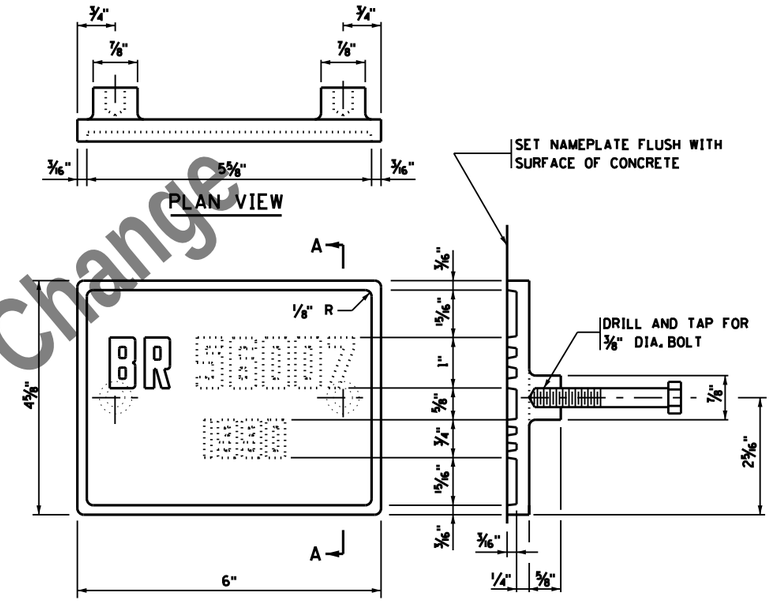

THE DASHED NUMBERS SHOWN ABOVE ARE FOR ILLUSTRATION. DATA TO BE SHOWN ON NAMEPLATE IS AS FOLLOWS:

BRIDGE 07051

YEAR 2017

NUMBERS FOR NAMEPLATE

NOTES:

MATERIAL SHALL COMPLY WITH SPEC. 3327.

LETTERS AND NUMBERS SHALL CONFORM TO THOSE SHOWN.

DRAFT ON LETTERS AND NUMBERS SHALL NOT BE MORE THAN 3" IN 12".

HORIZONTAL SPACING OF LETTERS AND NUMBERS SHALL PRODUCE A BALANCED LAYOUT IN PROPORTION TO SPACING SHOWN.

TOP SURFACE OF LETTERS, NUMBERS AND FRAMES SHALL BE BURNISHED.

FURNISH 2 STEEL BOLTS 3/8" DIA. x 3" LONG WITH EACH PLATE.

ALL DIMENSIONS FOR 3/4" HIGH LETTERS AND NUMBERS SHALL BE IN DIRECT PROPORTION TO THOSE SHOWN FOR THE 1" HIGH LETTERS AND NUMBERS.

APPROVED: NOVEMBER 22, 2002	STATE OF MINNESOTA DEPARTMENT OF TRANSPORTATION	REVISION 09-11-2014	DETAIL NO.
Daniel L. Dorgan STATE BRIDGE ENGINEER	BRIDGE NAMEPLATE (FOR NEW BRIDGES)		B101

Preliminary Design Subject to Change

NO	DATE	BY	CHK	REVISIONS

I HEREBY CERTIFY THAT THIS PLAN WAS PREPARED BY ME OR UNDER MY DIRECT SUPERVISION AND THAT I AM A DULY LICENSED PROFESSIONAL ENGINEER UNDER THE LAWS OF THE STATE OF MINNESOTA.

LICENSED PROFESSIONAL ENGINEER: CARL OSBERG

DATE: 8/12/2016 REG NO: 42732

WSB & Associates, Inc.
701 Xenia Avenue South, Suite 300
Minneapolis, MN 55416
www.wsbeng.com
763-541-4800 - Fax 763-541-1700
INFRASTRUCTURE • ENGINEERING • PLANNING • CONSTRUCTION

BLUE EARTH COUNTY
MINNESOTA PROJ. NO. STP SM
STATE PROJECT NO. 0704-07051

TITLE: BRIDGE DETAILS

DES: JH	DR: DJV	APPROVED:	Bridge No. 07051
CHK: CBO	CHK: CBO		
Sheet 46 of 54 Sheets			

7/28/2016 10:35:44 AM
K:\03265-000\Cad\Plan\cbr07051_detail.dgn

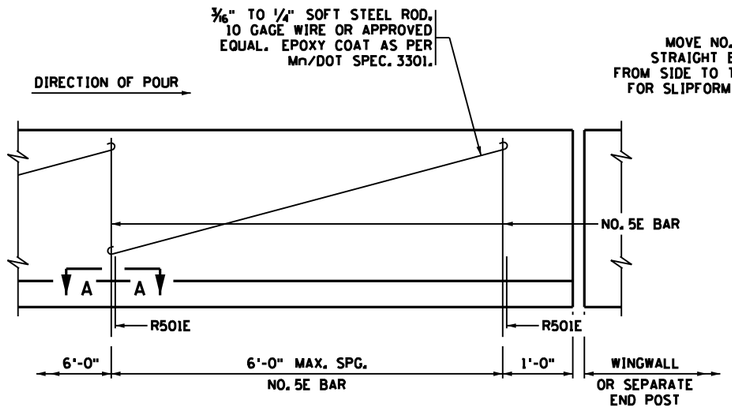

INSIDE ELEVATION OF RAILING

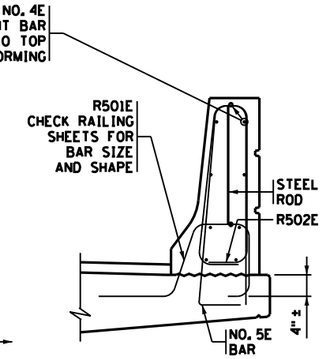

RAILING SECTION

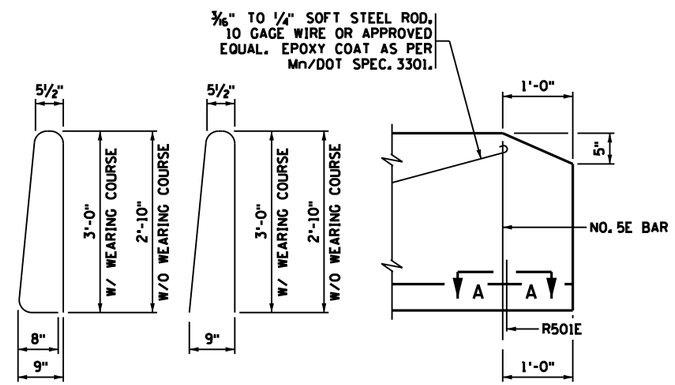

NO. 5E BAR

NO. 5E BAR
DRILLED IN ALTERNATE

INSIDE ELEVATION OF RAILING
AT END OF WINGWALL

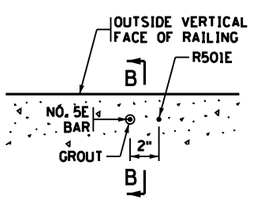

SECTION A-A

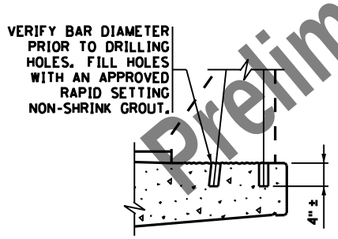

SECTION B-B

INSTALLATION DETAILS
FOR NO. 5E (DRILLED IN ALTERNATE)

NOTES:

CONTRACTOR WILL TOOL V-GROOVE AT DEFLECTION JOINTS AT TIME RAIL IS CAST AND SHALL EXTEND V-GROOVE AROUND ENTIRE PERIMETER OF RAIL.

FOR ADDITIONAL DIMENSIONS, DETAILS, REINFORCEMENT AND NOTES SEE RAILING SHEET.

FORM RAIL FOR A MINIMUM OF 2' ON EACH SIDE OF EXPANSION DEVICES, LIGHT STANDARDS AND DECK DRAIN BOX OUTS.

PAY QUANTITIES WILL NOT BE ADJUSTED AS A RESULT OF SELECTING THIS ALTERNATE.

USE A SIMILAR METHOD FOR TALLER RAILINGS OR MODIFIED VERSIONS OF THIS RAILING.

APPROVED: NOVEMBER 22, 2002	STATE OF MINNESOTA DEPARTMENT OF TRANSPORTATION	REVISION 4-17-2013	DETAIL NO.
Daniel L. Dorgan STATE BRIDGE ENGINEER	CONCRETE RAILING (TYPE F) (SLIPFORM ALTERNATE)		B830

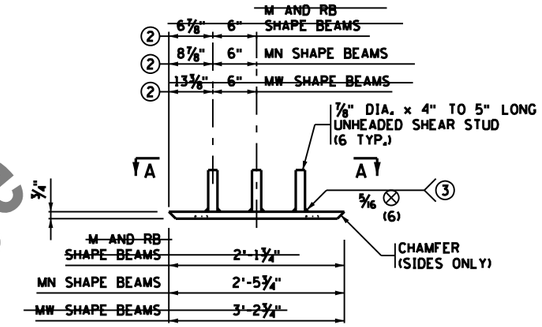

FRONT ELEVATION

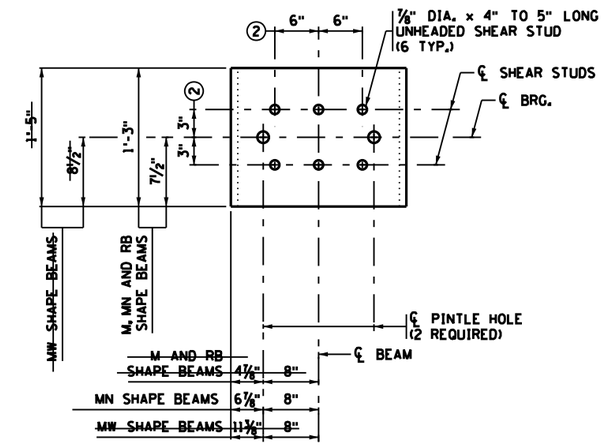

SECTION A-A

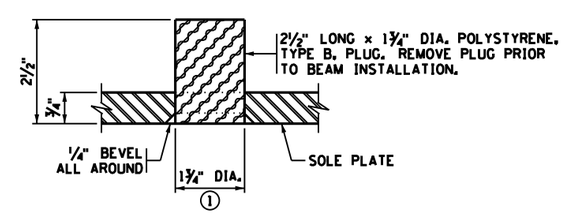

PINTLE HOLE DETAIL

NOTES:

MATERIAL TO BE STRUCTURAL STEEL PER MnDOT SPEC. 3306.

WELDED STUDS TO BE WELDABLE CARBON STEEL PER MnDOT SPEC. 3391.2D.

SOLE PLATE FOR BEARING ASSEMBLY TO BE GALVANIZED PER MnDOT SPEC. 3394 AFTER FABRICATION.

PINTLE HOLES SHALL BE FREE OF ZINC BUILD UP FROM GALVANIZING.

SOLE PLATES ARE INCIDENTAL TO PRESTRESSED CONCRETE BEAMS.

1 FOR 1 1/2" DIA. PINTLES.

2 THESE DIMENSIONS MAY BE MODIFIED TO CLEAR PRESTRESSED STRANDS. HOWEVER, CHANGES MUST BE APPROVED BY THE ENGINEER.

3 THE REQUIREMENTS FOR WELDING STUDS SHALL COMPLY WITH AASHTO/AWS D1.1.

APPROVED: SEPTEMBER 22, 2011	STATE OF MINNESOTA DEPARTMENT OF TRANSPORTATION	REVISED	DETAIL NO.
Nancy Daubenberger STATE BRIDGE ENGINEER	SOLE PLATE (PRESTRESSED CONCRETE BEAMS) (FOR BEARINGS WITH PINTLES)		B303

Preliminary Design Subject to Change

NO	DATE	BY	CHK	REVISIONS

I HEREBY CERTIFY THAT THIS PLAN WAS PREPARED BY ME OR UNDER MY DIRECT SUPERVISION AND THAT I AM A DULY LICENSED PROFESSIONAL ENGINEER UNDER THE LAWS OF THE STATE OF MINNESOTA.

LICENSED PROFESSIONAL ENGINEER: CARL OSBERG
DATE: 8/12/2016 REG NO: 42732

WSB & Associates, Inc.
701 Xenia Avenue South, Suite 300
Minneapolis, MN 55416
www.wsbeng.com
763-541-4800 - Fax 763-541-1700
INFRASTRUCTURE • ENGINEERING • PLANNING • CONSTRUCTION

BLUE EARTH COUNTY
MINNESOTA PROJ. NO. STP SM
STATE PROJECT NO. 0704-07051

TITLE: BRIDGE DETAILS

DES: JH	DR: DJV	APPROVED:	Bridge No. 07051
CHK: CBO	CHK: CBO		
Sheet 47 of 54 Sheets			

7/28/2016 10:35:45 AM
K:\03265-000\Cad\Plan\cbr07051_detail2.dgn

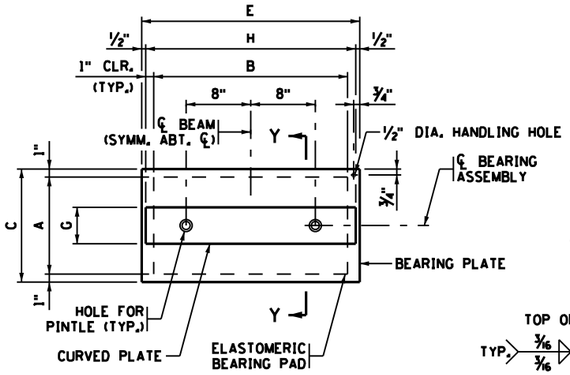

PLAN

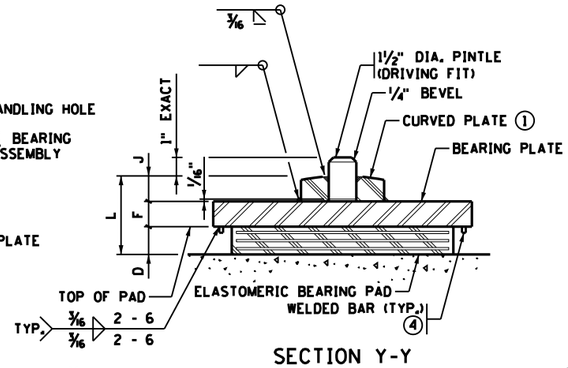

SECTION Y-Y

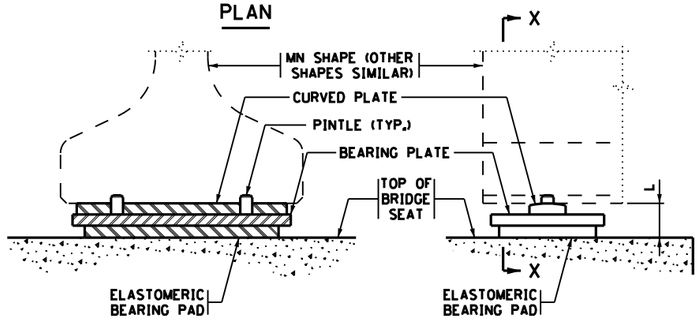

SECTION X-X

SIDE ELEVATION

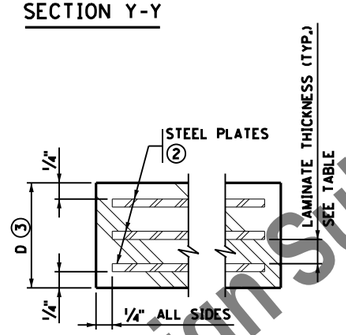

SECTION THROUGH ELASTOMERIC BEARING PAD

TABLE																		
ASSEMBLY TYPE	LOCATION	BEAM SIZE	BEARING PAD SIZE			STEEL PLATES		LAMINATES		SHAPE FACTOR	BEARING PLATE SIZE			CURVED PLATE SIZE			ASSY. HEIGHT	CURVED PLATE
			A	B	D	NO.	THICK.	NO.	THICK.		C	E	F	G	H	J	L	R ①
E1	ABUTS.	MN63	12"	24"	3⅛"	5	⅛"	4	½"	8.0	14"	27"	1½"	4½"	26"	1¼"	5⅞"	16"
—	—	~~MW~~	~~16"~~	~~36"~~	—	—	⅛"	—	½"	—	~~18"~~	~~39"~~	~~1½"~~	~~4½"~~	~~38"~~	~~1¼"~~	—	—

NOTES:

PROVIDE ELASTOMERIC MATERIALS AND PAD CONSTRUCTION PER SPEC. 3741.

PROVIDE STEEL PLATES PER SPEC. 3306.

PROVIDE PINTLES PER SPEC. 3309.

GALVANIZE STRUCTURAL STEEL BEARING ASSEMBLY AFTER FABRICATION PER SPEC. 3394, EXCEPT AS NOTED.

PAYMENT FOR BEARING ASSEMBLY INCLUDES ALL MATERIAL ON THIS DETAIL.

① THE MIN. RADIUS IS 16" UNLESS OTHERWISE SPECIFIED IN THE TABLE. THE MAX. RADIUS IS 24". FINISH TO 250 MICRO. THE FINISHED THICKNESS OF THE PLATE MAY BE 1/16" LESS THAN SHOWN.

② DO NOT GALVANIZE THESE PLATES.

③ THE TOTAL THICKNESS SHOWN INCLUDES THE STEEL PLATES.

④ ⅜" X ⅜" BAR INSTALLED ON BEARING PLATE AROUND PERIMETER OF BEARING PAD. BAR LENGTH IS 2" LESS THAN ADJACENT PAD DIMENSION, CENTERED ON PAD. CENTERLINE OF BAR TO EDGE OF PAD DIMENSION = ½".

DESIGN DATA:
MAXIMUM HORIZONTAL LOAD IS 70 KIPS FOR 1½" PINTLES.

APPROVED: SEPTEMBER 22, 2011
Nancy Daubenberger
STATE BRIDGE ENGINEER

STATE OF MINNESOTA
DEPARTMENT OF TRANSPORTATION

CURVED PLATE BEARING ASSEMBLY
(PRESTRESSED CONCRETE BEAMS)
(EXPANSION)

REVISED 11-03-2015

DETAIL NO. B311

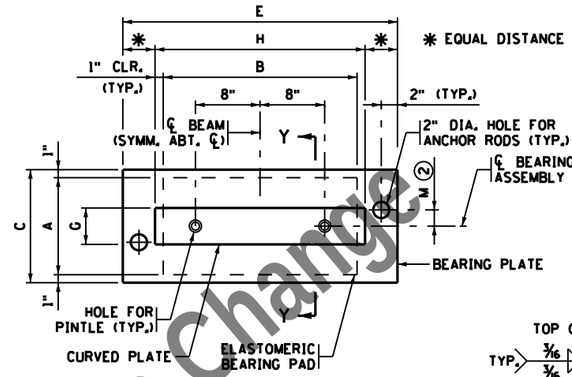

PLAN

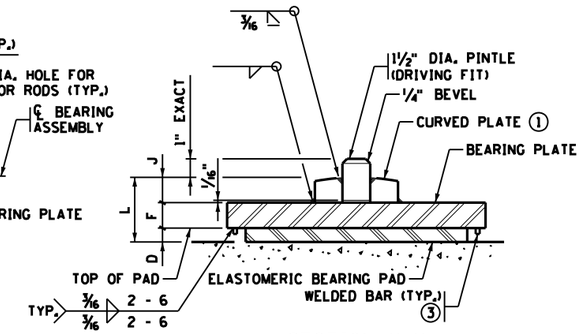

SECTION Y-Y

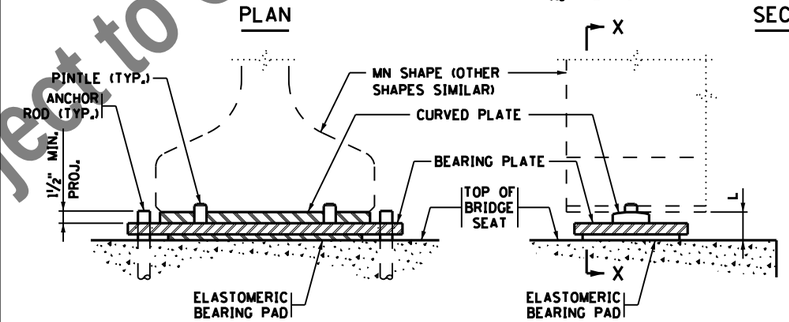

SECTION X-X

SIDE ELEVATION
ANCHOR RODS NOT SHOWN

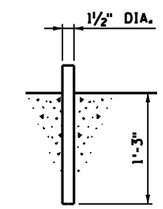

ANCHOR ROD DETAIL

TABLE																		
	ASSEMBLY TYPE	LOCATION	BEAM SIZE	BEARING PAD SIZE			SHAPE FACTOR	BEARING PLATE SIZE			CURVED PLATE SIZE			ANCHOR ROD OFFSET		ASSY. HEIGHT	CURVED PLATE
				A	B	D		C	E	F	G	H	J	+/- ②	M	L	R ①
SPANS 1 & 3	F1	PIERS	MN63	12"	24	½"	8.0	14"	38"	1¾"	4½"	26"	1¼"	___	___	3½"	16"
SPAN 2	F2	PIERS	MN63	14"	24	½"	8.82	16"	38"	1¾"	4½"	26	1¼"	___	___	3½"	16"

NOTES:

PROVIDE ELASTOMERIC MATERIALS AND PAD CONSTRUCTION PER SPEC. 3741.

PROVIDE STEEL PLATES PER SPEC. 3306.

PROVIDE ANCHOR RODS PER SPEC. 3385, TYPE A. GALVANIZE PER SPEC. 3392.

PROVIDE PINTLES PER SPEC. 3309.

GALVANIZE STRUCTURAL STEEL BEARING ASSEMBLY AFTER FABRICATION PER SPEC. 3394, EXCEPT AS NOTED.

PAYMENT FOR BEARING ASSEMBLY INCLUDES ALL MATERIAL ON THIS DETAIL.

① THE MIN. RADIUS IS 16" UNLESS OTHERWISE SPECIFIED IN THE TABLE. THE MAX. RADIUS IS 24". FINISH TO 250 MICRO. THE FINISHED THICKNESS OF THE PLATE MAY BE 1/16" LESS THAN SHOWN.

② "+" DENOTES OFFSET AS SHOWN.
"-" DENOTES OFFSET OPPOSITE OF SHOWN.

③ ⅜" X ⅜" BAR INSTALLED ON BEARING PLATE AROUND PERIMETER OF BEARING PAD. BAR LENGTH IS 2" LESS THAN ADJACENT PAD DIMENSION, CENTERED ON PAD. CENTERLINE OF BAR TO EDGE OF PAD DIMENSION = ½".

DESIGN DATA:
MAXIMUM HORIZONTAL LOAD IS 70 KIPS FOR 1½" PINTLES.

APPROVED: SEPTEMBER 22, 2011
Nancy Daubenberger
STATE BRIDGE ENGINEER

STATE OF MINNESOTA
DEPARTMENT OF TRANSPORTATION

CURVED PLATE BEARING ASSEMBLY
(PRESTRESSED CONCRETE BEAMS)
(FIXED)

REVISED 11-06-2013 11-03-2015

DETAIL NO. B310

Preliminary Design Subject to Change

NO	DATE	BY	CHK	REVISIONS

I HEREBY CERTIFY THAT THIS PLAN WAS PREPARED BY ME OR UNDER MY DIRECT SUPERVISION AND THAT I AM A DULY LICENSED PROFESSIONAL ENGINEER UNDER THE LAWS OF THE STATE OF MINNESOTA.

LICENSED PROFESSIONAL ENGINEER: CARL OSBERG
DATE: 8/12/2016 REG NO: 42732

WSB & Associates, Inc.
701 Xenia Avenue South, Suite 300
Minneapolis, MN 55416
www.wsbeng.com
763-541-4800 - Fax 763-541-1700
INFRASTRUCTURE • ENGINEERING • PLANNING • CONSTRUCTION

BLUE EARTH COUNTY
MINNESOTA PROJ. NO. STP SM
STATE PROJECT NO. 0704-07051

TITLE: BRIDGE DETAILS

DES: JH	DR: DJV	APPROVED:
CHK: CBO	CHK: CBO	

Sheet 48 of 54 Sheets

Bridge No. 07051

7/28/2016 10:35:45 AM
K:\03265-000\Cad\Plan\cbr-0705l_detail3.dgn

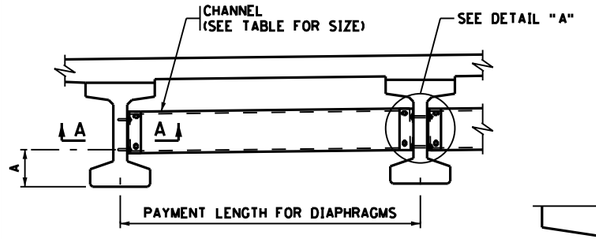

PART TRANSVERSE SECTION AT DIAPHRAGM

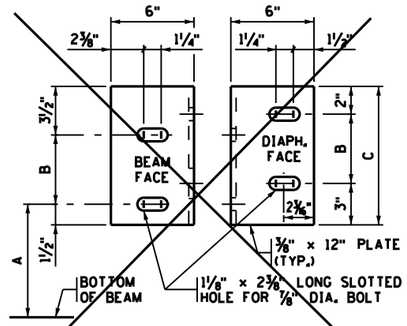

DIAPHRAGM CONNECTION

FOR 36M, AND MN45 BEAMS

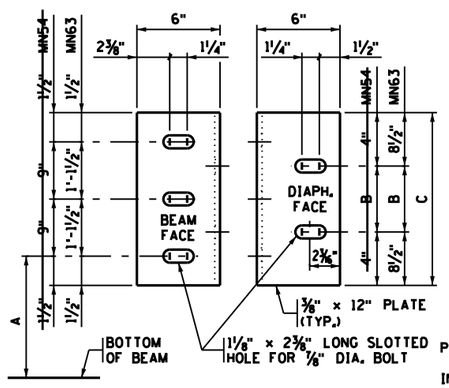

DIAPHRAGM CONNECTION

FOR MN54 AND MN63 BEAMS

TABLE				
BEAM HEIGHT	DISTANCE			CHANNEL SIZE
	A	B	C	
~~36M~~	~~1'-3"~~	~~7"~~	~~1'-0"~~	~~C12x20.7~~
~~MN45~~	~~1'-7¾"~~	~~7"~~	~~1'-0"~~	~~C12x20.7~~
~~MN54~~	~~1'-7¾"~~	~~1'-1"~~	~~1'-9"~~	~~MC18x42.7~~
MN63	1'-7¾"	1'-1"	2'-6"	MC18x42.7

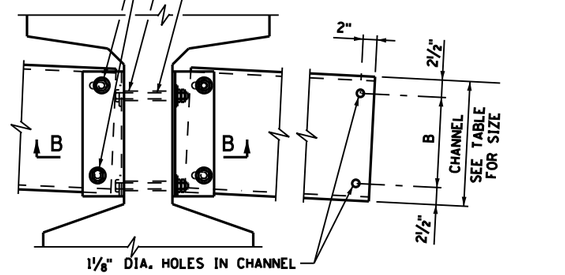

DETAIL "A"

~~INTERIOR BEAM WITH CONTINUOUS LINE OF DIAPHRAGMS~~

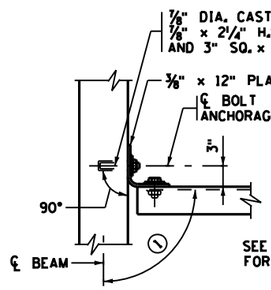

SECTION A-A

TYPICAL SECTION AT ALL FASCIA BEAMS

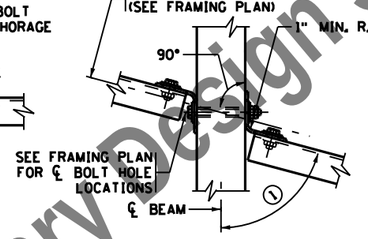

SECTION B-B

TYPICAL SECTION AT INTERIOR BEAM WITH CONTINUOUS OR STAGGERED INTERMEDIATE DIAPHRAGMS

NOTES:

PROVIDE STEEL PER SPEC. 3306.

INSTALL PER SPEC. 2405.3.K.

TORQUE ALL BOLTS, INCLUDING ANCHOR BOLTS TO 80 FT.-LBS.

SHOP BEND THE LEG OF THE 12" PLATE TO CONFORM TO THE DIAPHRAGM. A ⅜" x 6" x 6" ANGLE MAY BE USED FOR DIAPHRAGMS PERPENDICULAR TO BEAMS.

INCLUDE ALL STRUCTURAL STEEL SHOWN ON THIS DETAIL, INCLUDING BOLTS AND WASHERS, IN UNIT PRICE BID FOR DIAPHRAGMS FOR PRESTRESSED BEAMS.

BENT PLATES MAY BE USED IN PLACE OF CHANNELS IF THE BENT PLATES HAVE THE SAME HEIGHT AS THE CHANNELS THEY REPLACE, ARE 5/16" IN THICKNESS, AND HAVE LEGS 5" LONG.

GALVANIZE STEEL PLATES AND SHAPES PER SPEC. 3394.

GALVANIZE BOLTS, NUTS AND WASHERS PER SPEC. 3392.

① FOR SKEW ANGLES UNDER 20°, USE 90° LESS THE SKEW ANGLE. FOR SKEW ANGLES OVER 20°, USE 90°.

APPROVED: NOVEMBER 03, 2015	STATE OF MINNESOTA DEPARTMENT OF TRANSPORTATION	REVISED	DETAIL NO.
STATE BRIDGE ENGINEER	STEEL INTERMEDIATE DIAPHRAGM (FOR 36M, MN45 - MN63 PRESTRESSED CONCRETE BEAMS)		B403

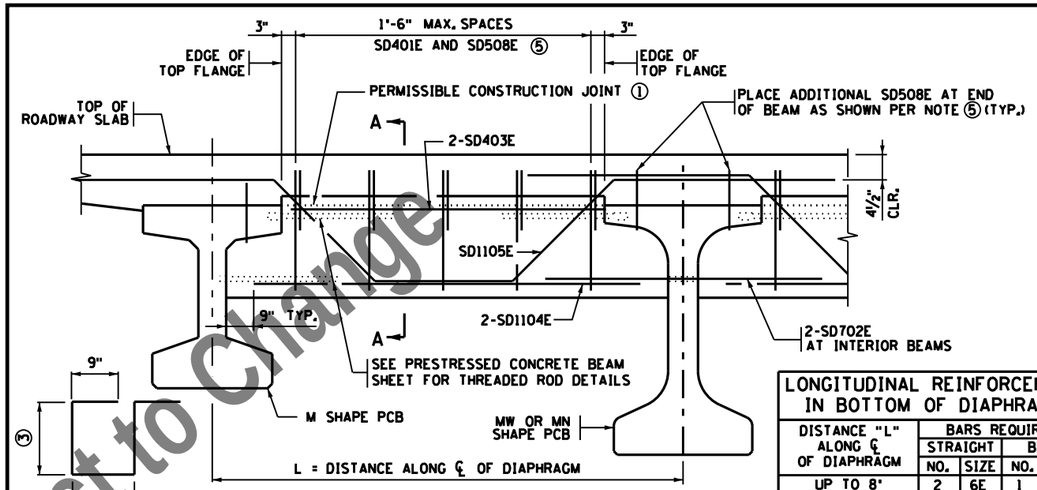

PART TRANSVERSE SECTION

(L > 8' SHOWN)

LONGITUDINAL REINFORCEMENT IN BOTTOM OF DIAPHRAGM				
DISTANCE "L" ALONG ℄ OF DIAPHRAGM	BARS REQUIRED			
	STRAIGHT		BENT	
	NO.	SIZE	NO.	SIZE
UP TO 8'	2	6E	1	5E
OVER 8' TO 11'	2	7E	1	6E
OVER 11' TO 13'	2	8E	1	8E
OVER 13' TO 15'	2	9E	1	10E
OVER 15' TO 18'	2	11E	1	11E

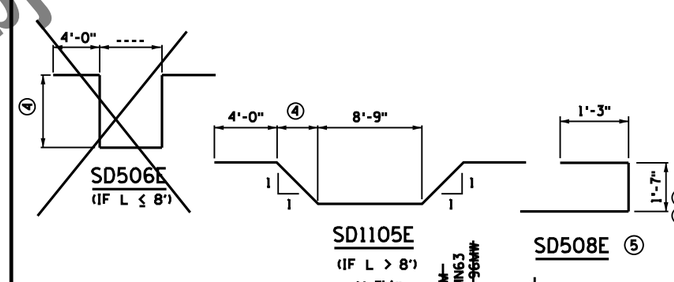

BILL OF REINFORCEMENT FOR END DIAPHRAGM				
BAR	NO.	LENGTH	SHAPE	LOCATION
SD401E	42	7'-9"		VERTICAL TIE
SD702E	16	5'-0"		LONG. THRU BEAM
SD403E	12	13'-3"		LONG. TOP
SD1104E	12	15'-5"		LONG. BOTTOM
SD1105E	6	23'-4"		LONGITUDINAL
SD507E	4	28'-0"		LONGITUDINAL
SD508E	42	4'-7'		VERTICAL TIE

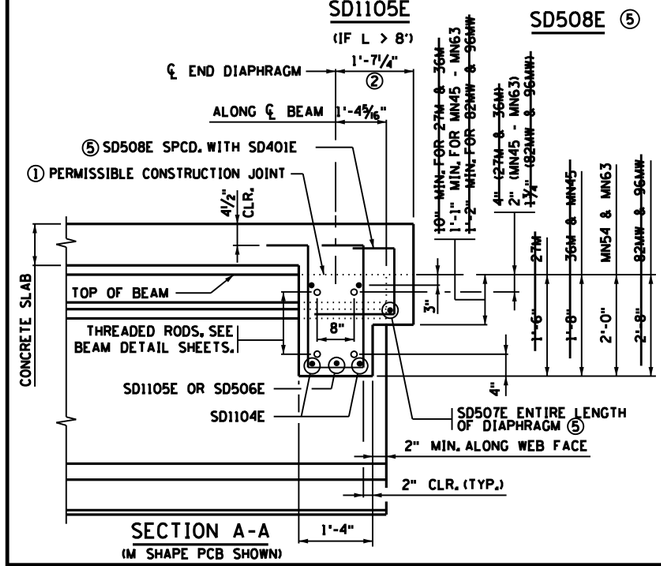

SECTION A-A

(M SHAPE PCB SHOWN)

NOTES:

CONCRETE FOR END DIAPHRAGMS SHALL BE THE SAME MIX AS USED IN DECK.

QUANTITIES FOR END DIAPHRAGM CONCRETE AND REINFORCEMENT SHOWN ON THIS DETAIL SHALL BE LISTED IN SUPERSTRUCTURE QUANTITIES.

THREADED RODS ARE INCIDENTAL TO PRESTRESSED CONCRETE BEAMS.

① USE OF CONSTRUCTION JOINT REQUIRES CLEARANCE FOR EXPANSION DEVICE. WHEN CONSTRUCTION JOINT IS USED AT THIS LOCATION, DIAPHRAGM FALSEWORK SHALL REMAIN INPLACE UNTIL COMPLETION OF SLAB CURING PERIOD.

② PERPENDICULAR TO CENTERLINE OF DIAPHRAGM.

③ 1'-11" (27M); 2'-1" (36M AND MN45); 2'-5" (MN54 AND MN63); 3'-1" (82MW AND 96MW). BASED ON 3" STOOL AND 9" DECK.

④ 1'-10" (27M); 2'-0" (36M AND MN45); 2'-4" (MN54 AND MN63); 3'-0" (82MW AND 96MW). BASED ON NOTE ③.

⑤ ADD SD507E AND SD508E ONLY IF NO. OF BARS AND LENGTHS ARE INCLUDED IN BILL OF REINFORCEMENT. SPACE SD508E AT 1'-6" MAX. FOR ENTIRE LENGTH OF DIAPHRAGM. REFER TO "PART TRANSVERSE SECTION" ABOVE.

APPROVED: SEPTEMBER 22, 2011	STATE OF MINNESOTA DEPARTMENT OF TRANSPORTATION	REVISED	DETAIL NO.
STATE BRIDGE ENGINEER	CONCRETE END DIAPHRAGM (27M & 36M, MN45 - MN63, 82MW & 96MW PRESTRESSED CONCRETE BEAMS) (PARAPET ABUTMENT)	04-17-2013 11-06-2013	B814

Preliminary Design Subject to Change

7/28/2016 10:35:45 AM
K:\03265-000\Cad\Plan\cbr0705l_detail4.dgn

NO	DATE	BY	CHK	REVISIONS

I HEREBY CERTIFY THAT THIS PLAN WAS PREPARED BY ME OR UNDER MY DIRECT SUPERVISION AND THAT I AM A DULY LICENSED PROFESSIONAL ENGINEER UNDER THE LAWS OF THE STATE OF MINNESOTA.

LICENSED PROFESSIONAL ENGINEER: CARL OSBERG
DATE: 8/12/2016 REG NO: 42732

WSB & Associates, Inc.
701 Xenia Avenue South, Suite 300
Minneapolis, MN 55416
www.wsbeng.com
763-541-4800 - Fax 763-541-1700
INFRASTRUCTURE • ENGINEERING • PLANNING • CONSTRUCTION

BLUE EARTH COUNTY
MINNESOTA PROJ. NO. STP SM
STATE PROJECT NO. 0704-07051

TITLE: BRIDGE DETAILS

DES: JH	DR: DJV	APPROVED:	Bridge No. 07051
CHK: CBO	CHK: CBO		
Sheet 49 of 54 Sheets			

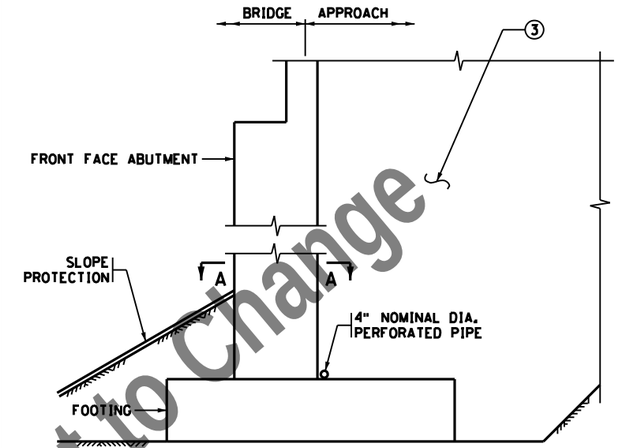

SECTION THROUGH PARAPET AND SEMI-INTEGRAL ABUTMENTS

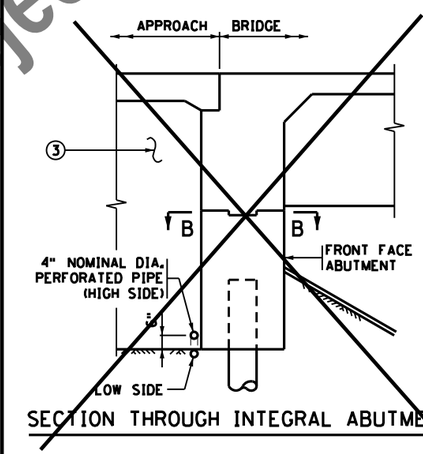

SECTION THROUGH INTEGRAL ABUTMENT

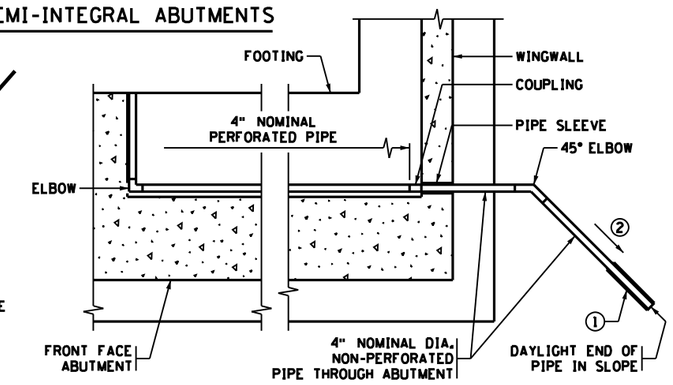

SECTION A-A

SEE SHTS. 5 & 15 FOR PIPE LAYOUT

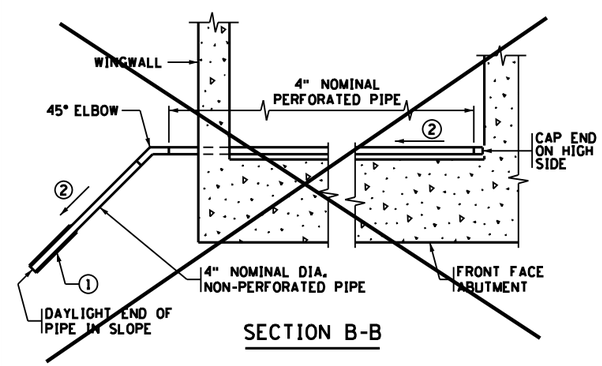

SECTION B-B

NOTES:

PAYMENT WILL BE INCLUDED IN THE SINGLE LUMP SUM PRICE FOR "DRAINAGE SYSTEM TYPE (B910)". INCLUDES BUT IS NOT LIMITED TO 4" DIAMETER PERFORATED AND NON-PERFORATED PIPE, ELBOWS, END CAPS, COUPLINGS, SLEEVES AND PRECAST CONCRETE HEADWALLS.

ALL PIPE TO COMPLY WITH SPEC. 3245.

WRAP PERFORATED PIPE WITH GEOTEXTILE PER SPEC. 3733, TYPE 1. ATTACH TO PIPE PER SPEC. 2502.

① AT CONTRACTOR'S OPTION, MAY TIE APPROACH PANEL DRAINAGE SYSTEM AND ABUTMENT DRAINAGE SYSTEM INTO A SINGLE PRECAST CONCRETE HEADWALL OR INTO A CATCH BASIN AS LONG AS A MINIMUM OF 1% POSITIVE SLOPE CAN BE MAINTAINED.

USE PRECAST CONCRETE HEADWALL WITH RODENT SCREEN. SEE STANDARD PLATE 3131 FOR DETAILS.

② 1/8" PER FT. MINIMUM SLOPE.

③ REFER TO GRADING PLANS FOR ABUTMENT BACKFILL REQUIREMENTS.

APPROVED: JANUARY 13, 2015	STATE OF MINNESOTA DEPARTMENT OF TRANSPORTATION	REVISED 12-02-2015	DETAIL NO.
Nancy Daubenberger STATE BRIDGE ENGINEER	DRAINAGE SYSTEM		B910

Preliminary Design Subject to Change

NO	DATE	BY	CHK	REVISIONS

I HEREBY CERTIFY THAT THIS PLAN WAS PREPARED BY ME OR UNDER MY DIRECT SUPERVISION AND THAT I AM A DULY LICENSED PROFESSIONAL ENGINEER UNDER THE LAWS OF THE STATE OF MINNESOTA.

LICENSED PROFESSIONAL ENGINEER: CARL OSBERG
DATE: 8/12/2016 REG NO: 42732

WSB & Associates, Inc.
701 Xenia Avenue South, Suite 300
Minneapolis, MN 55416
www.wsbeng.com
763-541-4800 - Fax 763-541-1700
INFRASTRUCTURE • ENGINEERING • PLANNING • CONSTRUCTION

BLUE EARTH COUNTY
MINNESOTA PROJ. NO. STP SM
STATE PROJECT NO. 0704-07051

TITLE: BRIDGE DETAILS

DES: JH	DR: DJV	APPROVED:
CHK: CBO	CHK: CBO	

Sheet 50 of 54 Sheets

Bridge No. 07051

7/28/2016 10:35:46 AM
K:\03265-000\Cad\Plan\cbr-07051_details.dgn

CONCRETE WEARING COURSE

☐ LOW SLUMP

☐ OTHER _____
TYPE OR MANUFACTURER

EXPANSION JOINTS

JOINT MANUFACTURER

MANUFACTURER'S IDENTIFICATION _____
MFR'S No. AND/OR LETTER DESIGNATION FOR JOINT USED

GLAND MANUFACTURER _____
NAME AND ADDRESS (CITY, STATE)

SIZE OF GLAND _____

MANUFACTURER'S IDENTIFICATION _____
MFR'S No. AND/OR LETTER DESIGNATION FOR GLAND USED

ELASTOMERIC BEARING PADS

PAD MANUFACTURER _____
NAME AND ADDRESS (CITY, STATE)

SPECIAL SURFACE FINISH

SYSTEM: _____ COLOR: _____

FINISHING ROADWAY FACES OF BARRIER RAILING

TYPE: _____ COLOR: _____

ANTI-GRAFFITI COATING

MANUFACTURER _____
NAME AND ADDRESS (CITY, STATE)

PRODUCT NAME: _____ LOCATION: _____

PAINT SYSTEM

Mn/DOT SPECIFICATION NUMBER _____
2478 OR 2479 OR OTHER

MANUFACTURER _____
NAME AND ADDRESS (CITY, STATE)

PRIME COAT _____
Mn/DOT MATERIAL SPECIFICATION NUMBER

INTERMEDIATE COAT _____
Mn/DOT MATERIAL SPECIFICATION NUMBER

FINISH COAT _____ _____
Mn/DOT MATERIAL SPECIFICATION NUMBER COLOR

PLAN QUALITY

RATE 1 (AGREE), 2 (NEUTRAL), OR 3 (DISAGREE. PLEASE COMMENT BELOW)

DIMENSIONING AND DETAILING ADEQUATELY DESCRIBED REQUIRED CONSTRUCTION. _____

BAR LISTS AND QUANTITIES WERE TYPICALLY COMPLETE AND FREE OF ERRORS. _____

SCALE OF DRAWINGS AND OVERALL LEGIBILITY OF LINES AND TEXT WAS GOOD. _____

(SB) SPECIAL PROVISIONS ADEQUATELY DESCRIBED SPECIAL WORK AND PAYMENT. _____

COMMENTS: _____

NUMBER OF BRIDGE SUPPLEMENTAL AGREEMENTS: _____ COST: $ _____

LIST SIGNIFICANT ERRORS OR OMISSIONS IN PLAN DETAILS OR PAY QUANTITIES IN THE SPACE PROVIDED AT RIGHT.

BRIDGE REMOVAL / BRIDGE OPENING

NUMBER OF AND DATE OLD BRIDGE WAS REMOVED (IF APPLICABLE):

BRIDGE NUMBER _____ DATE REMOVED _____

DATE NEW BRIDGE WAS OPENED TO TRAFFIC _____

NOTIFY THE BRIDGE OFFICE BRIDGE MANAGEMENT UNIT WITH THIS INFORMATION AS SOON AS POSSIBLE. (651) 366-4557

OTHER ITEMS ①

① UTILITIES ADDED DURING CONSTRUCTION AND SPECIALTY ITEMS.

FINAL QUANTITIES ENTERED ON SCHEDULE OF QUANTITIES: YES ☐ NO ☐

SUMMARY OF SIGNIFICANT AS-BUILT CHANGES

THE AS-BUILT INFORMATION WAS ADDED TO THE PLAN BY:

_____ _____
INSPECTOR(S) SIGNATURE DATE

CHECKED BY: _____ _____
PROJECT ENGINEER/SUPERVISOR SIGNATURE DATE

AT THE TIME OF THE FINAL, THIS COMPLETED AS-BUILT BRIDGE DATA SHEET MUST BE SUBMITTED TO THE BRIDGE OFFICE - ATTN: REGIONAL CONSTRUCTION ENGINEER (MS610).

AS-BUILT DETAILS
(AS NEEDED)

Preliminary Design Subject to Change

REVISION: 10-28-2008

APPROVED: SEPTEMBER 26, 2003

STATE BRIDGE ENGINEER

FIG. 5-397.900

NO	DATE	BY	CHK	REVISIONS

I HEREBY CERTIFY THAT THIS PLAN WAS PREPARED BY ME OR UNDER MY DIRECT SUPERVISION AND THAT I AM A DULY LICENSED PROFESSIONAL ENGINEER UNDER THE LAWS OF THE STATE OF MINNESOTA.

LICENSED PROFESSIONAL ENGINEER: CARL OSBERG
DATE: 8/12/2016 REG NO: 42732

WSB & Associates, Inc.
701 Xenia Avenue South, Suite 300
Minneapolis, MN 55416
www.wsbeng.com
763-541-4800 - Fax 763-541-1700
INFRASTRUCTURE • ENGINEERING • PLANNING • CONSTRUCTION

BLUE EARTH COUNTY
MINNESOTA PROJ. NO. STP SM
STATE PROJECT NO. 0704-07051

TITLE: AS-BUILT DATA

DES: JH	DR: DJV	APPROVED:	Bridge No. 07051
CHK: CBO	CHK: CBO		

Sheet 51 of 54 Sheets

CONTRACTED PROFILE

SCALE : 0 25' 50' HORIZONTAL 0 2.5' 5' VERTICAL

PROFILE GRADE T.H. 22 (PPTH22GA)

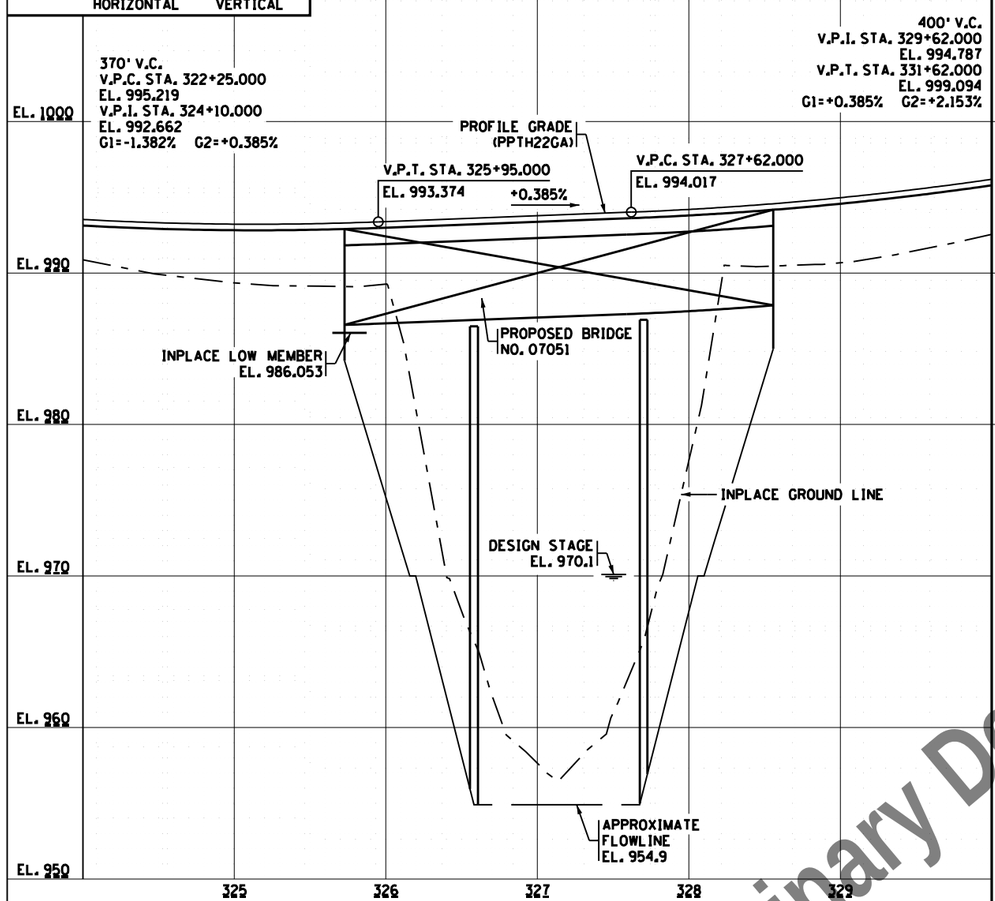

PLAT

SCALE: 0 25' 50'

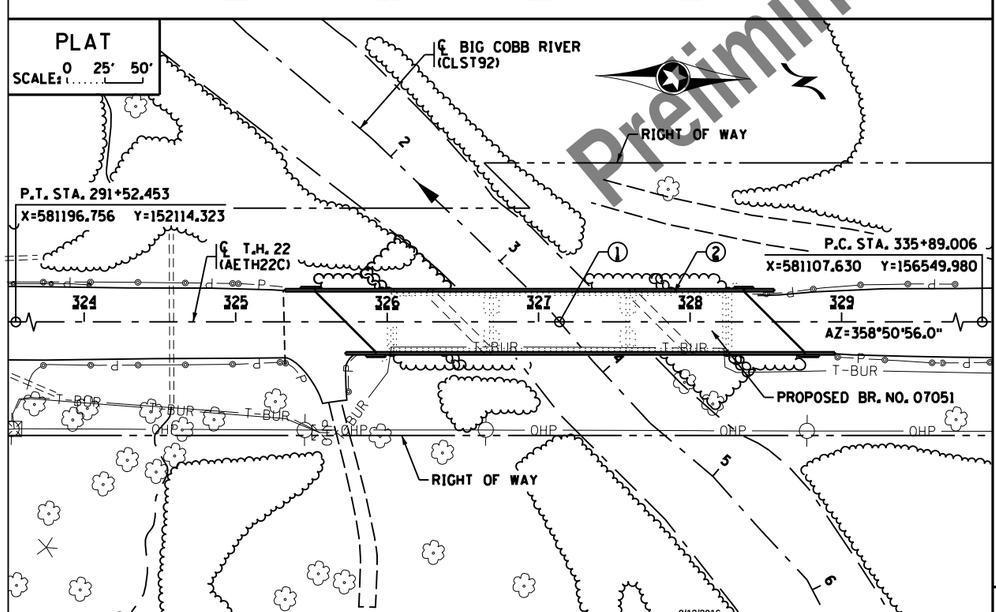

TYPICAL SECTIONS & PERTINENT DATA

SCALES AS SHOWN

PROFILE GRADE BIG COBB RIVER (CLST92)

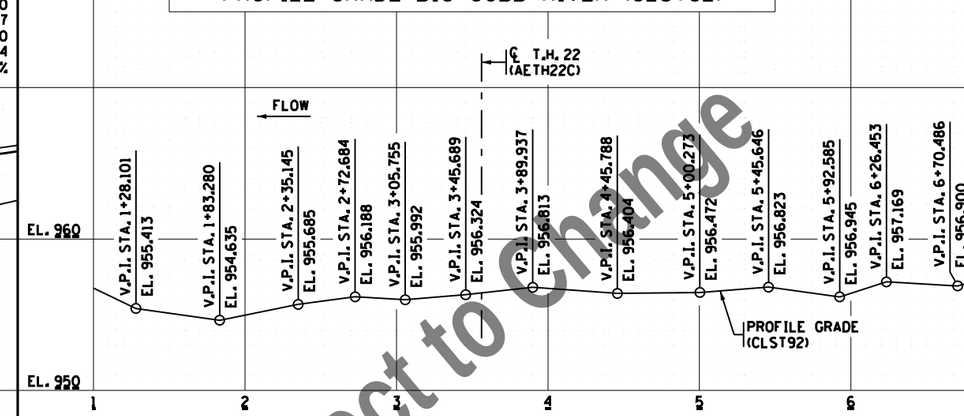

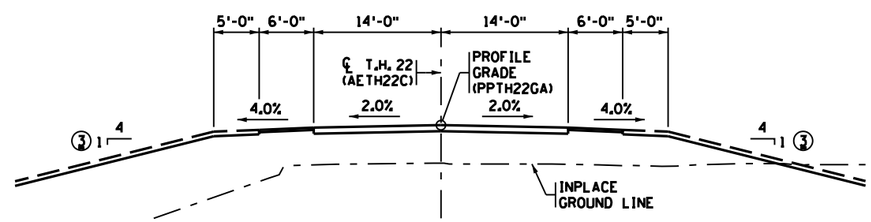

TYPICAL ROADWAY SECTION

NOTES:

SEE SHEET 53 FOR COMPLETE INPLACE UTILITIES.

① ℄ T.H. 22 (AETH22C) P.O.T. STA. 327+13.796 = ℄ BIG COBB RIVER (CLST92) P.O.T. STA. 3+56.129 X=581125.212 Y=155674.947

② INPLACE BRIDGE NO. 5959 BUILT IN 1941 3 CONTINUOUS STEEL BEAM SPANS 223'-0" LONG X 38'-2" WIDE SUPPORTED ON TREATED TIMBER PILES (ABUTMENTS) AND UNTREATED TIMBER PILES (PIERS) TO BE REMOVED UNDER BRIDGE PORTION OF CONTRACT.

③ SIDE SLOPE BREAKS TO 3H:1V AT 58'-0" FROM ℄ OF T.H. 22.

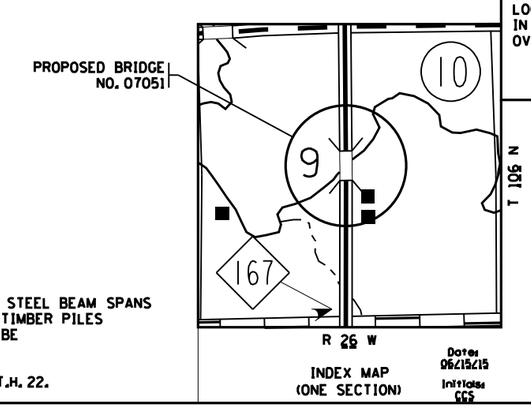

LOCATION ENGINEER'S OBSERVATIONS AT BRIDGE SITE

1. SPECIAL FEATURES:
2. OTHER BRIDGES OR CULVERTS OVER THE SAME STREAM (PARTICULARLY STRUCTURES WHICH CARRY HIGH WATER WITHOUT OVERFLOW OF ROADWAY):
3. APPARENT HIGHWATER ELEVATION _____ OBTAINED FROM:
4. OTHER DATA:

HYDRAULIC ENGINEERS RECOMMENDATION

DATE: 05-15-15

STREAM OR DITCH DESIGNATION: BIG COBB RIVER
DRAINAGE AREA: 278 SQ. MI.
MAX. FLOOD ON RECORD: N/A C.F.S.
MAXIMUM OBSERVED HIGHWATER ELEVATION: N/A FT.
DESIGN FLOOD (50 YR. FREQ.): 6350 C.F.S.
HEADWATER ELEVATION: 970.2 FT.
DESIGN MEAN VELOCITY THROUGH STRUCTURE: 4.9 F.P.S.
TOTAL STAGE INCREASE: 0.1 FT.
LOW MEMBER AT OR ABOVE ELEVATION: 973.2 FT.
WATERWAY AREA REQUIRED BELOW ELEV. 969.6 = 1292 SQ. FT. AT RIGHT ANGLES TO CHANNEL
BASIC FLOOD (100 YR. FREQ.): 7850 C.F.S.
HEADWATER ELEVATION: 971.4 FT.
TOTAL STAGE INCREASE: 0.1 FT.
MEAN VELOCITY THROUGH STRUCTURE: 5.4 F.P.S.
FLOWLINE ELEVATION: 954.9 FT. SKEW ANGLE: 45°
ESTIMATED PRELIMINARY TOTAL SCOUR AT PIER EL. 939.9 (500 OR OT YR. FREQ.)

SCOUR CONFIRMATION RECOMMENDATION

DATE: 2/5/2016

TOTAL SCOUR AT PIER EL. 939.9 (500 OR OT YR. FREQ.)
SCOUR CODE: N-STABLE

BRIDGE SURVEY SHEETS MADE FROM :
GISD STATION #2385

BENCH MARK ELEVATION 1010.021 (N.A.V.D. 88 ADJ.)
LOCATION IN BEAUFORD, AT SW CORNER OF TH 22 AND CR 10 JUNCTION, AT TH 22 MILEPOINT 40.8, 50.4 FT WEST OF TH 22, 35 FT SOUTH OF CR 10, 7.5 FEET SW OF POWER POLE, .5 FOOT EAST OF WITNESS POST

2nd BENCH MARK ELEVATION 989.427 (N.A.V.D. 88 ADJ.)
LOCATION: IN BEAUFORD, .5 MI. SOUTH OF BEAUFORD, IN ABUTMENT AT S.W. CORNER OF T.H. 22, BRIDGE NO. 5959 OVER COBB RIVER, AT TH 22 MILEPOINT 40.25.

MINNESOTA DEPARTMENT OF TRANSPORTATION

BRIDGE SURVEY

PROPOSED BRIDGE LOCATED 4.8 MILES NORTH OF MAPLETON

SEC 9 T 106 N R 26 W

COUNTY: BLUE EARTH

TOWNSHIP: BEAUFORD

BRIDGE NO. 07051

Preliminary Design Subject to Change

FILENAME: $$$@FILENAME@$$$
TIME : $@TIME@$
PLOTTED : $$$$@DATE@$$$$
PATH & FILENAME: $$$@PATHFILENAME@$$$

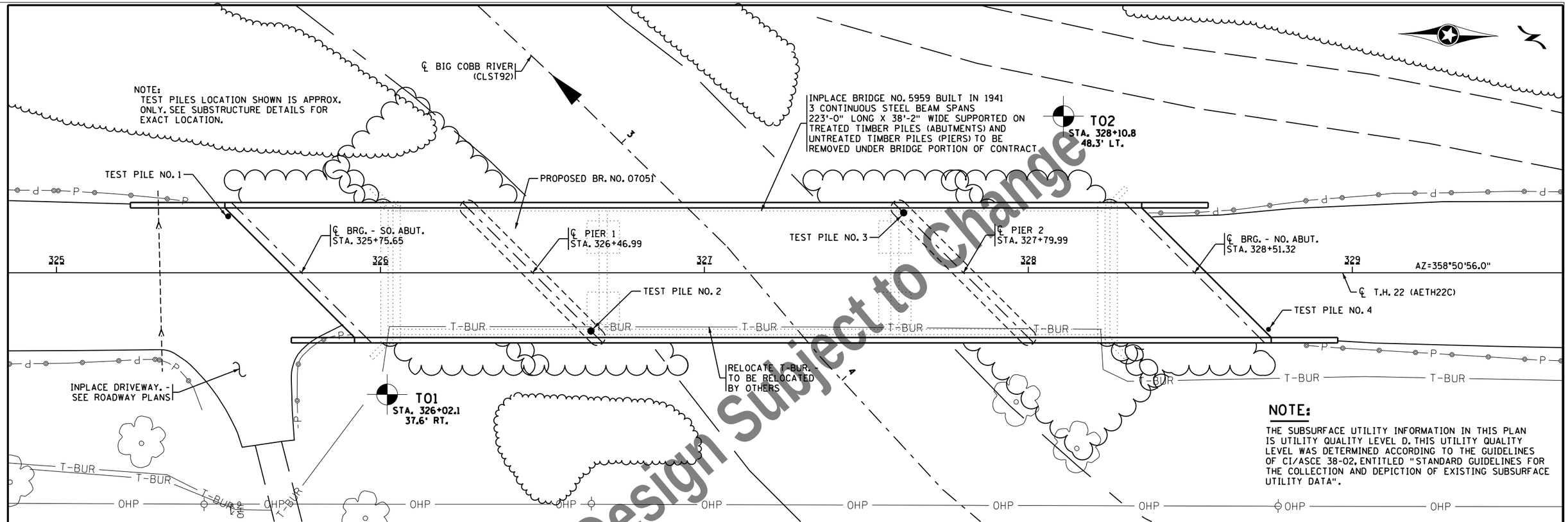

Preliminary Design Subject to Change

BORINGS

DR: DJV | CHK: CBO

STATE PROJECT NO. 0704-07051

SHEET NO. 53 OF 54 SHEETS

BRIDGE NO. 07051

7/28/2016 10:35:48 AM
K:\03265-000\Cad\Plan\cbr-07051_sur2.dgn

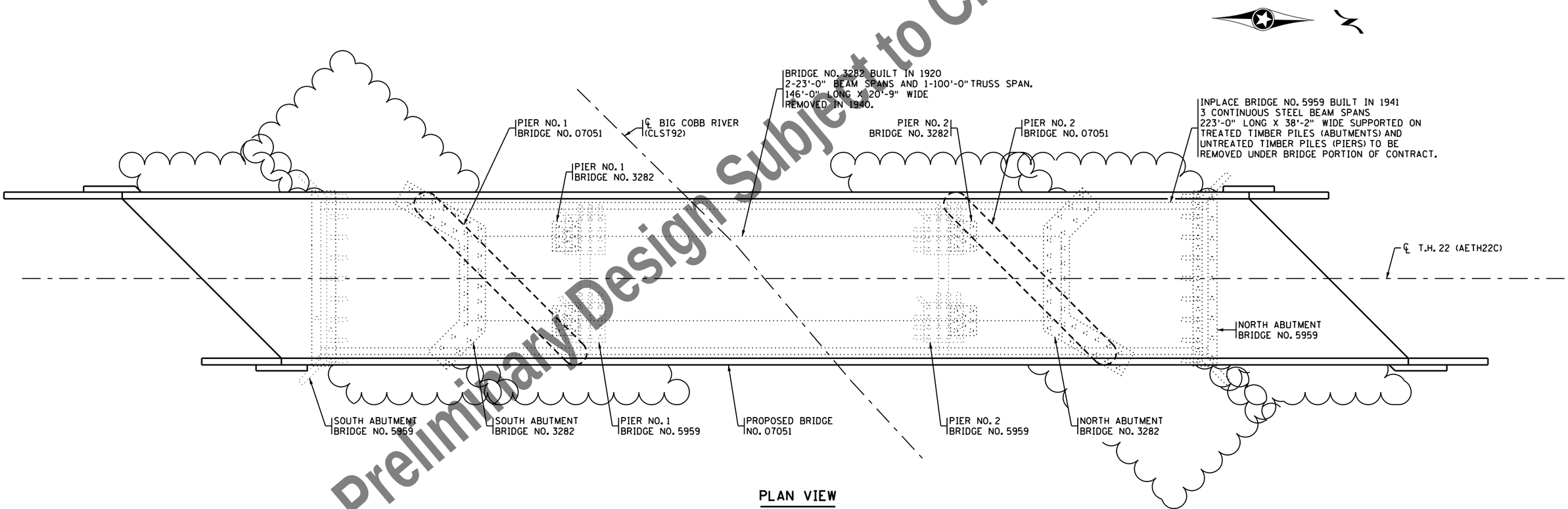

Preliminary Design Subject to Change

PLAN VIEW

NOTE:

LOCATION OF BRIDGE NO. 3282 FOOTINGS ARE APPROXIMATE.

NO	DATE	BY	CHK	REVISIONS

I HEREBY CERTIFY THAT THIS PLAN WAS PREPARED BY ME OR UNDER MY DIRECT SUPERVISION AND THAT I AM A DULY LICENSED PROFESSIONAL ENGINEER UNDER THE LAWS OF THE STATE OF MINNESOTA.

LICENSED PROFESSIONAL ENGINEER: CARL OSBERG
DATE: 8/12/2016 REG NO: 42732

WSB & Associates, Inc.
701 Xenia Avenue South, Suite 300
Minneapolis, MN 55416
www.wsbeng.com
763-541-4800 - Fax 763-541-1700
INFRASTRUCTURE • ENGINEERING • PLANNING • CONSTRUCTION

BLUE EARTH COUNTY
MINNESOTA PROJ. NO. STP SM
STATE PROJECT NO. 0704-07051

TITLE: BRIDGE SURVEY - INPLACE BRIDGES 3282 & 5959

DES: JH	DR: DJV	APPROVED:
CHK: CBO	CHK: CBO	

Sheet 54 of 54 Sheets

Bridge No. 07051

7/28/2016 10:35:49 AM
K:\03265-000\CadPlan\cbr07051_sur3.dgn