UNDERWATER BRIDGE INSPECTION REPORT

STRUCTURE NO. 38505

CSAH NO. 16

OVER

SILVER RAPIDS

DISTRICT 1 - LAKE COUNTY

PREPARED FOR THE

MINNESOTA DEPARTMENT OF TRANSPORTATION

BY

COLLINS ENGINEERS, INC.

JOB NO. 3512 (CEI 13)

MINNESOTA DEPARTMENT OF TRANSPORTATION
UNDERWATER BRIDGE INSPECTION

REPORT SUMMARY:

The substructure units inspected at Bridge No. 38505, Piers 1, 2, and 3, were found to be in good condition with only light concrete scaling. The channel bottom around the substructure units and the shorelines were all adequately protected with large rip-rap and appeared stable, with no significant changes since the previous inspection.

INSPECTION FINDINGS:

(A) There were random areas of light scaling and exposed aggregate along all faces of the piers. The scaling was most prominent around the noses from 6 inches above to 3 feet below the waterline, with maximum penetrations of 1/4 inch.

(B) The top of the footing of Pier 1 was exposed along most of the south side. The footing was flush with the channel bottom with no edge or vertical face exposure. A 4-foot-radius scour depression was observed around the footing exposure, measuring up to 0.5 feet deep with respect to the surrounding channel bottom.

RECOMMENDATIONS:

(A) Reinspect the submerged substructure units at the normal maximum recommended (NBIS) interval of five (5) years.

I hereby certify that this plan, specification, or report was prepared by me or under my direct supervision and that I am a duly Licensed Professional Engineer under the laws of the State of Minnesota.

Daniel G. Stromberg

Date 6/30/2004 Registration No. 21491

Respectfully submitted,

COLLINS ENGINEERS, INC.

Daniel G. Stromberg
Registered Professional
Engineer, State of Minnesota

MINNESOTA DEPARTMENT OF TRANSPORTATION
UNDERWATER BRIDGE INSPECTION

1. BRIDGE DATA

Bridge Number: 38505

Feature Crossed: Silver Rapids

Feature Carried: CSAH No. 16

Location: District 1 - Lake County

Bridge Description: The superstructure consists of four spans of multiple continuous steel stringers supporting a reinforced concrete deck. The superstructure is supported by two reinforced concrete abutments and three reinforced concrete piers. Design drawings provided indicate that the abutment footings are supported by steel H-piles and the pier spread footings are keyed into bedrock. The piers are numbered 1 through 3 from west to east.

2. INSPECTION DATA

Professional Engineer Diver: Daniel G. Stromberg
State of Minnesota, P.E., No. 21491

Dive Team: Michelle D. Koerbel, Matthew J. Lengyel

Date: August 29, 2002

Weather Conditions: Cloudy, ± 70° F

Underwater Visibility: ± 3.0 Feet

Waterway Velocity: ± 0.5 fps

3. SUBSTRUCTURE INSPECTION DATA

Substructure Inspected: Piers 1, 2, and 3.

General Shape: The piers consist of standard single hammerhead shafts with rounded ends, founded on rectangular footings keyed into bedrock.

Maximum Water Depth at Substructure Inspected: Approximately 8.0 Feet.

4. WATERLINE DATUM

Water Level Reference: The bridge seat at the downstream end of Pier 1.

Water Surface: The waterline was approximately 11.5 feet below reference.
Water Elevation = 1385.7.

5. NBIS CODING INFORMATION (Minnesota specific codes are used for 92B and 113)

Item 60: Substructure: Code 7

Item 61: Channel and Channel Protection: Code 7

Item 92B: Underwater Inspection: Code B/08/02

Item 113: Scour Critical Bridges: Code I/95

Bridge is scour critical because abutment or pier foundation is rated as unstable due to observed scour at bridge site.
_____ Yes ___X__No

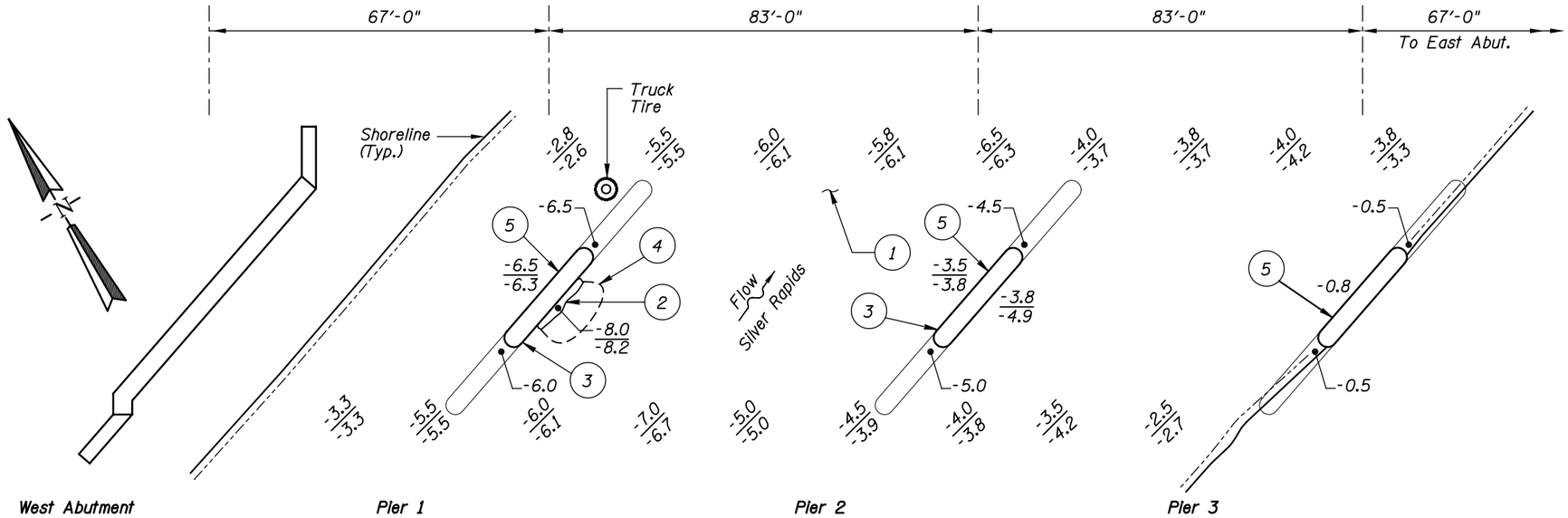

SOUNDING PLAN

GENERAL NOTES:

1. Piers 1, 2, and 3 were inspected underwater.
2. At the time of inspection on August 29, 2002, the waterline was located approximately 11.5 feet below the bridge seat at the downstream end of Pier 1. This corresponds to a waterline elevation of 1385.7 based on the previous report dated September 23, 1997.
3. Soundings indicate the water depth at the time of inspection and are measured in feet.
4. Soundings were taken parallel to the bridge at 1/4 point intervals between the substructure units.

INSPECTION NOTES:

(1) The channel bottom material consisted of large riprap with firm sandy gravel and no appreciable probe rod penetration. Riprap sizes typically ranged from approximately 6 inch to 1 foot in diameter.

(2) The top of the Pier 1 footing was exposed along most of the east side of the pier. The footing was level with the channel bottom, with a maximum width of 2 feet exposed and no edge or vertical face exposure.

(3) A band of scaling was observed around Piers 1 and 2, extending from 6 inches above the waterline to 3 feet below the waterline, with typical penetrations of 1/16 to 1/8 inch and maximum penetrations of 1/4 inch at the upstream ends of the piers.

(4) A minor scour depression with a radius of 4 feet and a depth of 6 inches was observed along the south side of Pier 1.

(5) Random light scaling and exposed aggregate was observed at all piers.

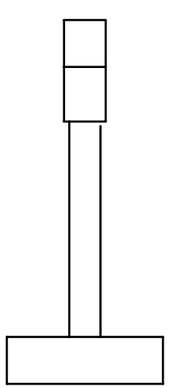

TYPICAL END VIEW OF PIERS

Legend

-6.0	Sounding Depth from Waterline (8/29/02)
-6.1	Sounding Depth from Waterline (8/23/97)
( )	Scour Depression

MINNESOTA
DEPARTMENT OF TRANSPORTATION
UNDERWATER BRIDGE INSPECTION

STRUCTURE NO. 38505
OVER SILVER RAPIDS
DISTRICT 1, LAKE COUNTY

INSPECTION AND SOUNDING PLAN

Drawn By: PRH	COLLINS ENGINEERS, INC. 300 W. WASHINGTON, STE. 600 CHICAGO, ILLINOIS 60606 (312) 704-9300	Date: AUG, 2002
Checked By: MDK		Scale: NTS
Code: 35120013		Figure No.: 1

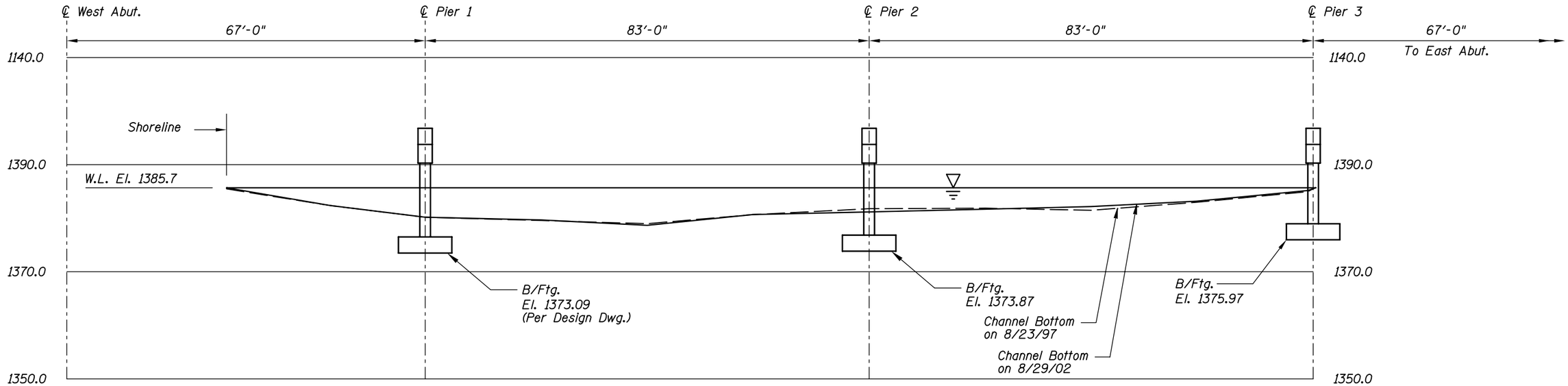

UPSTREAM FASCIA PROFILE

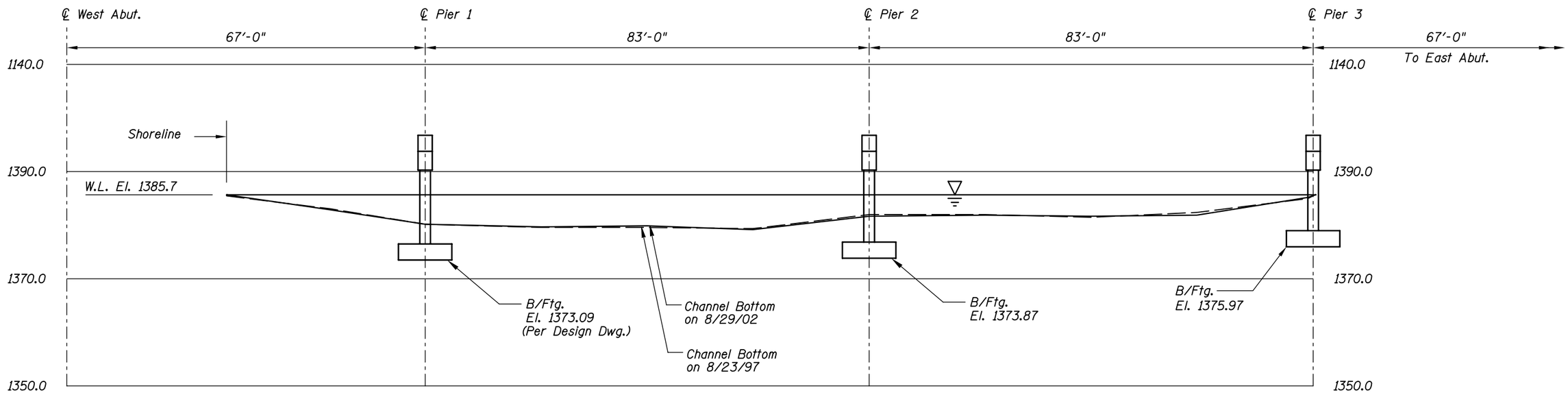

DOWNSTREAM FASCIA PROFILE

MINNESOTA
DEPARTMENT OF TRANSPORTATION
UNDERWATER BRIDGE INSPECTION

STRUCTURE NO. 38505
OVER SILVER RAPIDS
DISTRICT 1, LAKE COUNTY

UPSTREAM AND DOWNSTREAM
FASCIA PROFILES

Drawn By: PRH	**COLLINS ENGINEERS, INC.**	Date: AUG, 2002
Checked By: MDK	300 W. WASHINGTON, STE. 600 CHICAGO, ILLINOIS 60606 (312) 704-9300	Scale: 1"=20'
Code: 35120013		Figure No.: 2

Photograph 1. Overall View of the Structure, Looking South.

Photograph 2. View of Pier 1, Looking South.

Photograph 3. View of Pier 2, Looking South.

Photograph 4. View of Pier 3, Looking South.

Photograph 5. View of Typical Scaling at Pier 2, Looking South.

MINNESOTA DEPARTMENT OF TRANSPORTATION
OFFICE OF BRIDGES AND STRUCTURES
DAILY DIVING REPORT

INSPECTORS: Collins Engineers, Inc. DATE: August 29, 2002
ON-SITE TEAM LEADER: Daniel G. Stromberg, P.E.
BRIDGE NO: 38505 WEATHER: Cloudy, $^{\pm}70^{o}$ F
WATERWAY CROSSED: Silver Rapids
DIVING OPERATION: X SCUBA SURFACE SUPPLIED AIR
OTHER
PERSONNEL: Michelle D. Koerbel, Matthew J. Lengyel
EQUIPMENT: SCUBA, Scraper, Lead Line, Sounding Pole, Probe Rod, Camera
TIME IN WATER: 2:00 P.M.
TIME OUT OF WATER: 2:33 P.M.
WATERWAY DATA: VELOCITY $^{\pm}$0.5 fps
VISIBILITY $^{\pm}$3.0 feet
DEPTH 8.0 feet maximum at Pier 1
ELEMENTS INSPECTED: Piers 1, 2, and 3
REMARKS: Overall, the submerged concrete of the piers was in good condition with random light scaling and exposed aggregate, especially around the noses. A minor scour depression, 4 feet in radius and 6 inches deep, was observed on the channel side of Pier 1. The scour depression exposed the top of the footing but no vertical exposure was observed.

FURTHER ACTION NEEDED: _____ YES ____X____ NO

Reinspect the submerged substructure units at the normal maximum recommended (NBIS) interval of five (5) years.

MINNESOTA DEPARTMENT OF TRANSPORTATION
OFFICE OF BRIDGES AND STRUCTURES

UNDERWATER INSPECTION CONDITION RATING FORM

BRIDGE NO. 38505
INSPECTORS Collins Engineers, Inc.
ON-SITE TEAM LEADER Daniel G. Stromberg, P.E. 21491
WATERWAY CROSSED Silver Rapids

INSPECTION DATE August 29, 2002

NOTE: USE ALL APPLICABLE CONDITION DEFINITIONS AS DEFINED IN THE MINNESOTA RECORDING AND CODING GUIDE INCLUDING GENERAL, SUBSTRUCTURE, CHANNEL AND PROTECTION, AND CULVERTS AND WALL DEFINITIONS TO COMPLETE THIS FORM.

CONDITION RATING

			SUBSTRUCTURE						CHANNEL					GENERAL					
UNIT REFERENCE NO.		MAXIMUM DEPTH OF WATER	PILING	COLUMNS, SHAFTS, OR FACES*	FOOTINGS	DISPLACEMENT	OTHER (BRACING)	OVERALL SUBSTRUCTURE CONDITION CODE*	SCOUR	EMBANKMENT EROSION	EMBANKMENT PROTECTION	OTHER (DRIFT/DEBRIS)	OVERALL CHANNEL & PROTECTION CONDITION	CONCRETE	STEEL	TIMBER	LOSS OF SECTION	PREVIOUS REPAIR OR MAINTENANCE	OTHER
	UNIT DESCRIPTION	1	2	3	4	5	6	7	8	9	10	11	12	13	14	15	16	17	18
	Pier 1	8.0’	N	7	8	9	N	7	6	N	N	N	6	7	N	N	8	N	N
	Pier 2	5.0’	N	7	N	9	N	7	8	N	N	N	8	7	N	N	8	N	N
	Pier 3	0.8’	N	8	N	9	N	8	8	N	N	N	8	7	N	N	8	N	N

*UNDERWATER PORTION ONLY

REMARKS: Overall, the submerged concrete of the piers was in good condition with random light scaling and exposed aggregate, especially around the noses. A minor scour depression, 4 feet in radius and 6 inches deep, was observed on the channel side of Pier 1. The scour depression exposed the top of the footing but no vertical exposure was observed.

NOTES: ATTACH SKETCHES AS NEEDED, IDENTIFY REMARK BY REFERRING TO UNIT REFERENCE NO. AND REMARK NO.
USE GENERAL SECTION TO IDENTIFY OVERALL PRESENCE OF SPALLS, CRACKS, CORROSION, ETC.