UNDERWATER BRIDGE INSPECTION REPORT

STRUCTURE NO. 6665

CSAH NO. 4

OVER

ISLAND LAKE

ST. LOUIS COUNTY

SEPTEMBER 26, 2012

PREPARED FOR THE

MINNESOTA DEPARTMENT OF TRANSPORTATION

BY

COLLINS ENGINEERS, INC.

JOB NO. 7423

MINNESOTA DEPARTMENT OF TRANSPORTATION
UNDERWATER BRIDGE INSPECTION

REPORT SUMMARY:

The substructure units inspected at Bridge No. 6665, Piers 1 and 2, were found to be in good to satisfactory condition with no defects of structural significance. The deterioration on the substructure units has progressed slightly since the previous inspection, but still does not adversely affect the structural integrity of the structure. The channel bottom around both piers appeared to be stable with no significant scour or appreciable changes since the previous inspection.

INSPECTION FINDINGS:

(A) The newer concrete surfaces on the end sections of both piers exhibited light scaling with a maximum penetration of 1/4 inch in a 2-foot-high band at the waterline.

(B) The older concrete surfaces in the middle section of both piers exhibited moderate scaling and exposed aggregate with typical penetrations of 1/4 inch and maximum penetrations of 1/2 to 1 inch in a 5-foot-high band at the waterline.

(C) The steel pipe piles below the newer concrete sections exhibited nodular rust and surface corrosion covering 25 to 100 percent of the surface area below the waterline, with minor pitting related section loss typically 1/32 inch deep and up to 1/16 inch deep on the upper 10 feet of the piles.

(D) The rectangular steel sections below the middle section of both piers exhibited heavy concentrations of corrosion covering 75 to 100 percent of the lower half of the columns with up to 1.5-inch-diameter rust nodules and/or uniform coverage and pitting related section losses of up to 1/16 inch deep. Lesser concentrations of up to 1-inch-diameter nodules were encountered on the upper portion of the columns covering up to 50 percent of the surface area with pitting related section losses up to 1/8 inch deep.

(E) Vertical cracks were observed in the joint between the newer end concrete and the original middle section concrete of the piers, with maximum widths of 1/8 to 1/2 inch.

RECOMMENDATIONS:

(A) Monitor cracking between the original and new concrete of piers, and if found to be worsening, repairs with epoxy based materials may be required. The cracking appears stable (same as last inspection, no differential movement), but could be aggravated by freeze/thaw action, and should therefore be monitored during future inspections.

(B) Reinspect the submerged substructure units at the normal maximum recommended (NBIS) interval of sixty (60) months.

Respectfully submitted,

Inspection Team Leader:
Daniel G. Stromberg, P.E.

PROFESSIONAL ENGINEER
I hereby certify that this plan, specification, or report was prepared by me or under my direct supervision and that I am a duly Licensed Professional Engineer under the laws of the State of Minnesota.

Daniel G. Stromberg

Date 6/30/14 License # 21491

COLLINS ENGINEERS, INC.

Daniel G. Stromberg
Registered Professional
Engineer, State of Minnesota

MINNESOTA DEPARTMENT OF TRANSPORTATION
UNDERWATER BRIDGE INSPECTION

1. BRIDGE DATA

Bridge Number: 6665

Feature Crossed: Island Lake

Feature Carried: CSAH No. 4

Location: St. Louis County

Bridge Description: The structure consists of a three span, multiple steel beam superstructure supported by two reinforced concrete abutments and two reinforced concrete caps on pile and column piers, numbered 1 and 2 starting from the south. The original pier cap is supported by built-up steel plate columns. The structure was widened since the original construction, and the new concrete end sections of the pier caps are supported by steel pipe piles.

2. INSPECTION DATA

Professional Engineer Diver: Daniel G. Stromberg, P.E.

Dive Team: Marc B. Parker, Clayton G. Brookins

Date: September 26, 2012

Weather Conditions: Sunny, 50°F

Underwater Visibility: 3.0 feet

Waterway Velocity: Negligible / None

3. SUBSTRUCTURE INSPECTION DATA

Substructure Inspected: Piers 1 and 2.

General Shape: The piers consist of a concrete cap supported by two rectangular, concrete filled, built-up steel plate section columns (original/middle), and two 16 inch diameter concrete filled steel shell piles under each end (widening addition).

Maximum Water Depth at Substructure Inspected: Approximately 31.9 feet.

4. WATERLINE DATUM

Water Level Reference: The top of the pier cap on the east side of Pier 2.

Water Surface: The waterline was approximately 6.3 feet below reference.
Water Elevation = 1367.1.

5. NBIS CODING INFORMATION (Minnesota specific codes are used for 92B and 113)

Item 60: Substructure: Code __6__

Item 61: Channel and Channel Protection: Code __8__

Item 92B: Underwater Inspection: Code B/09/12

Item 113: Scour Critical Bridges: Code I/91

Bridge is scour critical because abutment or pier foundation is rated as unstable due to observed scour at bridge site.
_____Yes __X__No

6. STRUCTURAL ELEMENT CONDITION RATING

Item #	Element Description	Quantity	Unit	Conditions				
				1	2	3	4	5
210	Reinforced Concrete Pier Wall	120	LF	80	40			
361	Scour Smart Flag	1	EA	1				
382	Cast-In-Place (CIP) Piling	12	EA	8	4			
985	Slopes & Slope Protection	2	EA		2			

Photograph 1. Overall View of Structure, Looking Southwest.

Photograph 2. View of Pier 1, Looking Southwest.

Photograph 3. View of Pier 2, Looking Southeast.

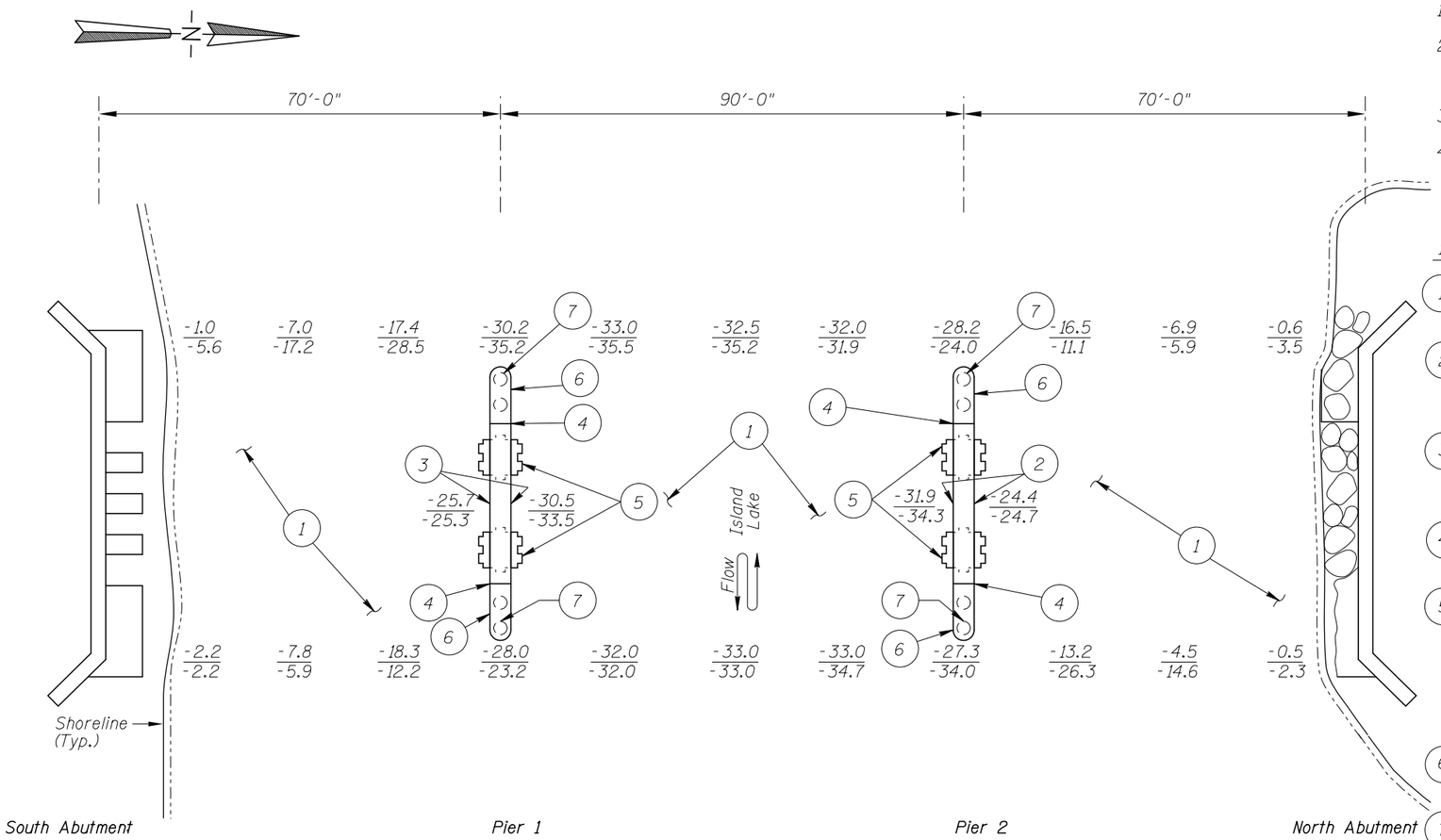

SOUNDING PLAN

GENERAL NOTES:

1. Piers 1 and 2 were inspected underwater.
2. At the time of inspection on September 26, 2012, the waterline was located approximately 6.3 feet below the top of cap at the east end of Pier 2. This corresponds to a waterline elevation of 1367.1 based on the previous report dated August 30, 2002.
3. Soundings indicate the water depth at the time of inspection and are measured in feet.
4. Soundings were taken parallel to the bridge at 1/4 point intervals between the substructure units.

INSPECTION NOTES:

1. The channel bottom consisted of sandy gravel with widespread 6 inch to 1 foot diameter riprap, overlayed with up to 1 inch of soft silt, allowing up to 4 inches of probe rod penetration.
2. Moderate scaling with typical penetrations of 1/4 inch and up to 1 inch maximum penetration with exposed aggregate on the older concrete surfaces in the middle of Pier 2, extending from approximately 3 feet above the waterline to 2 feet below the waterline.
3. Moderate scaling with typical penetrations of 1/4 inch and up to 1/2 inch maximum penetration with exposed aggregate on the older concrete surfaces in the middle of Pier 1, extending from approximately 3 feet above the waterline to 2 feet below the waterline.
4. Cracking between new and old concrete along entire interface, typically hairline to 1/8 inch wide with 1/2 inch maximum width (at south side of Pier 2).
5. Rust nodules and surface corrosion were observed on all of the steel columns along the entire length, with the heaviest concentration (up to 1.5 inch diameter and/or uniform coverage) exhibited on the lower half, with 75 to 100 percent of the surface area covered and section losses up to 1/16 inch deep. On the upper half, lesser concentrations of up to 1 inch diameter nodules, with up to 50 percent of the surface area covered and section losses up to 1/8 inch deep.
6. Light scaling with 1/4 inch of maximum penetration on the newer concrete surfaces at the ends of Piers 1 and 2 in a 2.0 foot band at the waterline.
7. Steel shell piles under pier widening additions exhibited surface corrosion ranging in coverage from 25 to 50 percent on upper 20 to 25 feet, and 80 to 100 percent with rust nodules on the bottommost 6 to 10 feet. Nodules typically have up to 1/32 inch deep pitting and a maximum of 1/16 inch deep pitting on the upper 10 feet of the piles.

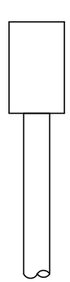

TYPICAL END VIEW OF PIERS

Note:

All soundings based on 2012 waterline location.

Legend

-2.0	Sounding Depth from Waterline (9/26/12)
-5.2	Sounding Depth from Waterline (8/24/07)
( )	16" CIP Concrete Pile (Concrete Filled Steel Shell)
	Concrete Filled Built-up Steel Sheet and Plate Column
	Concrete Rubble

MINNESOTA
DEPARTMENT OF TRANSPORTATION
UNDERWATER BRIDGE INSPECTION

STRUCTURE NO. 6665
OVER ISLAND LAKE
DISTRICT 1, ST. LOUIS COUNTY

INSPECTION AND SOUNDING PLAN

Drawn By: MBP	COLLINS ENGINEERS INC 123 North Wacker Drive Suite 900 Chicago, IL 60606 (312) 704-9300 www.collinsengr.com	Date: NOV 2012
Checked By: LJ		Scale: NTS
Code: 74236665		Figure No.: 1

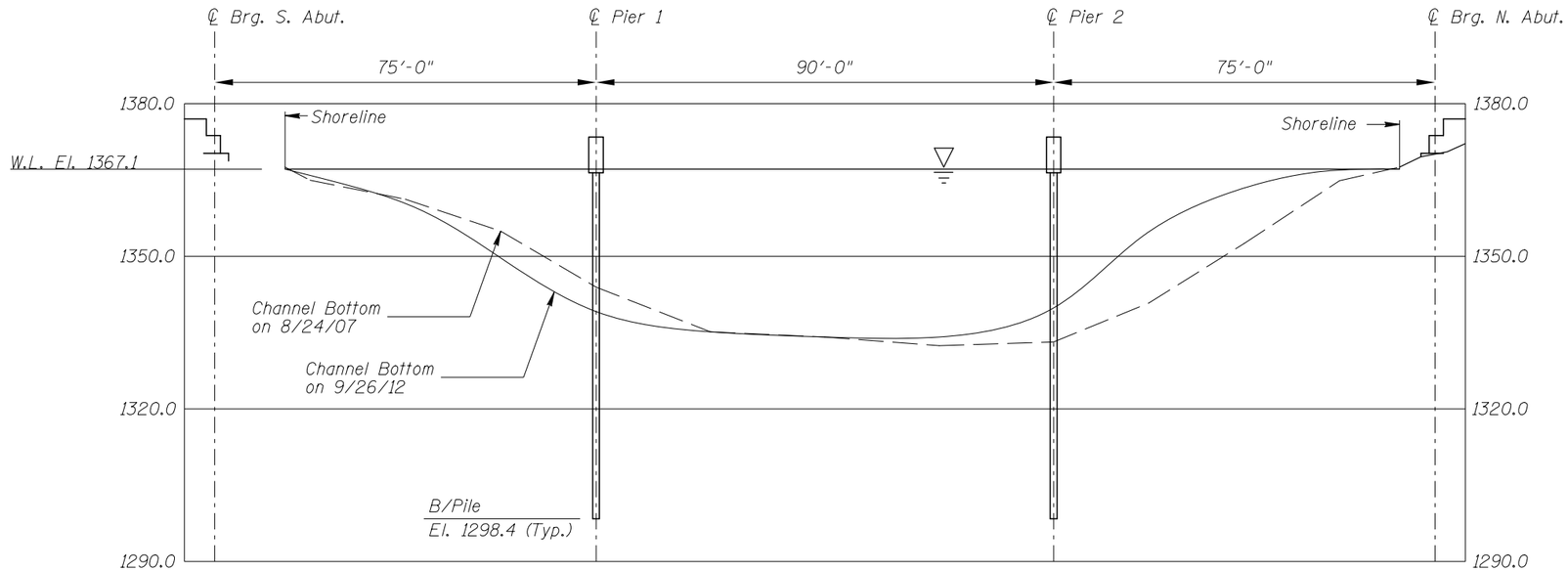

EAST FASCIA PROFILE

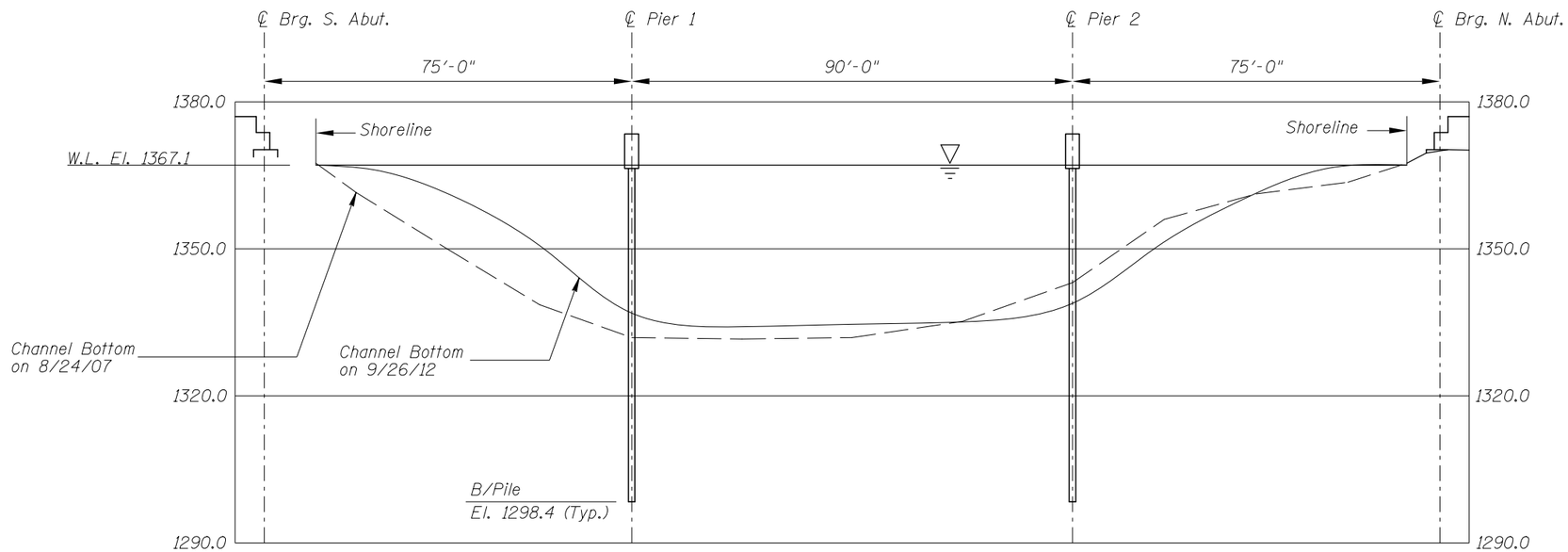

WEST FASCIA PROFILE

Note:

Refer to Figure 1 for General Notes.

MINNESOTA
DEPARTMENT OF TRANSPORTATION
UNDERWATER BRIDGE INSPECTION

STRUCTURE NO. 6665
OVER ISLAND LAKE
DISTRICT 1, ST. LOUIS COUNTY

EAST AND WEST
FASCIA PROFILES

Drawn By: MBP	COLLINS ENGINEERS INC 123 North Wacker Drive Suite 900 Chicago, IL 60606 (312) 701-9300 www.collinsengr.com	Date: NOV 2012
Checked By: LJ		Scale: 1"=30'
Code: 74236665		Figure No.: 2

MINNESOTA DEPARTMENT OF TRANSPORTATION

OFFICE OF BRIDGES AND STRUCTURES

DAILY DIVING REPORT

INSPECTORS: Collins Engineers, Inc. DATE: September 26, 2012

ON-SITE TEAM LEADER: Daniel G. Stromberg, P.E.

BRIDGE NO: 6665 WEATHER: Sunny, 55°F

WATERWAY CROSSED: Island Lake

DIVING OPERATION: X SCUBA _____ SURFACE SUPPLIED AIR

OTHER _____

PERSONNEL: Marc B. Parker, Clayton G. Brookins

EQUIPMENT: SCUBA, U/W Light, Scraper, Lead Line, Fathometer, Sounding Pole, Probe Rod, Camera

TIME IN WATER: 9:15 A.M.

TIME OUT OF WATER: 9:50 A.M.

WATERWAY DATA: VELOCITY Negligible/None

VISIBILITY 3.0 feet

DEPTH 31.9 feet maximum at Pier 2

ELEMENTS INSPECTED: Piers 1 and 2

REMARKS: Overall, the submerged concrete and steel was generally in good condition with no structurally significant defects. The older (mid-portion) concrete exhibited moderate scaling with 1/2 inch maximum penetration and exposed aggregate. The steel of the newer pipe piles and original built-up columns exhibited widespread nodular corrosion, with 1/16 to 1/8 inch deep pitting on the original columns and 1/32 to 1/16 inch deep pitting on the newer piles. The interface between the new (widening) concrete and the original construction concrete typically exhibited 1/8 to 1/2 inch wide cracking (comparable to last inspection).

FURTHER ACTION NEEDED: _____ YES ____X____ NO

Monitor cracking between the original and new concrete of piers, and if found to be worsening, repairs with epoxy based materials may be required. The cracking appears stable (same as last inspection, no differential movement), but could be aggravated by freeze/thaw action, and should therefore be monitored during future inspections.

Reinspect the submerged substructure units at the normal maximum recommended (NBIS) interval of sixty (60) months.

MINNESOTA DEPARTMENT OF TRANSPORTATION
OFFICE OF BRIDGES AND STRUCTURES

UNDERWATER INSPECTION CONDITION RATING FORM

BRIDGE NO. 6665
INSPECTORS Collins Engineers, Inc.
ON-SITE TEAM LEADER Daniel G. Stromberg, P.E., S.E.
WATERWAY CROSSED Island Lake

INSPECTION DATE September 26, 2012

NOTE: USE ALL APPLICABLE CONDITION DEFINITIONS AS DEFINED IN THE MINNESOTA RECORDING AND CODING GUIDE INCLUDING GENERAL, SUBSTRUCTURE, CHANNEL AND PROTECTION, AND CULVERTS AND WALL DEFINITIONS TO COMPLETE THIS FORM.

CONDITION RATING

			SUBSTRUCTURE						CHANNEL					GENERAL					
UNIT REFERENCE NO.	UNIT DESCRIPTION	MAXIMUM DEPTH OF WATER	PILING	COLUMNS, SHAFTS, OR FACES*	FOOTINGS	DISPLACEMENT	OTHER	OVERALL SUBSTRUCTURE CONDITION CODE*	SCOUR	EMBANKMENT EROSION	EMBANKMENT PROTECTION	OTHER (DRIFT/DEBRIS)	OVERALL CHANNEL & PROTECTION CONDITION	CONCRETE	STEEL	TIMBER	LOSS OF SECTION	PREVIOUS REPAIR OR MAINTENANCE	OTHER
		1	2	3	4	5	6	7	8	9	10	11	12	13	14	15	16	17	18
	Pier 1	30.5’	6	7	N	8	N	6	8	N	8	8	N	7	6	N	N	N	N
	Pier 2	31.9’	6	7	N	8	N	6	8	N	8	8	N	7	6	N	N	N	N

*UNDERWATER PORTION ONLY

REMARKS: Overall, the submerged concrete and steel was generally in good condition with no structurally significant defects. The older (mid-portion) concrete exhibited moderate scaling with 1/2 inch maximum penetration and exposed aggregate. The steel of the newer pipe piles and original built-up columns exhibited widespread nodular corrosion, with 1/16 to 1/8 inch deep pitting on the original columns and 1/32 to 1/16 inch deep pitting on the newer piles. The interface between the new (widening) concrete and the original construction concrete typically exhibited 1/8 to 1/4 inch wide cracking (comparable to last inspection).

NOTES: ATTACH SKETCHES AS NEEDED, IDENTIFY REMARK BY REFERRING TO UNIT REFERENCE NO. AND REMARK NO.
USE GENERAL SECTION TO IDENTIFY OVERALL PRESENCE OF SPALLS, CRACKS, CORROSION, ETC.