UNDERWATER BRIDGE INSPECTION REPORT

STRUCTURE NO. 7775

CSAH 116

OVER THE

MOOSE RIVER

ST. LOUIS COUNTY

JUNE 22, 2012

PREPARED FOR THE

MINNESOTA DEPARTMENT OF TRANSPORTATION

BY

COLLINS ENGINEERS, INC.

JOB NO. 7423

MINNESOTA DEPARTMENT OF TRANSPORTATION
UNDERWATER BRIDGE INSPECTION

REPORT SUMMARY:

The substructure units inspected at Bridge 7775, the East and West Abutments and Bent 1, were in good to satisfactory condition with no significant deterioration. The timber piles, cross-bracing, and abutment backwall planking were all typically firm and sound with no appreciable decay or loss of section. Majority of the piles had timber shims placed at the top to restore full bearing of the pile caps. Along the downstream half of the East Abutment the pile cap was horizontally split and rotated towards the Abutment backwall such that full bearing on the downstream three piles has been compromised.

INSPECTION FINDINGS:

(A) All timber piles, pile caps, bracing, and backwall planks are generally sound and in good condition. The timber was typically firm allowing awl penetrations of 1/8 inch with no detectable soft areas or indications of decay. Majority of piles had 1 inch thick or tapered shims to restore bearing of the pile cap.

(B) The pile cap at the East Abutment exhibited deformation and has rotated towards the backwall, particularly from Piles D to F.

(C) A horizontal split 1/2 inch wide was observed on bottom face of the East Abutment pile cap extending from Piles D to F. The split has compromised the bearing on the pile, shifting majority of bearing toward the backwall (east) side of the piles.

RECOMMENDATIONS:

(A) Monitor timber pile cap bearing condition and structural stability at the East Abutment during future above water and routine underwater inspections.

(B) Reinspect the submerged substructure units at the normal maximum recommended (NBIS) interval of five sixty (60) months.

Inspection Team Leader:
Daniel G. Stromberg, P.E.

Respectfully submitted,

PROFESSIONAL ENGINEER
I hereby certify that this plan, specification, or report was prepared by me or under my direct supervision and that I am a duly Licensed Professional Engineer under the laws of the State of Minnesota.

Daniel G. Stromberg

Date 6/30/14 License # 21491

COLLINS ENGINEERS, INC.

Daniel G. Stromberg
Registered Professional
Engineer, State of Minnesota

MINNESOTA DEPARTMENT OF TRANSPORTATION
UNDERWATER BRIDGE INSPECTION

1. BRIDGE DATA

Bridge Number: 7775

Feature Crossed: Moose River

Feature Carried: CSAH 116

Location: St. Louis County

Bridge Description: The superstructure consists of timber decking supported by timber beams. The superstructure is supported by two abutments and a pile bent. Both abutments and the pile bent consist of six 12 inch diameter timber piles supporting a 12 inch by 12 inch timber pile cap. The substructure units are designated as the West Abutment, Bent 1, and the East Abutment. Piles are designated A through F from south to north.

2. INSPECTION DATA

Professional Engineer/ Team Leader: Daniel G. Stromberg, P.E.

Dive Team: Clayton Brookins, Breanne Stromberg

Date: June 22, 2012

Weather Conditions: Sunny, 75 ºF

Underwater Visibility: 2 ft.

Waterway Velocity: 0.5 ft/sec

3. SUBSTRUCTURE INSPECTION DATA

Substructure Inspected: The West Abutment, Bent 1, and the East Abutment

General Shape: The West and East Abutments and Bent 1 consisted of a 12 inch by 12 inch diameter timber pile cap supported by six 12 inch diameter timber piles. Bent 1 has four diagonal 3 inch by 8 inch timber cross-braces. The wingwalls were comprised of timber piles and timber lagging.

Maximum Water Depth at Substructure Inspected: Approximately 6.6 feet.

4. WATERLINE DATUM

Water Level Reference: The top of the pile cap at the upstream end of Bent 1.

Water Surface: The waterline was approximately 3.5 feet below reference.
Assumed Waterline Elevation: 96.5

5. NBIS CODING INFORMATION (Minnesota specific codes are used for 92B and 113)

Item 60: Substructure: Code __6__

Item 61: Channel and Channel Protection: Code __7__

Item 92B: Underwater Inspection: Code _B/06/12

Item 113: Scour Critical Bridges: Code __N__

Bridge is scour critical because abutment or pier foundation is rated as unstable due to observed scour at bridge site.
_____ Yes __X__ No

6. STRUCTURAL ELEMENT CONDITION RATING

Item #	Element Description	Quantity	Unit	Conditions				
				1	2	3	4	5
228	Timber Piling	18	EA		18			
216	Timber Abutment	52	LF	52				
235	Timber Pile Cap	78	LF	66		12		

Photograph 1. View of the Upstream Fascia, Looking Northwest.

Photograph 2. View of the Downstream Fascia, Looking South.

Photograph 3. View of the East Abutment, Looking North.

Photograph 4. View of Bent 1, Looking Northwest.

Photograph 5. View of the West Abutment, Looking Northwest.

Photograph 6. View of the Rotated Pile Cap at the East Abutment, Looking North.

Photograph 7. View of the Rotated Pile Cap at the East Abutment, Looking Southeast.

Photograph 8. View of Typical Plywood Shimming at Pile A of the West Abutment, Looking Southwest.

Photograph 9. View of the Typical Wingwall Condition at the Downstream Side of the West Abutment, Looking Southeast.

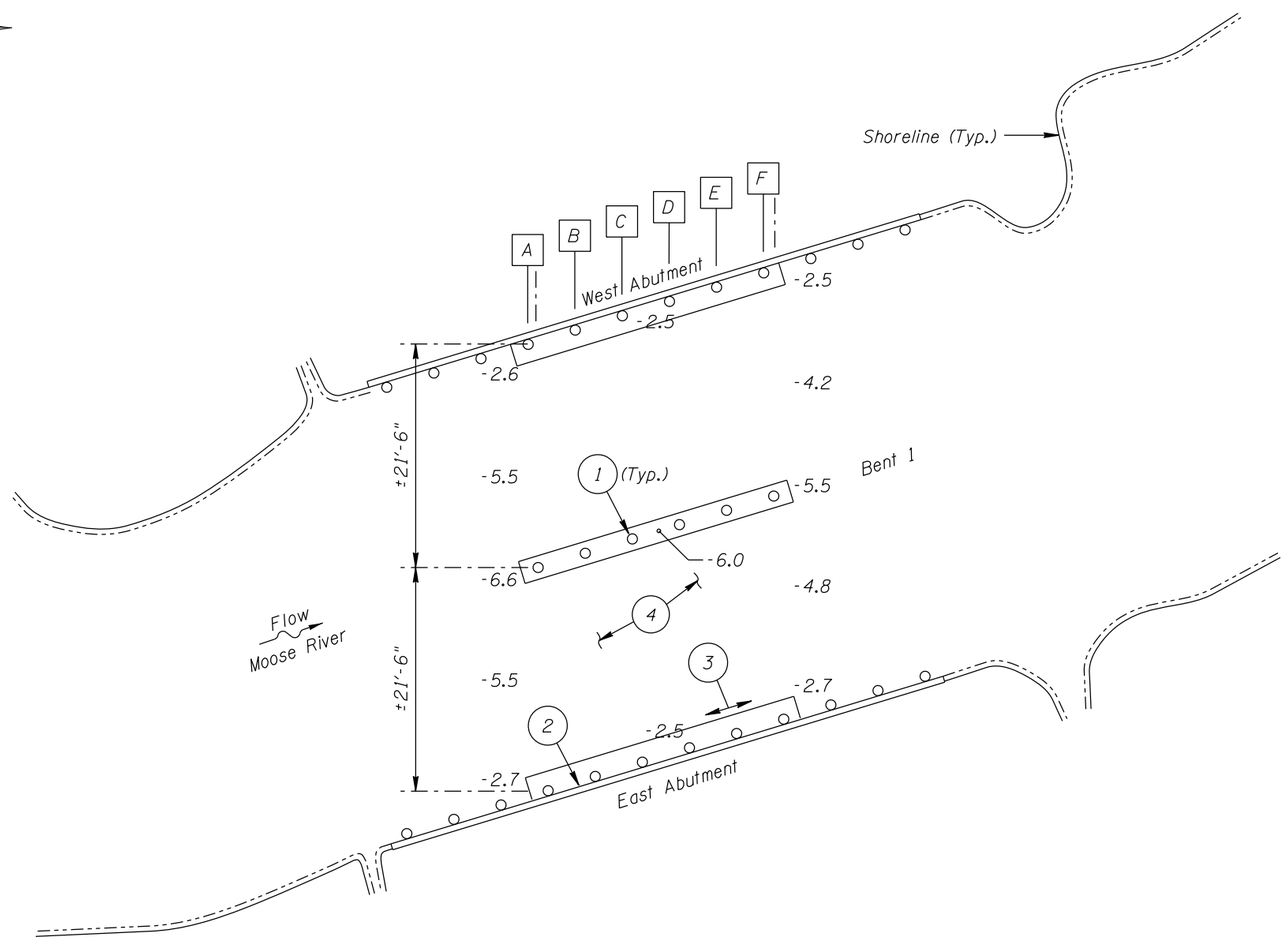

INSPECTION NOTES:

1. All timber piles, pile caps, bracing, and backwall planks are generally sound and in good condition. The timber was typically firm allowing awl penetrations of 1/8 inch with no detectable soft areas or indications of decay. Majority of piles had 1 inch thick or tapered shims to restore bearing of the pile cap.

2. The pile cap at the East Abutment exhibited deformation and has rotated towards the backwall, particularly from Piles D to F.

3. A horizontal split 1/2 inch wide was observed on bottom face of the East Abutment pile cap extending from Piles D to F. The split has compromised the bearing on the pile, shifting majority of bearing toward the backwall (east) side of the piles.

4. The channel bottom material typically consisted of firm sand allowing 1 to 2 inches of probe rod penetration.

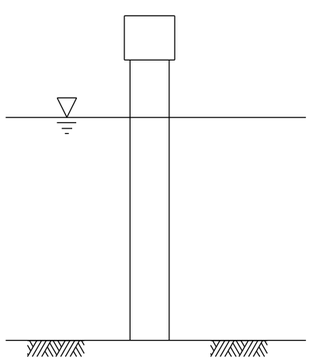

TYPICAL END VIEW OF PIERS

GENERAL NOTES:

1. The East and West Abutments and Pier 1 were inspected underwater.
2. At the time of inspection, on June 22, 2012, the waterline was located approximately 3.5 feet below the top of cap on Pier 1. Since insufficient elevation information was available, an elevation of 100.0 was assumed. This corresponds to a waterline elevation of 96.5.
3. Soundings indicate the water depth at the time of inspection and are measured in feet.
4. Soundings were taken parallel to the bridge at midpoints between the substructure units.

Legend

-35.0 Sounding Depth (6/22/12)

MINNESOTA
DEPARTMENT OF TRANSPORTATION
UNDERWATER BRIDGE INSPECTION

STRUCTURE NO. 7775
CSAH 116 OVER THE MOOSE RIVER
ST. LOUIS COUNTY

INSPECTION AND SOUNDING PLAN

Drawn By: BLV	COLLINS ENGINEERS INC 123 North Wacker Drive Suite 900 Chicago, IL 60606 (312) 704-9300 www.collinsengr.com	Date: JUNE 2012
Checked By: LJ		Scale: 1"=15'
Code: 74237775		Figure No.: 1

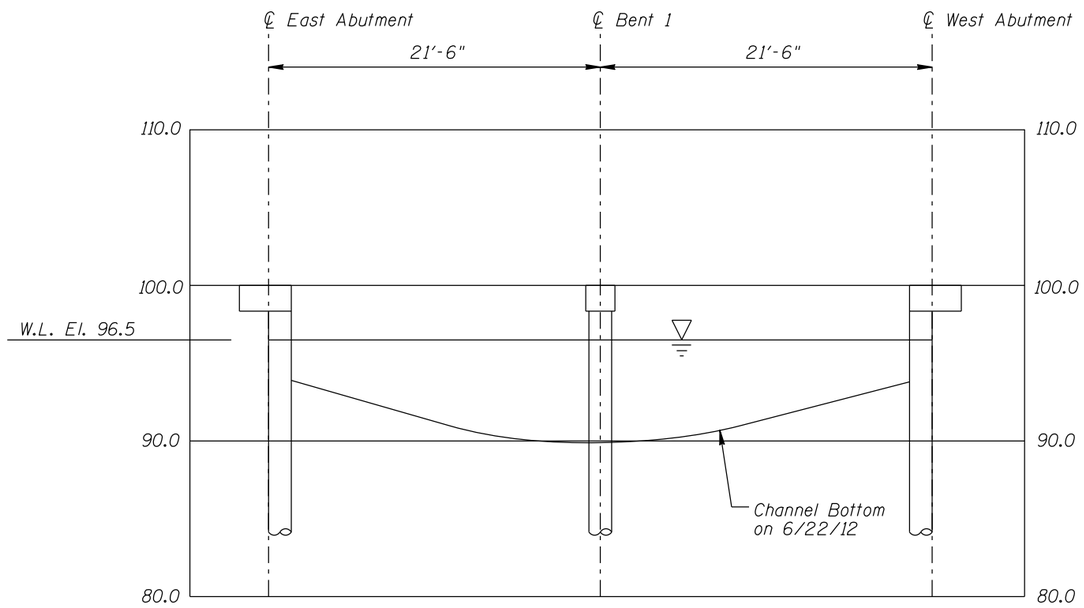

UPSTREAM FASCIA PROFILE

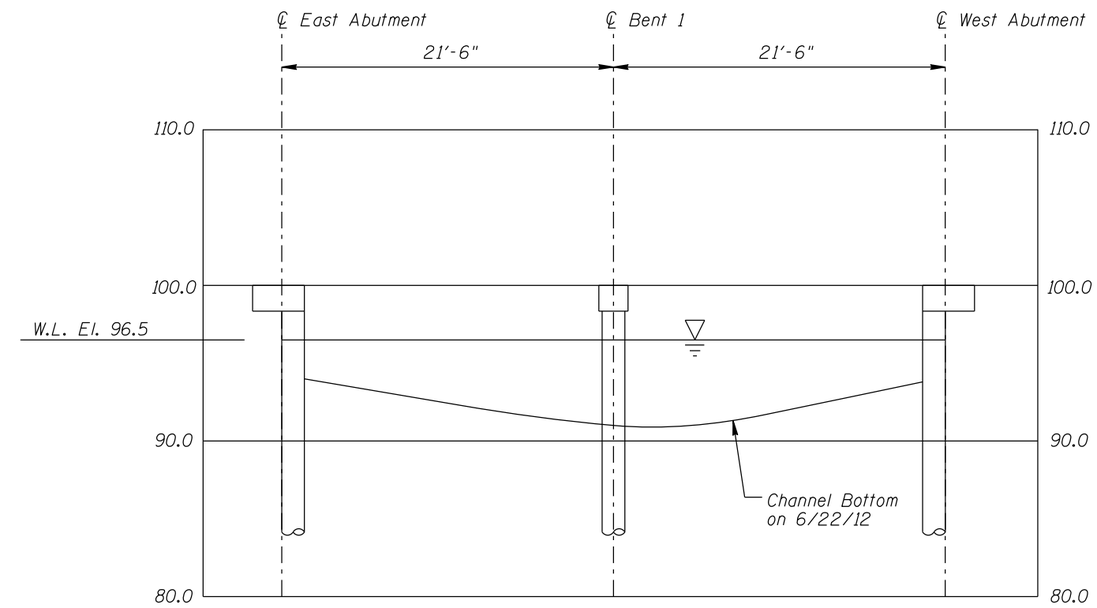

DOWNSTREAM FASCIA PROFILE

Note:

Refer to Figure 1 for General Notes.

MINNESOTA
DEPARTMENT OF TRANSPORTATION
UNDERWATER BRIDGE INSPECTION

STRUCTURE NO. 7775
CSAH 116 OVER MOOSE RIVER
ST. LOUIS COUNTY

UPSTREAM AND DOWNSTREAM
FASCIA PROFILES

Drawn By: BLV	COLLINS ENGINEERS INC. 123 North Wacker Drive Suite 900 Chicago, IL 60606 (312) 704-9300 www.collinsengr.com	Date: JUNE 2012
Checked By: LJ		Scale: 1"=10'
Code: 74237775		Figure No.: 2

MINNESOTA DEPARTMENT OF TRANSPORTATION
OFFICE OF BRIDGES AND STRUCTURES

DAILY DIVING REPORT

INSPECTORS: Collins Engineers, Inc. DATE: June 22, 2012

ON-SITE TEAM LEADER: Daniel G. Stromberg, P.E.

BRIDGE NO: 7775 WEATHER: Sunny, 75°F

WATERWAY CROSSED: Moose River

DIVING OPERATION: X SCUBA _____ SURFACE SUPPLIED AIR

_____ OTHER_____

PERSONNEL: Clayton Brookins, Breanne Stromberg

EQUIPMENT: Commercial Scuba, U/W Light, Hand Tools, Sounding Pole, Lead Line, Probe Rod, Camera

TIME IN WATER: 9:30 A.M.

TIME OUT OF WATER: 10:30 A.M.

WATERWAY DATA: VELOCITY 0.5 ft/sec

VISIBILITY 2 ft

DEPTH 6.6 feet maximum at Bent 1

ELEMENTS INSPECTED: The West and East Abutment and Bent 1

REMARKS: Overall, the East and West Abutments and Bent 1, were in good to satisfactory condition with no significant deterioration. The timber piles, cross-bracing, and abutment backwall planking were all typically firm and sound with no appreciable decay or loss of section. Majority of the piles had timber shims placed at the top to restore full bearing of the pile caps. Along the downstream half of the East Abutment the pile cap was horizontally split and rotated towards the Abutment backwall such that full bearing on the downstream three piles has been compromised.

FURTHER ACTION NEEDED: _____ YES X NO

Monitor timber pile cap condition at the East Abutment during future above water and routine underwater inspections.

Reinspect the submerged substructure units at the normal maximum recommended (NBIS) interval of five sixty (60) months.

MINNESOTA DEPARTMENT OF TRANSPORTATION
OFFICE OF BRIDGES AND STRUCTURES

UNDERWATER INSPECTION CONDITION RATING FORM

BRIDGE NO. 7775
INSPECTORS Collins Engineers, Inc.
ON-SITE TEAM LEADER Daniel G. Stromberg. P.E.
WATERWAY CROSSED Moose River

INSPECTION DATE June 22, 2012

NOTE: USE ALL APPLICABLE CONDITION DEFINITIONS AS DEFINED IN THE MINNESOTA RECORDING AND CODING GUIDE INCLUDING GENERAL, SUBSTRUCTURE, CHANNEL AND PROTECTION, AND CULVERTS AND WALL DEFINITIONS TO COMPLETE THIS FORM.

CONDITION RATING

			SUBSTRUCTURE						CHANNEL					GENERAL					
UNIT REFERENCE NO.	UNIT DESCRIPTION	MAXIMUM DEPTH OF WATER	PILING	COLUMNS, SHAFTS, OR FACES*	FOOTINGS	DISPLACEMENT (PILE BEARING)	OTHER (CROSS-BRACING)	OVERALL SUBSTRUCTURE CONDITION CODE*	SCOUR	EMBANKMENT EROSION	EMBANKMENT PROTECTION	OTHER (DRIFT/DEBRIS)	OVERALL CHANNEL & PROTECTION CONDITION	CONCRETE	STEEL	TIMBER	LOSS OF SECTION	PREVIOUS REPAIR OR MAINTENANCE	OTHER
		1	2	3	4	5	6	7	8	9	10	11	12	13	14	15	16	17	18
	East Abutment	2.7’	7	N	N	5	N	6	N	7	N	N	7	N	N	7	8	6	N
	Bent 1	6.6’	7	N	N	6	7	6	N	N	N	N	7	N	N	7	8	6	N
	West Abutment	2.6’	7	N	N	6	N	6	N	7	N	N	7	N	N	7	8	6	N

*UNDERWATER PORTION ONLY

REMARKS: Overall, the East and West Abutments and Bent 1, were in good to satisfactory condition with no significant deterioration. The timber piles, cross-bracing, and abutment backwall planking were all typically firm and sound with no appreciable decay or loss of section. Majority of the piles had timber shims placed at the top to restore full bearing of the pile caps. Along the downstream half of the East Abutment the pile cap was horizontally split and rotated towards the Abutment backwall such that full bearing on the downstream three piles has been compromised.

NOTES: ATTACH SKETCHES AS NEEDED, IDENTIFY REMARK BY REFERRING TO UNIT REFERENCE NO. AND REMARK NO.
USE GENERAL SECTION TO IDENTIFY OVERALL PRESENCE OF SPALLS, CRACKS, CORROSION, ETC.