UNDERWATER BRIDGE INSPECTION REPORT

STRUCTURE NO. 7780

CSAH 133

OVER A

DITCH

ST. LOUIS COUNTY

SEPTEMBER 27, 2012

PREPARED FOR THE

MINNESOTA DEPARTMENT OF TRANSPORTATION

BY

COLLINS ENGINEERS, INC.

JOB NO. 7423

MINNESOTA DEPARTMENT OF TRANSPORTATION
UNDERWATER BRIDGE INSPECTION

REPORT SUMMARY:

The substructure units inspected below water at Structure No. 7780, Box 1 and Box 2 of the culvert, were found to be in satisfactory to fair condition with some defects of only minor structural significance. The concrete of the walls, haunches and ceiling exhibited light to heavy scaling with a maximum penetration of 3/4 inch. A heavy accumulation of timber debris was observed obstructing the upstream opening of Box 1. The culvert had a layer of silty sand throughout the length of both boxes.

INSPECTION FINDINGS:

(A) The culvert floor was typically covered in a layer of silty sand allowing a maximum probe rod penetration of 4 inches.

(B) The channel bottom material upstream and downstream of the culvert apron consisted of silty sand allowing a maximum probe rod penetration of 8 inches.

(C) The concrete of the culvert walls and haunches exhibited moderate to heavy scaling with a typical penetration of 1/2 inch and a maximum penetration of 3/4 inch.

(D) The concrete of the culvert ceiling exhibited light scaling with a maximum penetration of 1/4 inch and random areas of poor concrete consolidation with a maximum penetration of 1 inch.

(E) A heavy timber debris accumulation of 4 inch diameter and smaller branches was observed obstructing the flow at Box 1.

(F) The concrete of the center wall extension at the upstream and downstream ends of the culvert exhibited heavy scaling with a maximum penetration of 2 inches.

(G) A 12 foot wide by 8 inch high area of concrete section loss was observed at the upstream headwall with up to 1.5 inches of penetration and exposed reinforcing steel exhibiting approximately 30 percent loss of section.

(H) A light timber debris accumulation was observed at the upstream opening of Box 2 extending 5 feet off the east face of the center wall.

RECOMMENDATIONS:

(A) The timber debris accumulation in Box 1 did not significantly affect the channel flow since the flow was very low, but ideally the debris should be removed before it becomes more detrimental. If the debris accumulation increases in size or density or the flow through the culvert increases, it may become more imperative to remove the debris to reduce excessive lateral loads on the culvert, limit further debris accumulation, and reduce the likelihood of channel bottom degradation resulting from obstructed flow.

RECOMMENDATIONS (CONT.):

(B) Reinspect the submerged substructure units at the normal maximum recommended (NBIS) interval of sixty (60) months.

(C) At the time of inspection of the submerged substructure units of Structure No. 7780, the waterline and water flow were noticeably lower than the mean values. As a result the inspection could be safely carried out by means of wading. During future inspections of the substructure units, a higher waterline elevation and/or increased flow may result in lower overhead clearance with a possibility of a confined space entrance requirements which may require a qualified dive team to safely carry out the inspection. If future inspections determine that the waterline consistently remains at a level which an inspection can be safely performed by the means of wading, consideration may be given to removing the structure from the underwater inspection list.

Respectfully submitted,

Inspection Team Leader:
Daniel G. Stromberg, P.E.

PROFESSIONAL ENGINEER
I hereby certify that this plan, specification, or report was prepared by me or under my direct supervision and that I am a duly Licensed Professional Engineer under the laws of the State of Minnesota.

Daniel G. Stromberg

Date 6/30/14 License # 21491

COLLINS ENGINEERS, INC.

Daniel G. Stromberg
Registered Professional
Engineer, State of Minnesota

MINNESOTA DEPARTMENT OF TRANSPORTATION
UNDERWATER BRIDGE INSPECTION

1. BRIDGE DATA

Bridge Number: 7780

Feature Crossed: A Ditch

Feature Carried: CSAH 133

Location: St. Louis County

Bridge Description: The culvert consists of two reinforced concrete culvert boxes designated as Box 1 and Box 2 from west to east.

2. INSPECTION DATA

Professional Engineer Diver: Daniel G. Stromberg, P.E.

Dive Team: Marc B. Parker, Clayton Brookins

Date: September 27, 2012

Weather Conditions: Sunny, 60°F

Underwater Visibility: 2.0 feet

Waterway Velocity: None/Negligible

3. SUBSTRUCTURE INSPECTION DATA

Substructure Inspected: Box 1 and Box 2

General Shape: The culvert consists of two reinforced concrete box barrels measuring 12 feet wide by 6 feet high and 42 feet long.

Maximum Water Depth at Substructure Inspected: Approximately 0.6 feet.

4. WATERLINE DATUM

Water Level Reference: The top of the culvert headwall at the upstream end of Box 1.

Water Surface: The waterline was approximately 6.9 feet below reference.
Assumed Waterline Elevation = 93.1 feet.

5. NBIS CODING INFORMATION (Minnesota specific codes are used for 92B and 113)

Item 62: Culvert Condition: Code __5_____

Item 61: Channel and Channel Protection: Code ___4___

Item 92B: Underwater Inspection: Code _A/09/12

Item 113: Scour Critical Bridges: Code__E/12_

Bridge is scour critical because abutment or pier foundation is rated as unstable due to observed scour at bridge site.

_____ Yes __X__ No

6. STRUCTURAL ELEMENT CONDITOIN RATING

Item #	Element Description	Quantity	Unit	Conditions				
				1	2	3	4	5
241	Concrete Culvert	84	LF	0	71	13	0	n/a
387	Concrete Wingwalls	4	EA	0	4	0	0	n/a
388	Culvert Headwall	2	EA	0	1	1	0	n/a
985	Slopes and Slope Protection	1	EA	1	0	0	n/a	n/a

Photograph 1. Overall View of the Culvert, Looking North.

Photograph 2. View of the Typical Concrete Condition of the Culvert Walls, Looking Northwest.

Photograph 3. View of Timber Debris Obstructing Box 1, Looking North.

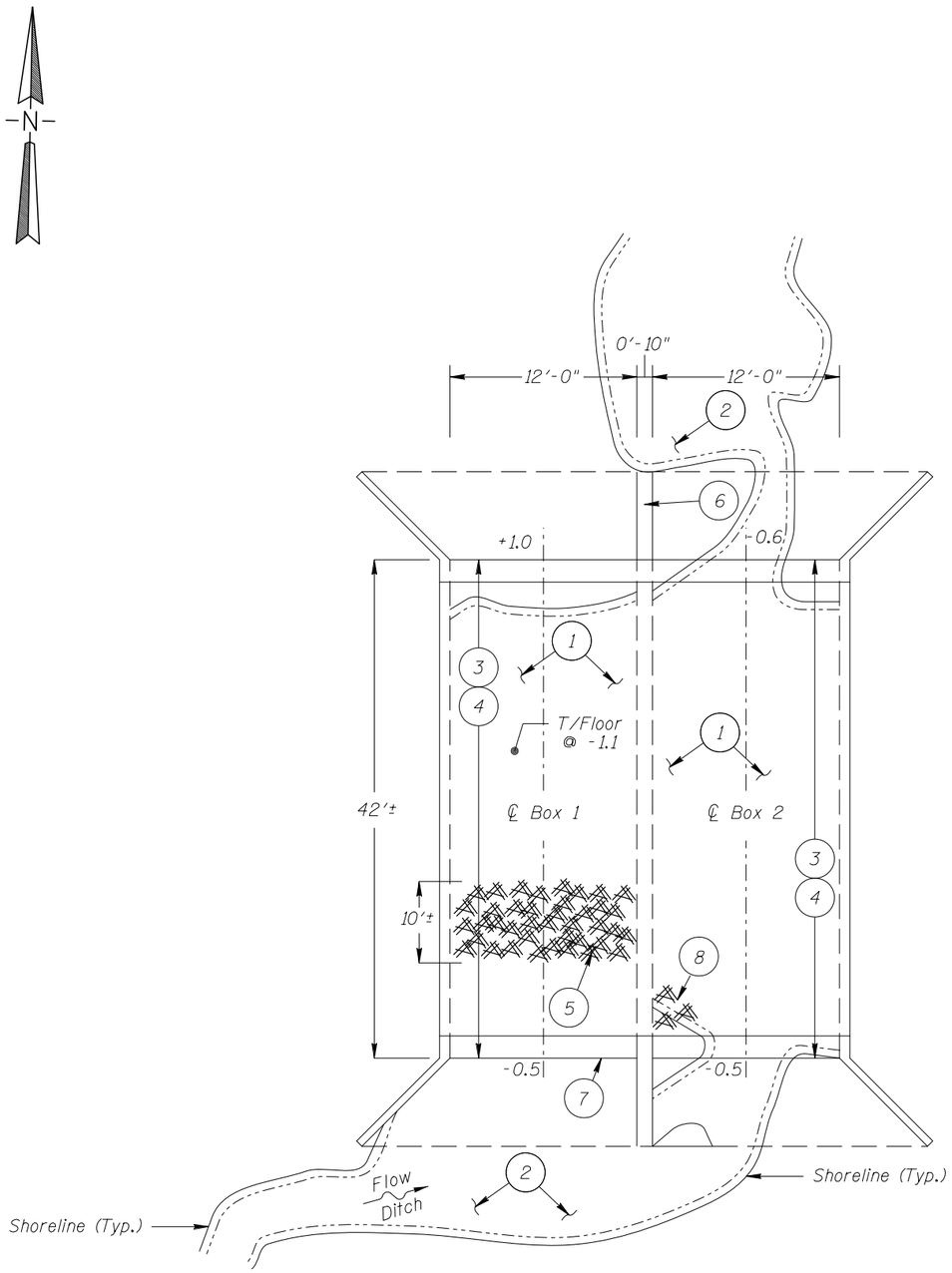

SOUNDING PLAN

INSPECTION NOTES:

1. The culvert floor was typically covered in a layer of silty sand with a maximum probe rod penetration of 4 inches.
2. The channel bottom material upstream and downstream of the culvert apron consisted of silty sand allowing a maximum probe rod penetration of 8 inches.
3. The concrete of the culvert walls and haunches exhibited moderate to heavy scaling with a typical penetration of $\frac{1}{2}$ inch allowing a maximum penetration of $\frac{3}{4}$ inch.
4. The concrete of the culvert ceiling exhibited light scaling with a maximum penetration of $\frac{1}{4}$ inch and random areas of poor concrete consolidation with a maximum penetration of 1 inch.
5. A heavy timber debris accumulation of 4 inch diameter and smaller branches was observed obstructing the flow at Box 1.
6. The concrete of the center wall extension at the upstream and downstream ends of the culvert exhibited heavy scaling with a maximum penetration of 2 inches.
7. A 12 foot wide by 8 inch high area of concrete section loss was observed at the upstream headwall with up to 1.5 inches of penetration and exposed reinforcing steel exhibiting approximately 30 percent loss of section.
8. A light timber debris accumulation was observed at the upstream opening of Box 2 extending 5 feet off the east face of the center wall.

GENERAL NOTES:

1. Box 1 and Box 2 of culvert were inspected underwater.
2. At the time of inspection, on September 27, 2012, the waterline was located approximately 6.9 feet below the top of the culvert headwall at the upstream end of Box 1. Since insufficient elevation information was available, an elevation of 100.0 was assumed. This corresponds to a waterline elevation of 93.1.
3. Soundings indicate the water depth at the time of inspection and are measured in feet.

Legend

-0.4	Sounding Depth (9/27/2012)
5	Inspection Note Number

MINNESOTA
DEPARTMENT OF TRANSPORTATION
UNDERWATER BRIDGE INSPECTION

STRUCTURE NO. 7780
CSAH 133 OVER A DITCH
ST. LOUIS COUNTY

INSPECTION AND SOUNDING PLAN

Drawn By: MBP	COLLINS ENGINEERS INC 123 North Wacker Drive Suite 900 Chicago, IL 60606 (312) 704-9300 www.collinsengr.com	Date: NOV. 2012
Checked By: LJ		Scale: 1"=10'
Code: 74237780		Figure No.: 1

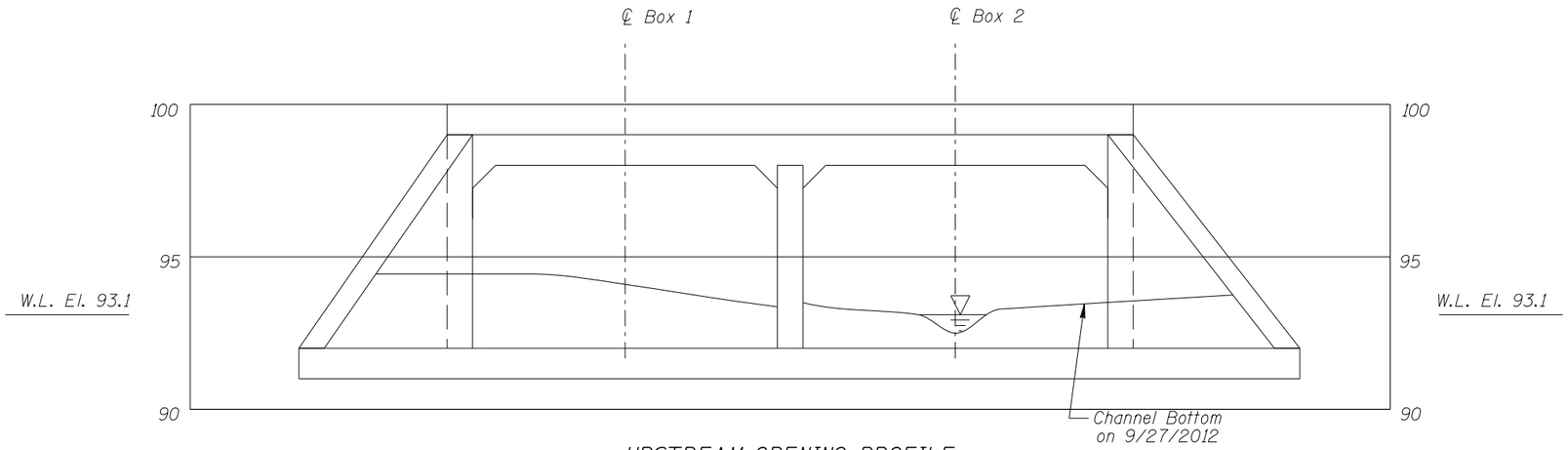

UPSTREAM OPENING PROFILE

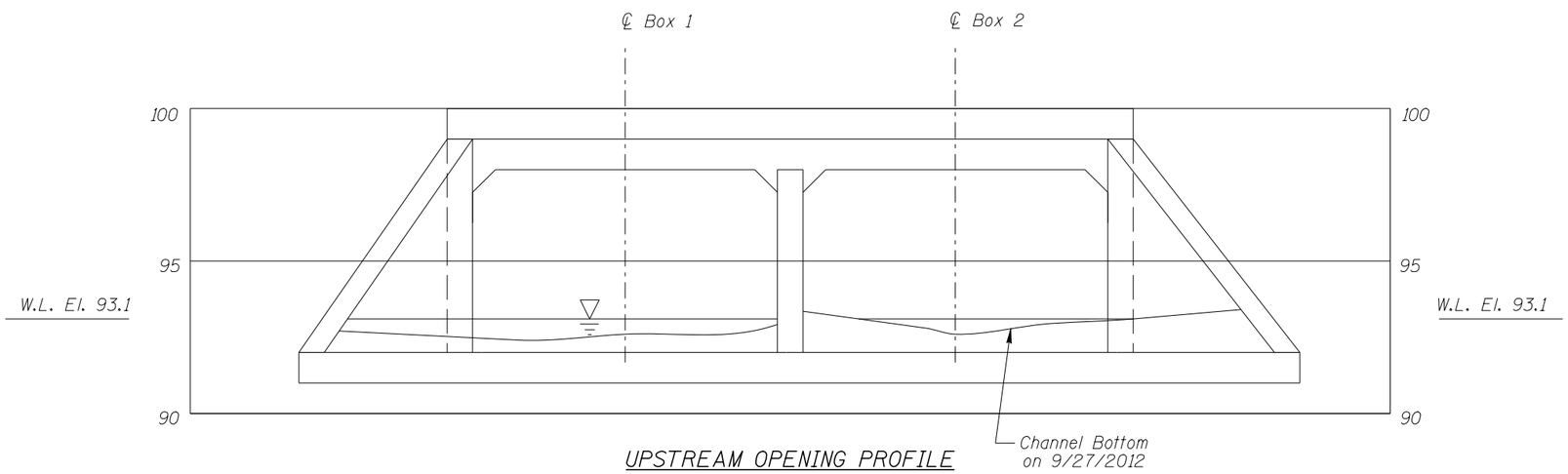

UPSTREAM OPENING PROFILE

Note:

Refer to Figure 1 for General Notes.

MINNESOTA
DEPARTMENT OF TRANSPORTATION
UNDERWATER BRIDGE INSPECTION

STRUCTURE NO. 7780
CSAH 133 OVER A DITCH
ST. LOUIS COUNTY

UPSTREAM AND DOWNSTREAM
FASCIA PROFILES

Drawn By: MBP	COLLINS ENGINEERS INC 123 North Wacker Drive Suite 900 Chicago, IL 60606 (312) 704-9300 www.collinsengr.com	Date: NOV. 2012
Checked By: LJ		Scale: 1"=5'
Code: 74237780		Figure No.: 2

MINNESOTA DEPARTMENT OF TRANSPORTATION

OFFICE OF BRIDGES AND STRUCTURES

DAILY DIVING REPORT

INSPECTORS: Collins Engineers, Inc. DATE: September 27, 2012

ON-SITE TEAM LEADER: Daniel G. Stromberg, P.E.

BRIDGE NO: 7836 WEATHER: Sunny, 60° F

WATERWAY CROSSED: A Ditch

DIVING OPERATION: _____ SCUBA _____ SURFACE SUPPLIED AIR

X OTHER Inspection by Wading

PERSONNEL: Clayton Brookins, Marc B. Parker

EQUIPMENT: Dry Suit, Sounding Pole, Hand Tools, Camera, Underwater Light

TIME IN WATER: 1:50 P.M.

TIME OUT OF WATER: 2:15 P.M.

WATERWAY DATA: VELOCITY None/Negligible

VISIBILITY 2 feet

DEPTH 0.6 feet maximum at the downstream opening

ELEMENTS INSPECTED: Box 1 and Box 2

REMARKS: Overall, the substructure units inspected were found to be in satisfactory to fair condition with some defects of only minor structural significance. The concrete of the walls, haunches and ceiling exhibited light to heavy scaling with a maximum penetration of 3/4 inch. A heavy accumulation of timber debris was observed obstructing the upstream opening of Box 1. The culvert had a layer of silty sand throughout the length of both boxes.

FURTHER ACTION NEEDED: _____ YES X NO

The timber debris accumulation in Box 1 did not significantly affect the channel flow since the flow was very low, but ideally the debris should be removed before it becomes more detrimental. If the debris accumulation increases in size or density or the flow through the culvert increases, it may become more imperative to remove the debris to reduce excessive lateral loads on the culvert, limit further debris accumulation, and reduce the likelihood of channel bottom degradation resulting from obstructed flow.

Reinspect the submerged substructure units at the normal maximum recommended (NBIS) interval of sixty (60) months.

At the time of inspection of the submerged substructure units of Structure No. 7780, the waterline and water flow were noticeably lower than the mean values. As a result the inspection could be safely carried out by means of wading. During future inspections of the substructure units, a higher waterline elevation and/or increased flow may result in lower overhead clearance with a possibility of a confined space entrance requirements which may require a qualified dive team to safely carry out the inspection. If future inspections determine that the waterline consistently remains at a level which an inspection can be safely performed by the means of wading, consideration may be given to removing the structure from the underwater inspection list.

MINNESOTA DEPARTMENT OF TRANSPORTATION
OFFICE OF BRIDGES AND STRUCTURES

UNDERWATER INSPECTION CONDITION RATING FORM

BRIDGE NO. 7780
INSPECTORS Collins Engineers, Inc.
ON-SITE TEAM LEADER Daniel G. Stromberg, P.E.
WATERWAY CROSSED A Ditch

INSPECTION DATE September 27, 2012

NOTE: USE ALL APPLICABLE CONDITION DEFINITIONS AS DEFINED IN THE MINNESOTA RECORDING AND CODING GUIDE INCLUDING GENERAL, SUBSTRUCTURE, CHANNEL AND PROTECTION, AND CULVERTS AND WALL DEFINITIONS TO COMPLETE THIS FORM.

CONDITION RATING

			SUBSTRUCTURE						CHANNEL					GENERAL					
UNIT REFERENCE NO.	UNIT DESCRIPTION	MAXIMUM DEPTH OF WATER	PILING	REINFORCED CONCRETE BOX CULVERT	FOOTINGS	DISPLACEMENT	OTHER (HEADWALL/WINGWALL)	OVERALL SUBSTRUCTURE CONDITION CODE*	SCOUR	EMBANKMENT EROSION	EMBANKMENT PROTECTION	OTHER (SILT & DEBRIS BUILDUP)	OVERALL CHANNEL & PROTECTION CONDITION	CONCRETE	STEEL	TIMBER	LOSS OF SECTION	PREVIOUS REPAIR OR MAINTENANCE	OTHER
		1	2	3	4	5	6	7	8	9	10	11	12	13	14	15	16	17	18
1	Concrete Culvert Box 1	0.6’	N	6	N	N	5	5	N	7	N	7	7	5	N	N	5	N	N
2	Concrete Culvert Box 2	1.1’	N	6	N	N	5	5	N	7	N	4	4	5	N	N	5	N	N

*UNDERWATER PORTION ONLY

REMARKS: Overall, the substructure units inspected were found to be in satisfactory to fair condition with some defects of only minor structural significance. The concrete of the walls, haunches and ceiling exhibited light to heavy scaling with a maximum penetration of 3/4 inch. A heavy accumulation of timber debris was observed obstructing the upstream opening of Box 1. The culvert had a layer of silty sand throughout the length of both boxes.

NOTES: ATTACH SKETCHES AS NEEDED, IDENTIFY REMARK BY REFERRING TO UNIT REFERENCE NO. AND REMARK NO.
USE GENERAL SECTION TO IDENTIFY OVERALL PRESENCE OF SPALLS, CRACKS, CORROSION, ETC.