UNDERWATER BRIDGE INSPECTION REPORT

STRUCTURE NO. 88594

CSAH NO. 44

OVER THE

INDIAN CREEK

ST. LOUIS COUNTY

SEPTEMBER 25, 2012

PREPARED FOR THE

MINNESOTA DEPARTMENT OF TRANSPORTATION

BY

COLLINS ENGINEERS, INC.

JOB NO. 7423

MINNESOTA DEPARTMENT OF TRANSPORTATION
UNDERWATER BRIDGE INSPECTION

REPORT SUMMARY:

The substructure units inspected at Bridge No. 88594, the North and South Abutments, were in fair condition. The North Abutment exhibited noticeable movement with backfill escaping through gaps in the backwall planking. Repair measures, consisting of steel beams and shims, have held the pile cap in its present position; however, the North Abutment should be further stabilized and repaired. Several of the timber piles exhibited splitting up to 1/2 inch wide and delamination around the entire circumference. The general condition of the substructure and channel bottom has not changed significantly since the previous underwater inspection. The settling bituminous approaches have been leveled using more bituminous material since the previous underwater inspection.

INSPECTION FINDINGS:

(A) The east end of the pile cap at the South Abutment exhibited a 4 inch wide vertical split, which extended from the end of the pile cap to Pile 2.

(B) Three timber piles at the North Abutment exhibited splitting and delamination around the entire circumference with the outer 1-inch thick shell being most affected.

(C) The pile cap at the North Abutment was rotated towards the embankment and was held in place with steel beams and shims. A section of the backwall along the west end of the North Abutment exhibited a 1 foot wide by 6 inch high gap with 6 inches of penetration and signs of backfill escaping.

(D) Pile 6 at the South Abutment exhibited a 1/2-inch-wide, 1.5-inch-deep split extending from the pile cap to the channel bottom.

(E) The bottom plank of the southwest wingwall was 6 inches above the channel bottom with 1 foot of penetration behind the wall.

(F) There is evidence of movement of the backwall planking allowing loss of backfill and embankment at both the North and South Abutments. The settling approach has been filled with bituminous material to level the roadway since the previous underwater inspection.

RECOMMENDATIONS:

(A) Ideally, the North Abutment backwall should be rebuilt and/or repaired to prevent further loss of backfill under the approach. Given the overall condition of the bridge, complete replacement of the structure should also be a consideration. Until repairs and/or replacement can be made, above and below water inspection should monitor the North Abutment.

(B) At the time of inspection of the submerged substructure units of Structure No. 88594, the waterline and water flow were noticeably lower than the mean values. As a result the inspection could be safely carried out by means of wading. During future inspections of the substructure units, a higher waterline elevation and/or increased flow may result in lower overhead clearance with a possibility of a confined space entrance requirements which may require a qualified dive team to safely carry out the inspection. If future inspections determine that the waterline consistently remains at a level which an inspection can be safely performed by the means of wading, consideration may be given to removing the structure from the underwater inspection list.

(C) Reinspect the submerged substructure units at the normal maximum recommended (NBIS) interval of sixty (60) months.

Respectfully submitted,

Inspection Team Leader:
Daniel G. Stromberg, P.E.

COLLINS ENGINEERS, INC.

Daniel G. Stromberg
Registered Professional
Engineer, State of Minnesota

MINNESOTA DEPARTMENT OF TRANSPORTATION
UNDERWATER BRIDGE INSPECTION

1. BRIDGE DATA

Bridge Number: 88594

Feature Crossed: Indian Creek

Feature Carried: CSAH NO. 44

Location: St. Louis County

Bridge Description: The bridge superstructure consists of a one span timber deck on multiple steel stringers. The superstructure is supported by two timber pile abutments.

2. INSPECTION DATA

Professional Engineer Diver: Daniel G. Stromberg, P.E., S.E.

Dive Team: Clayton G. Brookins, Marc B. Parker

Date: September 25, 2012

Weather Conditions: Cloudy, 50° F

Underwater Visibility: 1 foot

Waterway Velocity: None/Negligible

3. SUBSTRUCTURE INSPECTION DATA

Substructure Inspected: North and South Abutments.

General Shape: The North Abutment consists of a single row of six timber piles in front of timber planking which forms a breastwall, and the South Abutment consists of two rows of six timber piles in front of timber planking which forms a breastwall. Both abutments have skewed timber pile and plank wingwalls.

Maximum Water Depth at Substructure Inspected: Approximately 2.2 foot.

4. WATERLINE DATUM

Water Level Reference: The top of pile cap at downstream end of the North Abutment.

Water Surface: The waterline was approximately 1.6 feet below reference.
Assumed Waterline Elevation = 98.0.

5. NBIS CODING INFORMATION (Minnesota specific codes are used for 92B and 113)

Item 60: Substructure: Code __5__

Item 61: Channel and Channel Protection: Code __7__

Item 92B: Underwater Inspection: Code A/09/12

Item 113: Scour Critical Bridges: Code__I____

Bridge is scour critical because abutment or pier foundation is rated as unstable due to observed scour at bridge site.
_____ Yes __X__No

Photograph 1. Overall View of the Structure, Looking Southwest.

Photograph 2. View of the North Abutment, Looking Northwest.

Photograph 3. View of the South Abutment, Looking Southwest.

Photograph 4. View of the South Abutment Showing Displacement, Looking West.

Photograph 5. View of Repairs made to the Approach Roadway over the North Abutment West side, Looking Southeast.

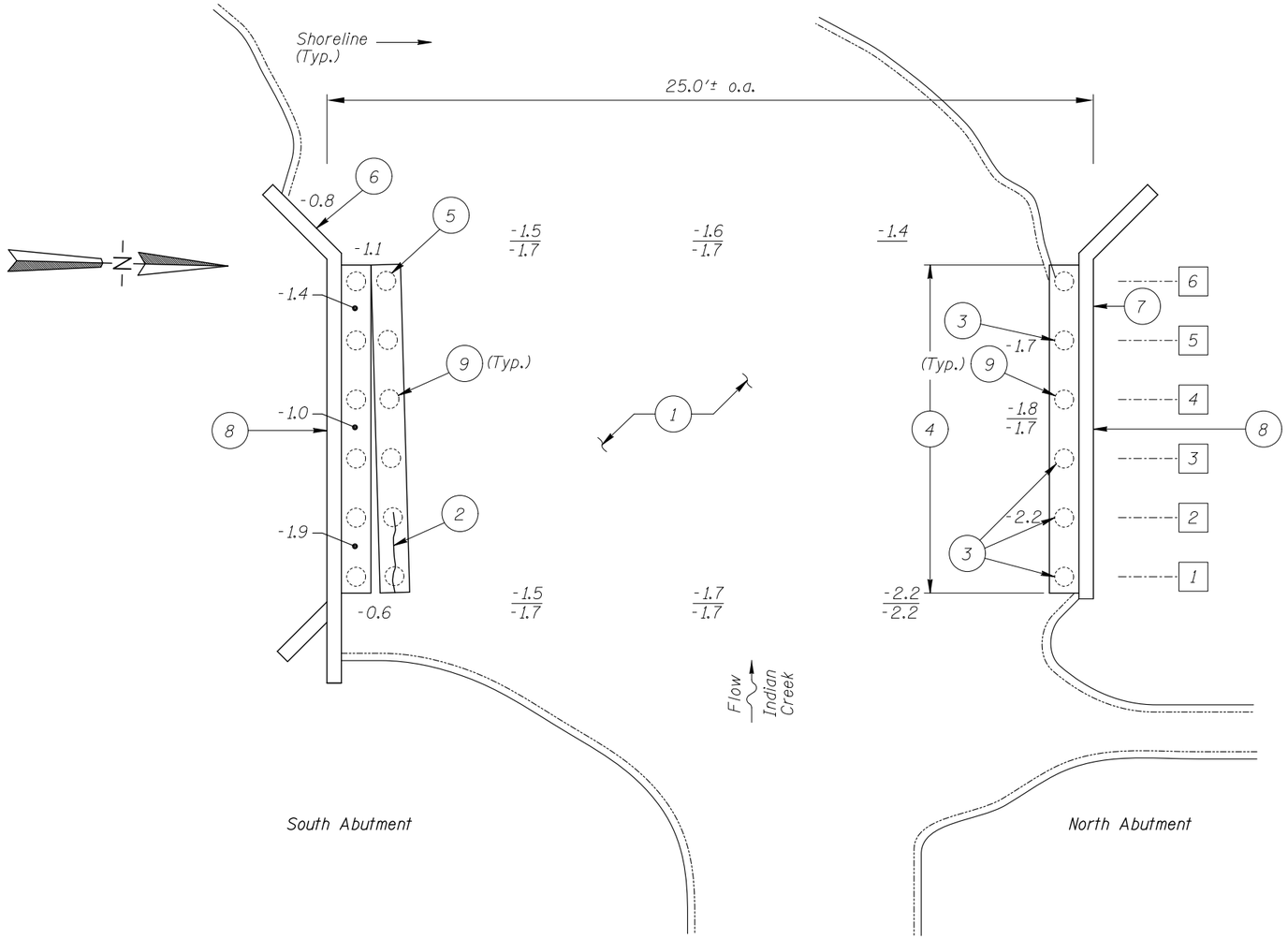

SOUNDING PLAN

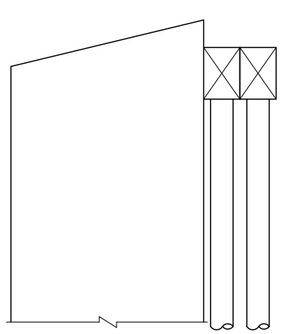

END VIEW OF SOUTH ABUTMENT

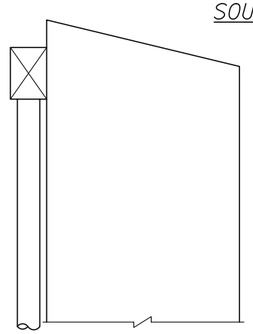

END VIEW OF NORTH ABUTMENT

GENERAL NOTES:

1. The South and North Abutments were inspected underwater.
2. At the time of inspection on September 25, 2012, the waterline was located approximately 1.6 feet below the top of the cap at the downstream end of the North Abutment. Since insufficient bridge elevation information was available a reference elevation of 100.0 was assumed. Based on the assumed reference the waterline elevation was 98.4.
3. Soundings indicate the water depth at the time of inspection and are measured in feet.
4. Soundings were taken parallel to the bridge at 1/4 point intervals between the substructure units.

INSPECTION NOTES:

1. The channel bottom consisted of silty sand allowing a maximum probe rod penetration of 1.5 feet.
2. The pile cap exhibited a 4-inch-wide vertical split which extended from the end of the pile cap to Pile 2. Also, there was up to 35% loss of section over the first pile related to decay due to the splitting.
3. The timber pile exhibited splitting and delamination around its entire circumference with the outer 1.5 inch thick shell being the most affected.
4. The pile cap was rotated towards the embankment and was held in place with steel beams and shims.
5. The timber pile exhibited a 1/2-inch-wide, 1.5-inch-deep split extending from the pile cap to the channel bottom.
6. Bottom plank was 6 inches above channel bottom with 1 foot of penetration behind wall. There was apparent loss of backfill between backwall and wingwall.
7. Portion of backwall exhibited 1-foot-wide by 6-inch-high gap with 6 inches of penetration and signs of backfill escaping.
8. There was evidence of movement of the backwall planking allowing loss of backfill/embankment on both North and South Abutments.
9. Timber piles were generally sound with random checking or spiltting up to 1/16 in wide.

Legend

-3.0	Sounding Depth (9/25/12)
-3.0	Sounding Depth (8/24/07)
◌	Timber Pile
1	Pile Identification Designation

Note:

All soundings based on 2012 waterline location.

MINNESOTA
DEPARTMENT OF TRANSPORTATION
UNDERWATER BRIDGE INSPECTION

STRUCTURE NO. 88594
CSAH 44 OVER THE INDIAN CREEK
ST. LOUIS COUNTY

INSPECTION AND SOUNDING PLAN

Drawn By: BMS	COLLINS ENGINEERS INC. 123 North Wacker Drive Suite 900 Chicago, IL 60606 (312) 704-9300 www.collinsengr.com	Date: NOV. 2012
Checked By: LJ		Scale: NTS
Code: 742388594		Figure No.: 1

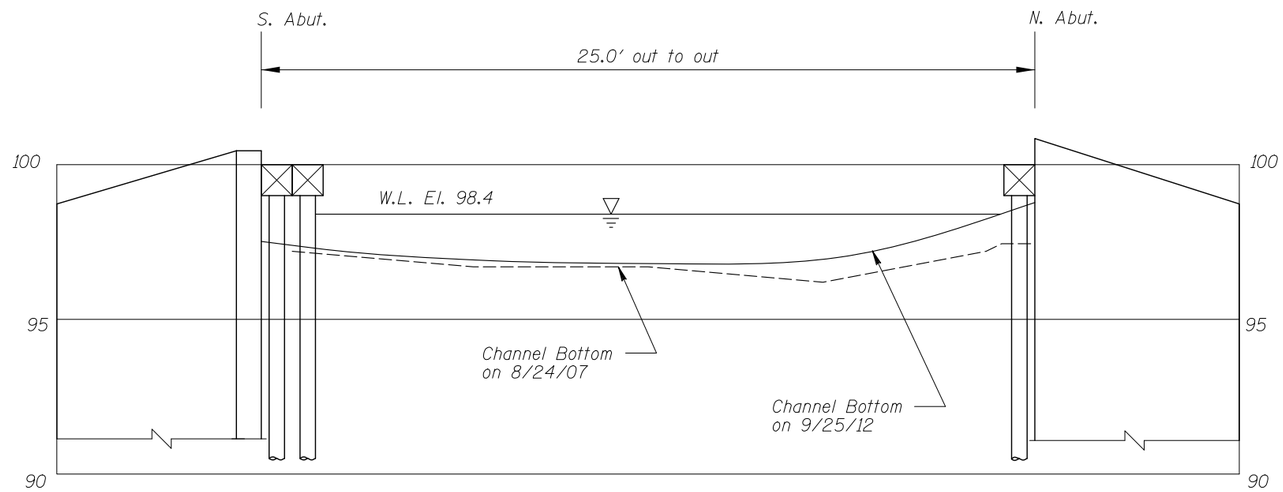

UPSTREAM FASCIA PROFILE

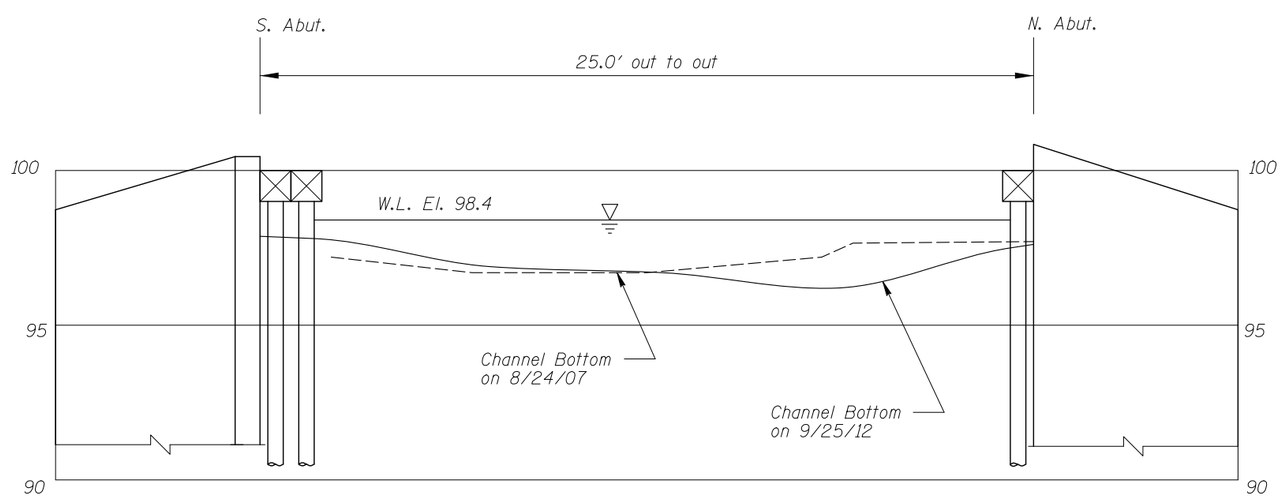

DOWNSTREAM FASCIA PROFILE

Note:

Refer to Figure 1 for General Notes.

MINNESOTA
DEPARTMENT OF TRANSPORTATION
UNDERWATER BRIDGE INSPECTION

STRUCTURE NO. 88594
CSAH 44 OVER THE INDIAN CREEK
ST. LOUIS COUNTY

UPSTREAM AND DOWNSTREAM
FASCIA PROFILES

Drawn By: BMS	COLLINS ENGINEERS INC 123 North Wacker Drive Suite 900 Chicago, IL 60606 (312) 704-9300 www.collinsengr.com	Date: NOV. 2012
Checked By: LJ		Scale: 1"=5'
Code: 742388594		Figure No.: 2

MINNESOTA DEPARTMENT OF TRANSPORTATION
OFFICE OF BRIDGES AND STRUCTURES

DAILY DIVING REPORT

INSPECTORS: Collins Engineers, Inc. DATE: September 25, 2012

ON-SITE TEAM LEADER: Daniel G. Stromberg, P.E., S.E.

BRIDGE NO: 88594 WEATHER: Cloudy, 50° F

WATERWAY CROSSED: Indian Creek

DIVING OPERATION: _____ SCUBA _____ SURFACE SUPPLIED AIR

X OTHER Wading, due to low water levels

PERSONNEL: Clayton G. Brookins, Marc B. Parker

EQUIPMENT: Dry Suit, Sounding Pole, Probe Rod, Camera, Hand Tools

TIME IN WATER: 1:20 P.M.

TIME OUT OF WATER: 1:50 P.M.

WATERWAY DATA: VELOCITY None/Negligible

VISIBILITY 1.0 Foot

DEPTH 2.2 feet maximum in the channel

ELEMENTS INSPECTED: North and South Abutments

REMARKS: The substructure units inspected underwater, the North and South Abutments, were in fair condition. The North Abutment exhibited noticeable movement with backfill escaping through gaps in the backwall planking. Repair measures, consisting of steel beams and shims, have held the pile cap in its present position; however, the North Abutment should be further stabilized and repaired. Several of the timber piles exhibited splitting up to 1/2 inch wide and delamination around the entire circumference. The general condition of the substructure and channel bottom has not changed significantly since the previous underwater inspection. The settling bituminous approaches have been leveled using more bituminous material since the previous underwater inspection.

FURTHER ACTION NEEDED: ____X____ YES _____ NO

Ideally, the North Abutment backwall should be rebuilt and/or repaired to prevent further loss of backfill under the approach. Given the overall condition of the bridge, complete replacement of the structure should also be a consideration. Until repairs and/or replacement can be made, above and below water inspection should monitor the North Abutment.

At the time of inspection of the submerged substructure units of Structure No. 88594, the waterline and water flow were noticeably lower than the mean values. As a result the inspection could be safely carried out by means of wading. During future inspections of the substructure units, a higher waterline elevation and/or increased flow may result in lower overhead clearance with a possibility of a confined space entrance requirements which may require a qualified dive team to safely carry out the inspection. If future inspections determine that the waterline consistently remains at a level which an inspection can be safely performed by the means of wading, consideration may be given to removing the structure from the underwater inspection list.

Reinspect the submerged substructure units at the normal maximum recommended (NBIS) interval of sixty (60) months.

MINNESOTA DEPARTMENT OF TRANSPORTATION
OFFICE OF BRIDGES AND STRUCTURES

UNDERWATER INSPECTION CONDITION RATING FORM

BRIDGE NO. 88594
INSPECTORS Collins Engineers, Inc.
ON-SITE TEAM LEADER Daniel G. Stromberg, P.E., S.E.
WATERWAY CROSSED Indian Creek

INSPECTION DATE September 25, 2012

NOTE: USE ALL APPLICABLE CONDITION DEFINITIONS AS DEFINED IN THE MINNESOTA RECORDING AND CODING GUIDE INCLUDING GENERAL, SUBSTRUCTURE, CHANNEL AND PROTECTION, AND CULVERTS AND WALL DEFINITIONS TO COMPLETE THIS FORM.

CONDITION RATING

			SUBSTRUCTURE						CHANNEL					GENERAL					
UNIT REFERENCE NO.		MAXIMUM DEPTH OF WATER	PILING	COLUMNS, SHAFTS, OR FACES*	FOOTINGS	DISPLACEMENT	OTHER (BACKWALL)	OVERALL SUBSTRUCTURE CONDITION CODE*	SCOUR	EMBANKMENT EROSION	EMBANKMENT PROTECTION	OTHER (DRIFT/DEBRIS)	OVERALL CHANNEL & PROTECTION CONDITION	CONCRETE	STEEL	TIMBER	LOSS OF SECTION	PREVIOUS REPAIR OR MAINTENANCE	OTHER
	UNIT DESCRIPTION	1	2	3	4	5	6	7	8	9	10	11	12	13	14	15	16	17	18
	North Abutment	2.2’	5	N	N	5	5	5	7	N	N	N	7	N	N	5	N	N	N
	South Abutment	1.9’	6	N	N	6	5	5	7	N	N	N	7	N	N	6	N	N	N

*UNDERWATER PORTION ONLY

REMARKS: The substructure units inspected underwater, the North and South Abutments, were in fair condition. The North Abutment exhibited noticeable movement with backfill escaping through gaps in the backwall planking. Repair measures, consisting of steel beams and shims, have held the pile cap in its present position; however, the North Abutment should be further stabilized and repaired. Several of the timber piles exhibited splitting up to 1/2 inch wide and delamination around the entire circumference. The general condition of the substructure and channel bottom has not changed significantly since the previous underwater inspection. The settling bituminous approaches have been leveled using more bituminous material since the previous underwater inspection.

NOTES: ATTACH SKETCHES AS NEEDED, IDENTIFY REMARK BY REFERRING TO UNIT REFERENCE NO. AND REMARK NO.
USE GENERAL SECTION TO IDENTIFY OVERALL PRESENCE OF SPALLS, CRACKS, CORROSION, ETC.