UNDERWATER BRIDGE INSPECTION REPORT

STRUCTURE NO. 88757

CR 600

OVER THE

LITTLE FORK RIVER

ST. LOUIS COUNTY

SEPTEMBER 18, 2012

PREPARED FOR THE

MINNESOTA DEPARTMENT OF TRANSPORTATION

BY

COLLINS ENGINEERS, INC.

JOB NO. 7423

MINNESOTA DEPARTMENT OF TRANSPORTATION
UNDERWATER BRIDGE INSPECTION

REPORT SUMMARY:

The substructure units inspected below water at Structure No. 88757, Bents 1, 2 and 3, were found to be in satisfactory condition with only minor defects of structural significance. The timber of the piles and cross-bracing was generally sound allowing an awl penetration of 1/8 to 1/4 inch and exhibiting random splitting or checking up to 1/4 inch wide and 1 inch deep. Three piles exhibited a 1/2 inch wide and up to 3 inch deep split. The cross-brace on the north face of Bent 2 exhibited an area of timber section loss and a loose connection at one pile. The channel bottom appeared stable with no signs of scour. Random timber and other debris was scattered throughout the channel.

INSPECTION FINDINGS:

(A) The channel bottom material typically consisted of rocks, gravel, and sand with a maximum probe rod penetration of 1 foot. Random timber and other debris was scattered throughout the channel.

(B) The timber piles were generally sound allowing a typical awl penetration of less than 1/8 inch. The piles typically exhibited splitting or checking that was 1/4 inch wide and 1 inch deep.

(C) The timber cross-bracing was generally sound allowing a typical awl penetration of 1/4 inch. The cross-bracing exhibited random minor splitting.

(D) Pile A of Bent 1 exhibited a split, 1/2 inch wide and 2.5 inches deep, on the west face extending from the top of the pile down 2 feet.

(E) Pile A of Bent 3 exhibited a split, 1/2 inch wide and 3 inches deep, on the south face extending from the top of the pile down 2.5 feet.

(F) Pile F of Bent 3 exhibited a split, 1/2 inch wide and 3 inches deep, on the south face extending from the top of the pile down 4 feet.

(G) The timber cross-brace on the north face of Bent 2 had a loose connection at Pile F. The cross-brace was separated from the pile by 3 inches. The cross-brace exhibited a 4 inch wide area (the bottom 4 inches of the 3 inch by 12 inch brace) of timber section loss extending from Pile E to the east end of Bent 1.

(H) Random abandoned timber piles were observed throughout the channel extending from the channel bottom to 1 to 3 feet above the waterline.

RECOMMENDATIONS:

(A) The inspection of the submerged substructure units of Structure No. 88757 can most likely be accomplished in the future without using a dive team. To perform the underwater inspection, a properly equipped qualified inspector will have to enter the water during a period of low flow. As channel bottom contours and depths of flow can change quickly, it is recommended that lead line soundings of water depth be taken along the upstream and downstream fascias to determine whether wading is possible prior to beginning the inspection. If conditions are unsafe for inspection by wading, then an underwater inspection with the use of a dive team will be required.

(B) Reinspect the submerged substructure units at the normal maximum recommended (NBIS) interval of sixty (60) months.

Respectfully submitted,

Inspection Team Leader:

Nicholas R. Triandafilou, P.E.

PROFESSIONAL ENGINEER
I hereby certify that this plan, specification, or report was prepared by me or under my direct supervision and that I am a duly Licensed Professional Engineer under the laws of the State of Minnesota.

Daniel G. Stromberg

Date 6/30/14 License # 21491

COLLINS ENGINEERS, INC.

Daniel G. Stromberg
Registered Professional
Engineer, State of Minnesota

MINNESOTA DEPARTMENT OF TRANSPORTATION
UNDERWATER BRIDGE INSPECTION

1. BRIDGE DATA

Bridge Number: 88757

Feature Crossed: Little Fork River

Feature Carried: CR 600

Location: St. Louis County

Bridge Description: The super structure consists of a timber deck supported by steel beams. The superstructure is supported by two timber abutments and three timber pile bents.

2. INSPECTION DATA

Professional Engineer Diver: Nicholas R. Triandafilou, P.E.

Dive Team: Marc B. Parker, Clayton Brookins

Date: September 18, 2012

Weather Conditions: Sunny, 60°F

Underwater Visibility: < 0.5 feet

Waterway Velocity: None/Negligible

3. SUBSTRUCTURE INSPECTION DATA

Substructure Inspected: Bents 1,2 and 3

General Shape: The superstructure consists of a timber deck supported by steel I-beams. The superstructure is supported by two timber abutments and 3 pile bents. Bent 1, 2 and 3 consist of six 12 inch diameter timber piles labeled A through F from south to north with a 12 inch by 12 inch pile cap. Each pile bent has two diagonal 3 inch by 12 inch cross-bracing boards.

Maximum Water Depth at Substructure Inspected: Approximately 2.4 feet.

4. WATERLINE DATUM

Water Level Reference: The top of the pile cap at the downstream nose of Bent 2.

Water Surface: The waterline was approximately 7.0 feet below reference.
Assumed Waterline Elevation = 93.0 feet.

5. NBIS CODING INFORMATION (Minnesota specific codes are used for 92B and 113)

Item 60: Substructure Condition: Code __6____

Item 61: Channel and Channel Protection: Code ___6___

Item 92B: Underwater Inspection: Code _A/09/12

Item 113: Scour Critical Bridges: Code__K/12_

Bridge is scour critical because abutment or pier foundation is rated as unstable due to observed scour at bridge site.

_____ Yes __X__ No

6. STRUCTURAL ELEMENT CONDITION RATING

Item #	Element Description	Quantity	Unit	Conditions				
				1	2	3	4	5
228	Timber Piling	18	EA	0	18	0	0	n/a
361	Scour	1	EA	1	0	0	n/a	n/a
985	Slopes and Slope Protection	1	EA	1	0	0	n/a	n/a

Photograph 1. Overall View, Looking Northwest.

Photograph 2. View of the South Abutment, Looking Southwest.

Photograph 3. View of Bent 1, Looking Northeast.

Photograph 4. View of Bent 2, Looking Northeast.

Photograph 5. View of Bent 3, Looking Southeast.

Photograph 6. View of the North Abutment, Looking North.

Photograph 7. View of the Typical Timber Pile Condition, Looking East.

Photograph 8. View Cross-brace on North Face of Bent 2 with Timber Loss of Section, Looking Northwest.

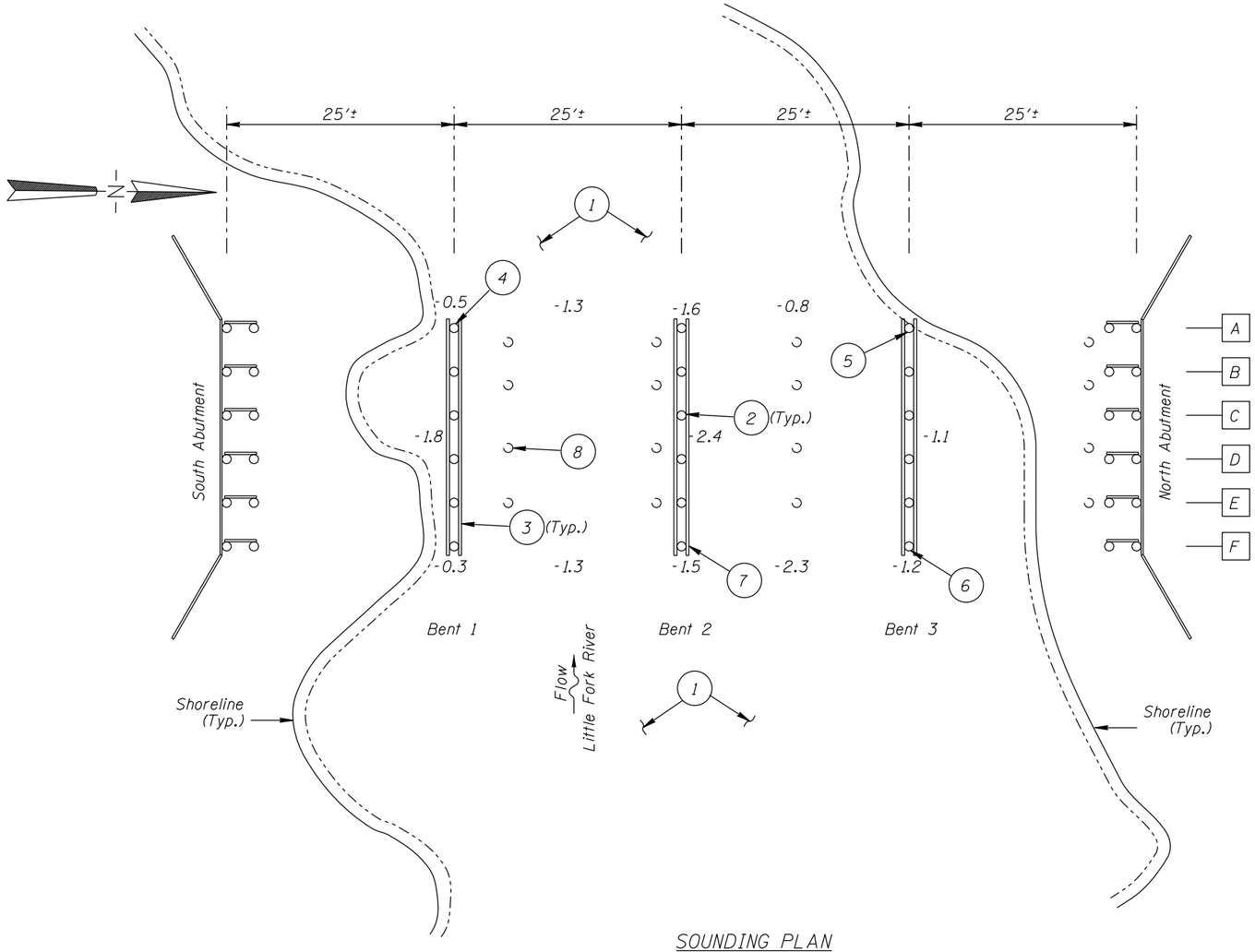

SOUNDING PLAN

INSPECTION NOTES:

1. The channel bottom material typically consisted of rocks, gravel, and sand with a maximum probe rod penetration of 1 foot. Random timber and other debris was scattered throughout the channel.

2. The timber piles were generally sound allowing a typical awl penetration of less than 1/8 inch. The piles typically exhibited splitting or checking that was 1/4 inch wide and 1 inch deep.

3. The timber cross-bracing was generally sound allowing a typical awl penetration of 1/4 inch. The cross-bracing exhibited random minor splitting.

4. Pile A of Bent 1 exhibited a split, 1/2 inch wide and 2.5 inches deep, on the west face extending from the top of the pile down 2 feet.

5. Pile A of Bent 3 exhibited a split, 1/2 inch wide and 3 inches deep, on the south face extending from the top of the pile down 2.5 feet.

6. Pile F of Bent 3 exhibited a split, 1/2 inch wide and 3 inches deep, on the south face extending from the top of the pile down 4 feet.

7. The timber cross-brace on the north face of Bent 2 had a loose connection at Pile F. The cross-brace was separated from the pile by 3 inches. The cross-brace exhibited a 4 inch wide area (the bottom 4 inches of the 3 inch by 12 inch brace) of timber section loss extending from Pile E to the east end of Bent 1.

8. Random abandoned timber piles were observed throughout the channel extending from the channel bottom to 1 to 3 feet above the waterline.

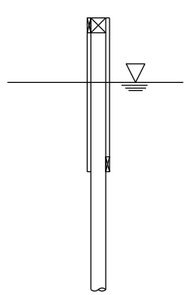

TYPICAL END VIEW OF BENTS

GENERAL NOTES:

1. Bents 1, 2 and 3 were inspected underwater.

2. At the time of inspection on September 18, 2012, the waterline was located approximately 7.0 feet below the top of the pile cap at the downstream end of Bent 2. Since elevation information was not available a reference elevation of 100.0 was assumed. Based on the assumed reference the waterline elevation was 93.0.

3. Soundings indicate the water depth at the time of inspection and are measured in feet.

4. Soundings were taken parallel to the bridge at 1/2 point intervals between the substructure units.

Legend

-17.0	Sounding Depth from Waterline (9/18/12)
A	Pile Identification Designation
○	12"ϕ Timber Pile
◠	12"ϕ Abandoned Timber Pile
1	Inspection Note Number

Note:

Refer to Figure 1 for General Notes.

MINNESOTA
DEPARTMENT OF TRANSPORTATION
UNDERWATER BRIDGE INSPECTION

STRUCTURE NO. 88757
CR 600 OVER THE THE LITTLE FORK RIVER
ST. LOUIS COUNTY

UPSTREAM AND DOWNSTREAM FASCIA PROFILES

Drawn By: MBP	COLLINS ENGINEERS INC 123 North Wacker Drive Suite 900 Chicago, IL 60606 (312) 704-9300 www.collinsengr.com	Date: OCTOBER, 2012
Checked By: LJ		Scale: 1"=15'
Code: 742388757		Figure No.: 2

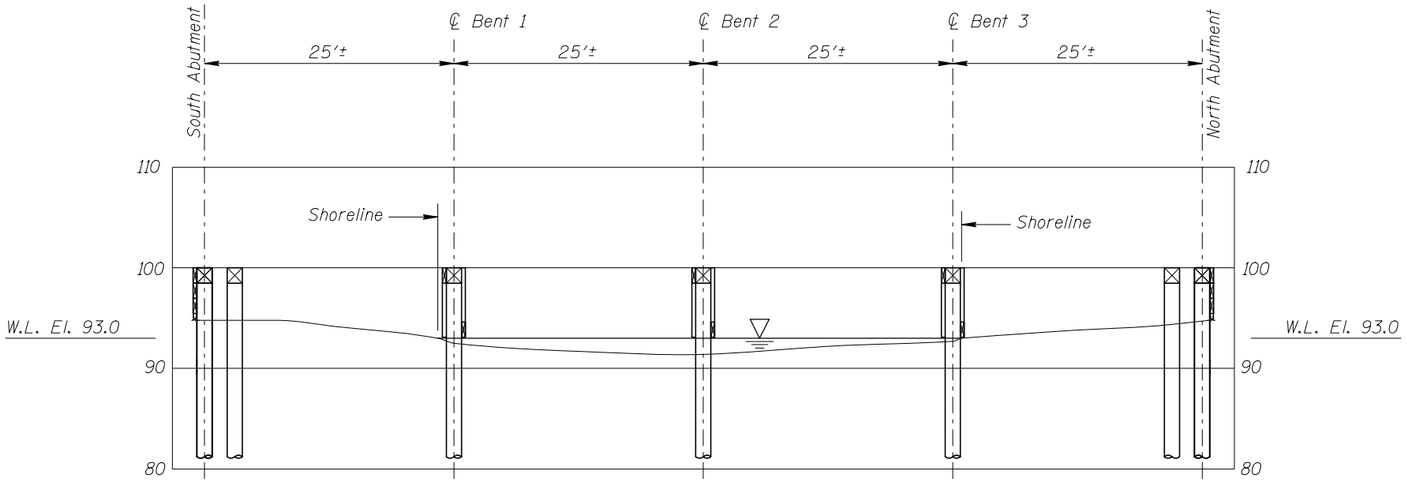

UPSTREAM FASCIA PROFILE

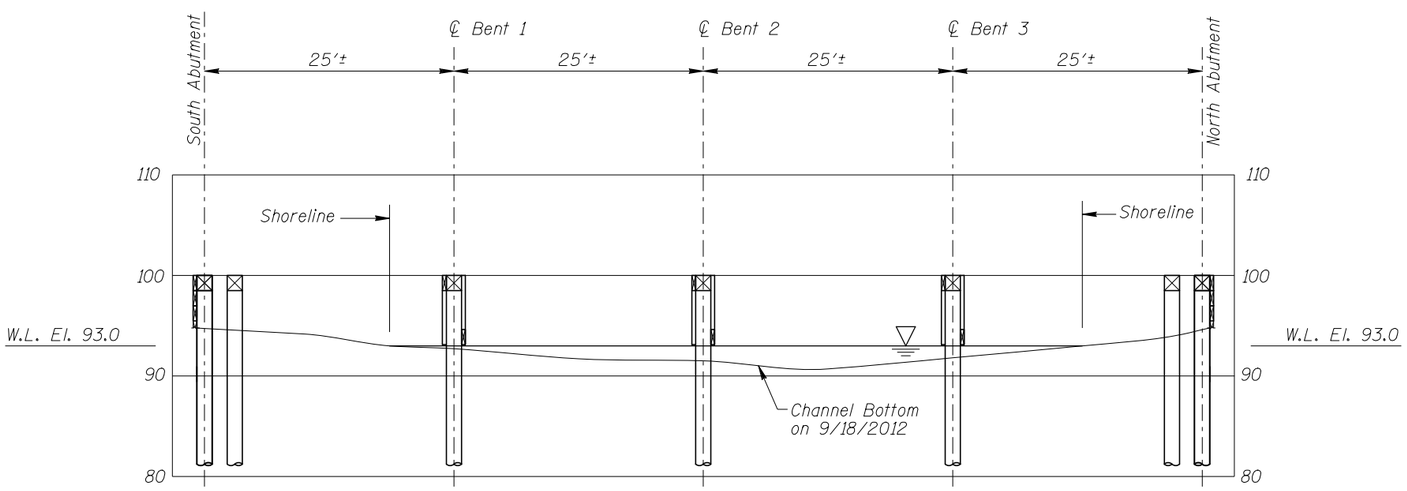

DOWNSTREAM FASCIA PROFILE

Note:

Refer to Figure 1 for General Notes.

MINNESOTA
DEPARTMENT OF TRANSPORTATION
UNDERWATER BRIDGE INSPECTION

STRUCTURE NO. 88757
CR 600 OVER THE THE LITTLE FORK RIVER
ST. LOUIS COUNTY

UPSTREAM AND DOWNSTREAM
FASCIA PROFILES

Drawn By: MBP	COLLINS ENGINEERS INC 123 North Wacker Drive Suite 900 Chicago, IL 60606 (312) 704-9300 www.collinsengr.com	Date: OCTOBER, 2012
Checked By: LJ		Scale: 1"=15'
Code: 742388757		Figure No.: 2

MINNESOTA DEPARTMENT OF TRANSPORTATION
OFFICE OF BRIDGES AND STRUCTURES

UNDERWATER INSPECTION CONDITION RATING FORM

BRIDGE NO. 88757
INSPECTORS Collins Engineers, Inc.
ON-SITE TEAM LEADER Nicholas R. Triandafilou, P.E.
WATERWAY CROSSED Little Fork River

INSPECTION DATE September 18, 2012

NOTE: USE ALL APPLICABLE CONDITION DEFINITIONS AS DEFINED IN THE MINNESOTA RECORDING AND CODING GUIDE INCLUDING GENERAL, SUBSTRUCTURE, CHANNEL AND PROTECTION, AND CULVERTS AND WALL DEFINITIONS TO COMPLETE THIS FORM.

CONDITION RATING

			SUBSTRUCTURE						CHANNEL					GENERAL					
UNIT REFERENCE NO.	UNIT DESCRIPTION	MAXIMUM DEPTH OF WATER	PILING	COLUMNS, SHAFTS, OR FACES*	FOOTINGS	DISPLACEMENT	OTHER (CROSS-BRACING)	OVERALL SUBSTRUCTURE CONDITION CODE*	SCOUR	EMBANKMENT EROSION	EMBANKMENT PROTECTION	OTHER (DRIFT/DEBRIS)	OVERALL CHANNEL & PROTECTION CONDITION	CONCRETE	STEEL	TIMBER	LOSS OF SECTION	PREVIOUS REPAIR OR MAINTENANCE	OTHER
		1	2	3	4	5	6	7	8	9	10	11	12	13	14	15	16	17	18
1	Bent 1	1.8’	6	N	N	N	6	6	N	8	6	6	6	N	N	6	N	N	N
2	Bent 2	2.4’	6	N	N	N	6	6	N	8	6	6	6	N	N	6	N	N	N
3	Bent 3	1.2’	6	N	N	N	6	6	N	8	6	6	6	N	N	6	N	N	N

*UNDERWATER PORTION ONLY

REMARKS: Overall, the substructure units inspected underwater were found to be in satisfactory condition with only minor defects of structural significance. The timber of the piles and cross-bracing was generally sound allowing an awl penetration of 1/8 to 1/4 inch and exhibiting random splitting or checking up to 1/4 inch wide and 1 inch deep. Three piles exhibited a 1/2 inch wide and up to 3 inch deep split. The cross-brace on the north face of Bent 2 exhibited an area of timber section loss and a loose connection at one pile. The channel bottom appeared stable with no signs of scour. Random timber and other debris was scattered throughout the channel.

NOTES: ATTACH SKETCHES AS NEEDED, IDENTIFY REMARK BY REFERRING TO UNIT REFERENCE NO. AND REMARK NO.
USE GENERAL SECTION TO IDENTIFY OVERALL PRESENCE OF SPALLS, CRACKS, CORROSION, ETC.

MINNESOTA DEPARTMENT OF TRANSPORTATION

OFFICE OF BRIDGES AND STRUCTURES

DAILY DIVING REPORT

INSPECTORS: Collins Engineers, Inc. DATE: September 18, 2012

ON-SITE TEAM LEADER: Nicholas R. Triandafilou, P.E.

BRIDGE NO: 88757 WEATHER: Sunny, 60° F

WATERWAY CROSSED: Little Fork River

DIVING OPERATION: _____ SCUBA _____ SURFACE SUPPLIED AIR

X OTHER Inspection by Wading

PERSONNEL: Clayton Brookins, Marc B. Parker

EQUIPMENT: Dry Suit, Sounding Pole, Hand Tools, Camera, Underwater Light

TIME IN WATER: 2:20 P.M.

TIME OUT OF WATER: 3:20 P.M.

WATERWAY DATA: VELOCITY None/Negligible

VISIBILITY None/Negligible

DEPTH 2.4 feet maximum at Bent 2

ELEMENTS INSPECTED: Bents 1, 2 and 3

REMARKS: Overall, the substructure units inspected underwater were found to be in satisfactory condition with only minor defects of structural significance. The timber of the piles and cross-bracing was generally sound allowing an awl penetration of 1/8 to 1/4 inch and exhibiting random splitting or checking up to 1/4 inch wide and 1 inch deep. Three piles exhibited a 1/2 inch wide and up to 3 inch deep split. The cross-brace on the north face of Bent 2 exhibited an area of timber section loss and a loose connection at one pile. The channel bottom appeared stable with no signs of scour. Random timber and other debris was scattered throughout the channel.

FURTHER ACTION NEEDED: _____ YES ___X___ NO

The inspection of the submerged substructure units of Structure No. 88757 can most likely be accomplished in the future without using a dive team. To perform the underwater inspection, a properly equipped qualified inspector will have to enter the water during a period of low flow. As channel bottom contours and depths of flow can change quickly, it is recommended that lead line soundings of water depth be taken along the upstream and downstream fascias to determine whether wading is possible prior to beginning the inspection. If conditions are unsafe for inspection by wading, then an underwater inspection with the use of a dive team will be required.

Reinspect the submerged substructure units at the normal maximum recommended (NBIS) interval of sixty (60) months