UNDERWATER BRIDGE INSPECTION REPORT

STRUCTURE NO. 66508

RAVN STREET (MSAS NO. 108)

OVER THE

STRAIGHT RIVER

CITY OF FARIBAULT, RICE COUNTY

SEPTEMBER 12, 2012

PREPARED FOR THE

MINNESOTA DEPARTMENT OF TRANSPORTATION

BY

COLLINS ENGINEERS, INC.

JOB NO. 7423

MINNESOTA DEPARTMENT OF TRANSPORTATION
UNDERWATER BRIDGE INSPECTION

REPORT SUMMARY:

The substructure unit inspected at Bridge No. 66508, Pier 1, was sound and in good condition with no structurally significant defects observed. A moderate accumulation of timber debris was observed at the upstream end of the pier. A scour depression was also observed at the upstream end of the pier. Overall the channel bottom appeared stable with no significant changes since the previous inspection.

INSPECTION FINDINGS:

(A) Concrete was in smooth and sound condition.

(B) A moderate accumulation of timber debris consisting of 1-foot-diameter and smaller logs and branches was observed at the upstream nose and extended along the west face to the midpoint, along the east face for 10 feet, and from the channel bottom up to 1 foot above the waterline.

(C) A scour depression measuring 5 feet in radius by 1 foot deep was observed at the upstream nose of Pier 1.

(D) The channel bottom material at Pier 1 consisted of rocks and gravel with 2 inches of probe rod penetration.

RECOMMENDATIONS:

(A) Reinspect the submerged substructure units at the normal maximum recommended (NBIS) interval of sixty (60) months.

Inspection Team Leader

Roy Forsyth

Roy A. Forsyth, PE
Date 6/30/2014 License# 49270

Respectfully submitted,

PROFESSIONAL ENGINEER
I hereby certify that this plan, specification, or report was prepared by me or under my direct supervision and that I am a duly Licensed Professional Engineer under the laws of the State of Minnesota.

Daniel G. Stromberg

Date 6/30/14 License # 21491

COLLINS ENGINEERS, INC.

Daniel G. Stromberg
Registered Professional
Engineer, State of Minnesota

MINNESOTA DEPARTMENT OF TRANSPORTATION
UNDERWATER BRIDGE INSPECTION

1. BRIDGE DATA

Bridge Number: 66508

Feature Crossed: Straight River

Feature Carried: Ravn Street (MSAS No. 108)

Location: City of Faribault, Rice County

Bridge Description: The bridge consists of a continuous two span multiple steel girder superstructure supporting a reinforced concrete deck. The superstructure is supported by two reinforced concrete abutments and one reinforced concrete pier. No design drawings with foundation details were provided.

2. INSPECTION DATA

Professional Engineer/Team Leader: Roy A. Forsyth, P.E.

Dive Team: Brandon Corr, Charles Euwema

Date: September 12, 2012

Weather Conditions: Cloudy, 65° F

Underwater Visibility: 1.0 foot

Waterway Velocity: 2.0 ft/s

3. SUBSTRUCTURE INSPECTION DATA

Substructure Inspected: Pier 1

General Shape: The pier is a single stem hammerhead with oblong rectangular shaft and rounded ends. No foundation data was available.

Maximum Water Depth at Substructure Inspected: Approximately 2.0 feet.

4. WATERLINE DATUM

Water Level Reference: The top of the pier cap at the downstream end of the pier.

Water Surface: The waterline was approximately 15.6 feet below reference.
Assumed Waterline Elevation = 84.4

5. NBIS CODING INFORMATION (Minnesota specific codes are used for 92B and 113)

Item 60: Substructure: Code __7__

Item 61: Channel and Channel Protection: Code __7__

Item 92B: Underwater Inspection: Code _A/09/12

Item 113: Scour Critical Bridges: Code_I/07__

Bridge is scour critical because abutment or pier foundation is rated as unstable due to observed scour at bridge site.
_____ Yes __X__ No

6. STRUCTURAL ELEMENT CONDITION RATING

Item #	Element Description	Quantity	Unit	Conditions				
				1	2	3	4	5
210	Concrete Pier Wall	26	LF	26				

Photograph 1. View of Pier 1, Looking Southeast.

Photograph 2. View of West Abutment, Looking Southwest.

.

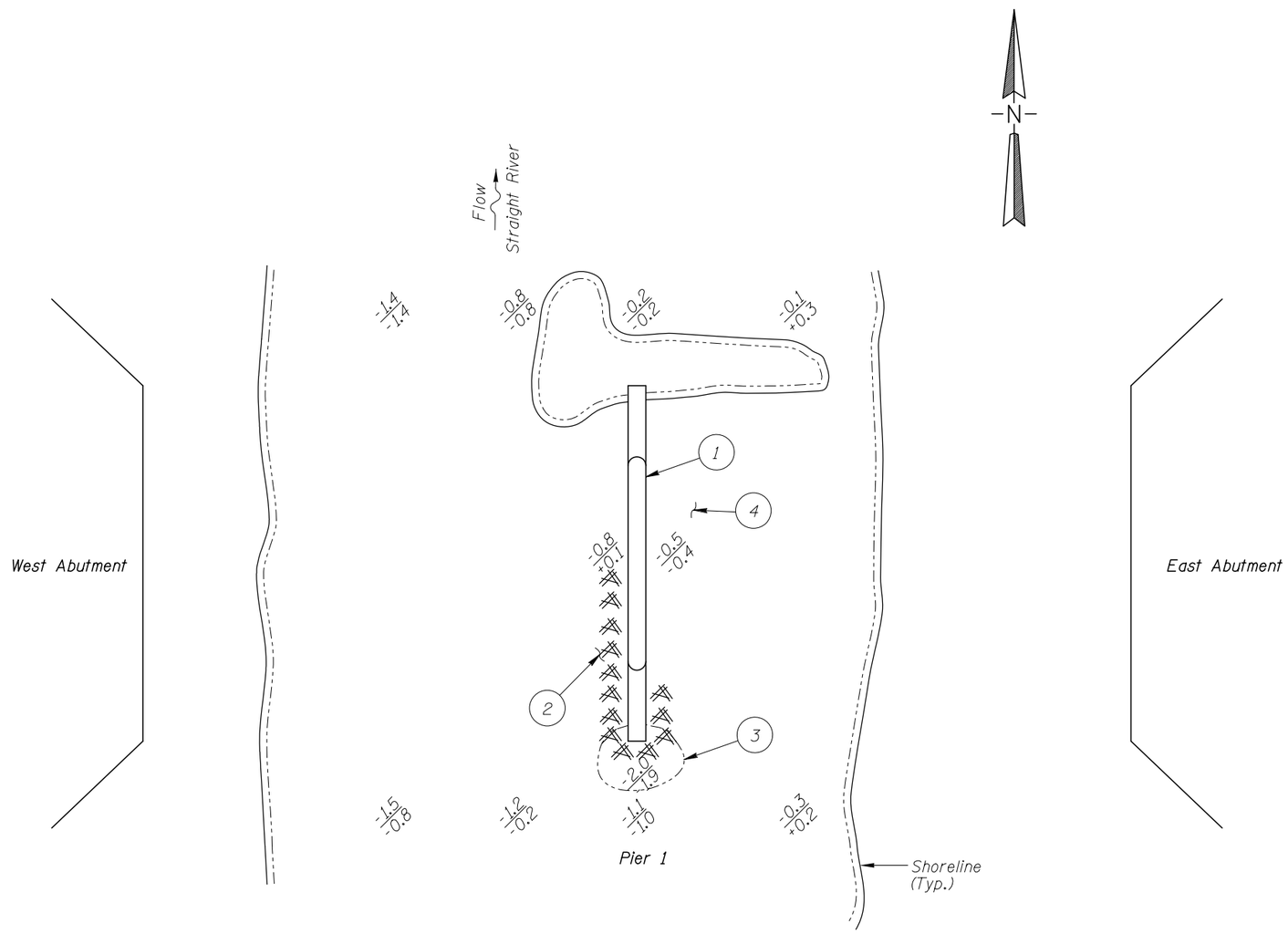

SOUNDINGS PLAN

INSPECTION NOTES:

1. Concrete was in smooth and sound condition.
2. A moderate accumulation of timber debris consisting of 1-foot-diameter and smaller logs and branches was observed at the upstream nose and extended along the west face to the midpoint, along the east face for 10 feet, and from the channel bottom up to 1 foot above the waterline.
3. A scour depression measuring 5 feet in radius by 1 foot deep was observed at the upstream nose of Pier 1.
4. The channel bottom material at Pier 1 consisted of rocks and gravel with 2 inches of probe rod penetration.

GENERAL NOTES:

1. The West Abutment and Pier 1 were inspected underwater.
2. At the time of inspection, on September 12, 2012, the waterline was located approximately 15.6 feet below the top of the pier cap on the downstream end of Pier 1. Since insufficient reference elevation information was available, an elevation of 100.0 was assumed. This corresponds to a waterline elevation of 84.4.
3. Soundings indicate the water depth at the time of inspection and are measured in feet.
4. Soundings were taken parallel to the bridge at 1/4 point intervals between the substructure units as well as around the substructure units.

Legend

-0.4	Sounding Depth (9/12/12)
-0.4	Sounding Depth (10/23/07)
	Timber Debris

MINNESOTA
DEPARTMENT OF TRANSPORTATION
UNDERWATER BRIDGE INSPECTION

STRUCTURE NO. 66508
OVER THE STRAIGHT RIVER
CITY OF FARIBAULT, RICE COUNTY

INSPECTION AND SOUNDING PLAN

Drawn By: JTF	COLLINS ENGINEERS INC 123 North Wacker Drive Suite 900 Chicago, Il. 60606 (312) 704-9300 www.collinsengr.com	Date: Sept. 2012
Checked By: DGS		Scale: NTS
Code: 742366508		Figure No.: 1

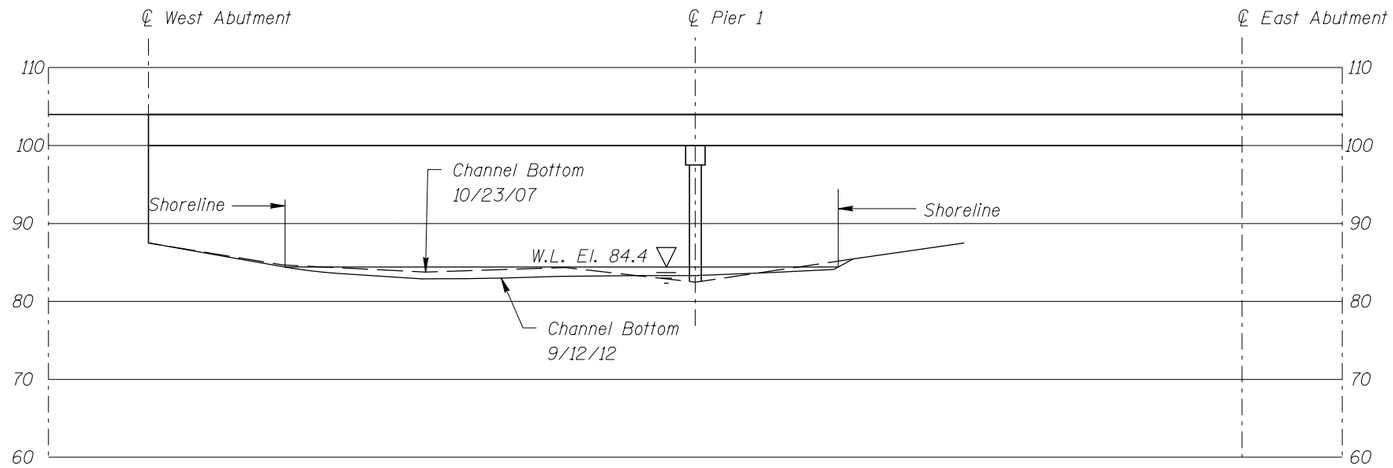

UPSTREAM FASCIA PROFILE

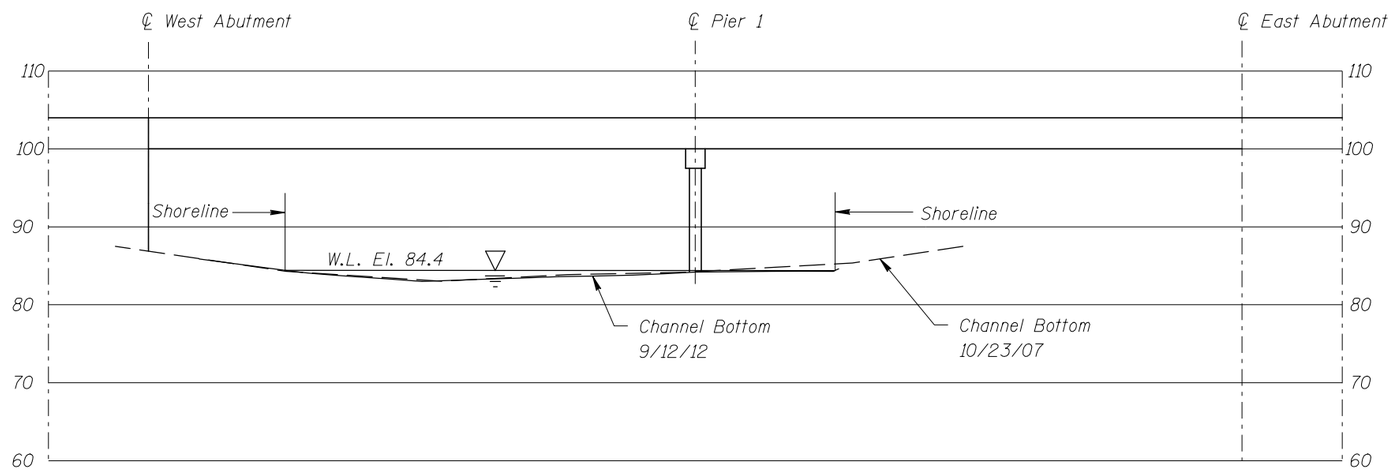

DOWNSTREAM FASCIA PROFILE

Note:

Refer to Figure 1 for General Notes.

MINNESOTA
DEPARTMENT OF TRANSPORTATION
UNDERWATER BRIDGE INSPECTION

STRUCTURE NO. 66508
OVER THE STRAIGHT RIVER
CITY OF FARIBAULT, RICE COUNTY

UPSTREAM AND DOWNSTREAM
FASCIA PROFILES

Drawn By: JTF	COLLINS ENGINEERS INC 123 North Wacker Drive Suite 900 Chicago, IL 60606 (312) 704-9300 www.collinsengr.com	Date: Sept. 2012
Checked By: DGS		Scale: 1"=20'
Code: 742366508		Figure No.: 2

MINNESOTA DEPARTMENT OF TRANSPORTATION

OFFICE OF BRIDGES AND STRUCTURES

DAILY DIVING REPORT

INSPECTORS: Collins Engineers, Inc. DATE: September 12, 2012

ON-SITE TEAM LEADER: Roy A. Forsyth, P.E.

BRIDGE NO: 66508 WEATHER: Cloudy, 65° F

WATERWAY CROSSED: Straight River

DIVING OPERATION: _____ SCUBA _____ SURFACE SUPPLIED AIR

X OTHER Inspection by Wading

PERSONNEL: Brandon Corr, Charles Euwema

EQUIPMENT: Dry Suit, Scraper, Sounding Pole, Lead Line, Probe Rod, Camera

TIME IN WATER: 12:20 p.m.

TIME OUT OF WATER: 12:50 p.m.

WATERWAY DATA: VELOCITY 2.0 ft/s

VISIBILITY 1.0 foot

DEPTH 2.0 feet maximum at Pier 1

ELEMENTS INSPECTED: Pier 1

REMARKS: Overall, the concrete of the pier was smooth and sound. A moderate accumulation of timber debris consisting of logs and branches 1 foot in diameter and smaller was observed at the upstream nose and along the sides to the midpoint on the west face and to 10 feet downstream on the east face, extending from the channel bottom to 1 foot below the waterline. A scour depression 5 feet in radius by 1 foot deep was observed at the upstream end of Pier 1. The channel bottom material consisted of rocks and gravel with 2 inches of probe rod penetration at Pier 1.

FURTHER ACTION NEEDED: _____ YES X NO

Reinspect the submerged substructure units at the normal maximum recommended (NBIS) interval of sixty (60) months.

MINNESOTA DEPARTMENT OF TRANSPORTATION
OFFICE OF BRIDGES AND STRUCTURES

UNDERWATER INSPECTION CONDITION RATING FORM

BRIDGE NO. 66508
INSPECTORS Collins Engineers, Inc.
ON-SITE TEAM LEADER Roy A. Forsyth, P.E.
WATERWAY CROSSED Straight River

INSPECTION DATE September 12, 2012

NOTE: USE ALL APPLICABLE CONDITION DEFINITIONS AS DEFINED IN THE MINNESOTA RECORDING AND CODING GUIDE INCLUDING GENERAL, SUBSTRUCTURE, CHANNEL AND PROTECTION, AND CULVERTS AND WALL DEFINITIONS TO COMPLETE THIS FORM.

CONDITION RATING

			SUBSTRUCTURE						CHANNEL					GENERAL					
UNIT REFERENCE NO.	UNIT DESCRIPTION	MAXIMUM DEPTH OF WATER	PILING	COLUMNS, SHAFTS, OR FACES*	FOOTINGS	DISPLACEMENT	OTHER (BRACING)	OVERALL SUBSTRUCTURE CONDITION CODE*	SCOUR	EMBANKMENT EROSION	EMBANKMENT PROTECTION	OTHER (DRIFT/DEBRIS)	OVERALL CHANNEL & PROTECTION CONDITION	CONCRETE	STEEL	TIMBER	LOSS OF SECTION	PREVIOUS REPAIR OR MAINTENANCE	OTHER
		1	2	3	4	5	6	7	8	9	10	11	12	13	14	15	16	17	18
	Pier 1	2.0’	N	7	N	9	N	7	7	7	7	7	7	7	N	N	N	N	N

*UNDERWATER PORTION ONLY

REMARKS: Overall, the concrete of the pier was smooth and sound. A moderate accumulation of timber debris consisting of logs and branches 1 foot in diameter and smaller was observed at the upstream nose and along the sides to the midpoint on the west face and to 10 feet downstream on the east face, extending from the channel bottom to 1 foot below the waterline. A scour depression 5 feet in radius by 1 foot deep was observed at the upstream end of Pier 1. The channel bottom material consisted of rocks and gravel with 2 inches of probe rod penetration at Pier 1.

NOTES: ATTACH SKETCHES AS NEEDED, IDENTIFY REMARK BY REFERRING TO UNIT REFERENCE NO. AND REMARK NO.
USE GENERAL SECTION TO IDENTIFY OVERALL PRESENCE OF SPALLS, CRACKS, CORROSION, ETC.