UNDERWATER BRIDGE INSPECTION REPORT

STRUCTURE NO. 89188

7th STREET

OVER THE

ZUMBRO RIVER

CITY OF ROCHESTER

OCTOBER 2, 2012

PREPARED FOR THE

MINNESOTA DEPARTMENT OF TRANSPORTATION

BY

COLLINS ENGINEERS, INC.

JOB NO. 7423

MINNESOTA DEPARTMENT OF TRANSPORTATION
UNDERWATER BRIDGE INSPECTION

REPORT SUMMARY:

The substructure units inspected below water at Bridge No. 89188, the West Abutment and Piers 1, 2, and 3, were found to be in good to satisfactory condition. Several hairline to 1/4-inch-wide cracks were noted along the pier shafts and the abutment wall, with a very slight, 1/8-inch differential noted along the northern quarter point of Pier 1. The channel bottom appeared to be stable, and the scour protection system in-place around the substructure units was in good condition.

INSPECTION FINDINGS:

(A) The concrete piers were typically in smooth and sound condition.

(B) Two vertical 1/8-inch-wide cracks were observed at the upstream and downstream 1/4 points along the pier shaft of Piers 2 and 3 and extended from the top of the pier to the top of the concrete scour protection. Both cracks extended through the full depth of the pier shaft.

(C) The channel bottom consisted of silty sand with 3 inches of probe rod penetration outside of the concrete scour protection around all substructure units.

(D) Four vertical hairline to 1/4-inch-wide cracks were observed along the Pier 1 shaft and extended from the top of the pier to top of the concrete scour protection. All cracks extended through the full depth of the pier shaft.

(E) A 1/8-inch differential (east / west) was observed at the top of the Pier 1 shaft at the upper 1/4 point along the northernmost 1/4-inch wide crack.

(F) A vertical 1/8-inch-wide crack was observed at the upstream 1/4 point along the West Abutment and extended from the top of the abutment to the concrete scour protection.

(G) A 4-inch-diameter spall was observed near the outfall at the upstream 1/4 point along the West Abutment with up to 2 inches of penetration and an associated hairline crack that extended to the wingwall.

(H) A 1/16-inch wide vertical crack was observed at the middle joint of the West Abutment.

(I) A hairline crack was observed at the downstream 1/4 point of the West Abutment and extended from the top of abutment to top of concrete scour protection.

RECOMMENDATIONS:

(A) Monitor the cracking along the pier shafts at Piers 1, 2 and 3 and the West Abutment, with special attention to the minor 1/8-inch-wide differential along the northern end of Pier 1 for any further progression and/or movement.

(B) Reinspect the submerged substructure units at the normal maximum recommended (NBIS) interval of sixty (60) months.

Inspection Team Leader

Roy Forsyth

Roy A. Forsyth, PE
Date 6/30/2014 License# 49270

Respectfully submitted,

PROFESSIONAL ENGINEER
I hereby certify that this plan, specification, or report was prepared by me or under my direct supervision and that I am a duly Licensed Professional Engineer under the laws of the State of Minnesota.

Daniel G. Stromberg

Date 6/30/14 License # 21491

COLLINS ENGINEERS, INC.

Daniel G. Stromberg
Registered Professional
Engineer, State of Minnesota

MINNESOTA DEPARTMENT OF TRANSPORTATION
UNDERWATER BRIDGE INSPECTION

1. BRIDGE DATA

Bridge Number: 89188

Feature Crossed: Zumbro River

Feature Carried: 7th Street

Location: City of Rochester

Bridge Description: The superstructure consists of four spans of multiple reinforced concrete beams supporting a reinforced concrete deck. The bridge is supported by two reinforced concrete abutments and three reinforced concrete piers, which are founded on timber piles. The piers are numbered 1 through 3 from the west to east.

2. INSPECTION DATA

Professional Engineer Diver: Roy A. Forsyth, P.E.

Dive Team: Charles R. Euwema, Jordan T. Furlan, P.E.

Date: October 2, 2012

Weather Conditions: Sunny, 65° F

Underwater Visibility: 1.0 foot

Waterway Velocity: Negligible

3. SUBSTRUCTURE INSPECTION DATA

Substructure Inspected: West Abutment and Piers 1, 2, and 3.

General Shape: Oblong rectangular shafts with pointed upstream and downstream ends supported by rectangular footings that are founded on timber piles. A sloped concrete scour-protection apron surrounds each of the piers and also extends along the West Abutment.

Maximum Water Depth at Substructure Inspected: Approximately 6.7 feet.

4. WATERLINE DATUM

Water Level Reference: The top of the pier cap at the north end of Pier 1.

Water Surface: The waterline was approximately 9.0 feet below reference.
Waterline Elevation = 974.2.

5. NBIS CODING INFORMATION (Minnesota specific codes are used for 92B and 113)

Item 60: Substructure: Code __6___

Item 61: Channel and Channel Protection: Code __7____

Item 92B: Underwater Inspection: Code _B/10/12

Item 113: Scour Critical Bridges: Code__P____

Bridge is scour critical because abutment or pier foundation is rated as unstable due to observed scour at bridge site.
_____ Yes __X__ No

6. STRUCTURAL ELEMENT CONDITION RATING

Item #	Element Description	Quantity	Unit	Conditions				
				1	2	3	4	5
215	Concrete Abutment	65	LF	35	30			
210	Concrete Pier Wall	150	LF	75	75			

Photograph 1. Overall View of the Structure, Looking Northwest.

Photograph 2. View of Pier 1, Looking Northeast.

Photograph 3. View of Pier 2, Looking Northwest.

Photograph 4. View of Pier 3, Looking Northwest.

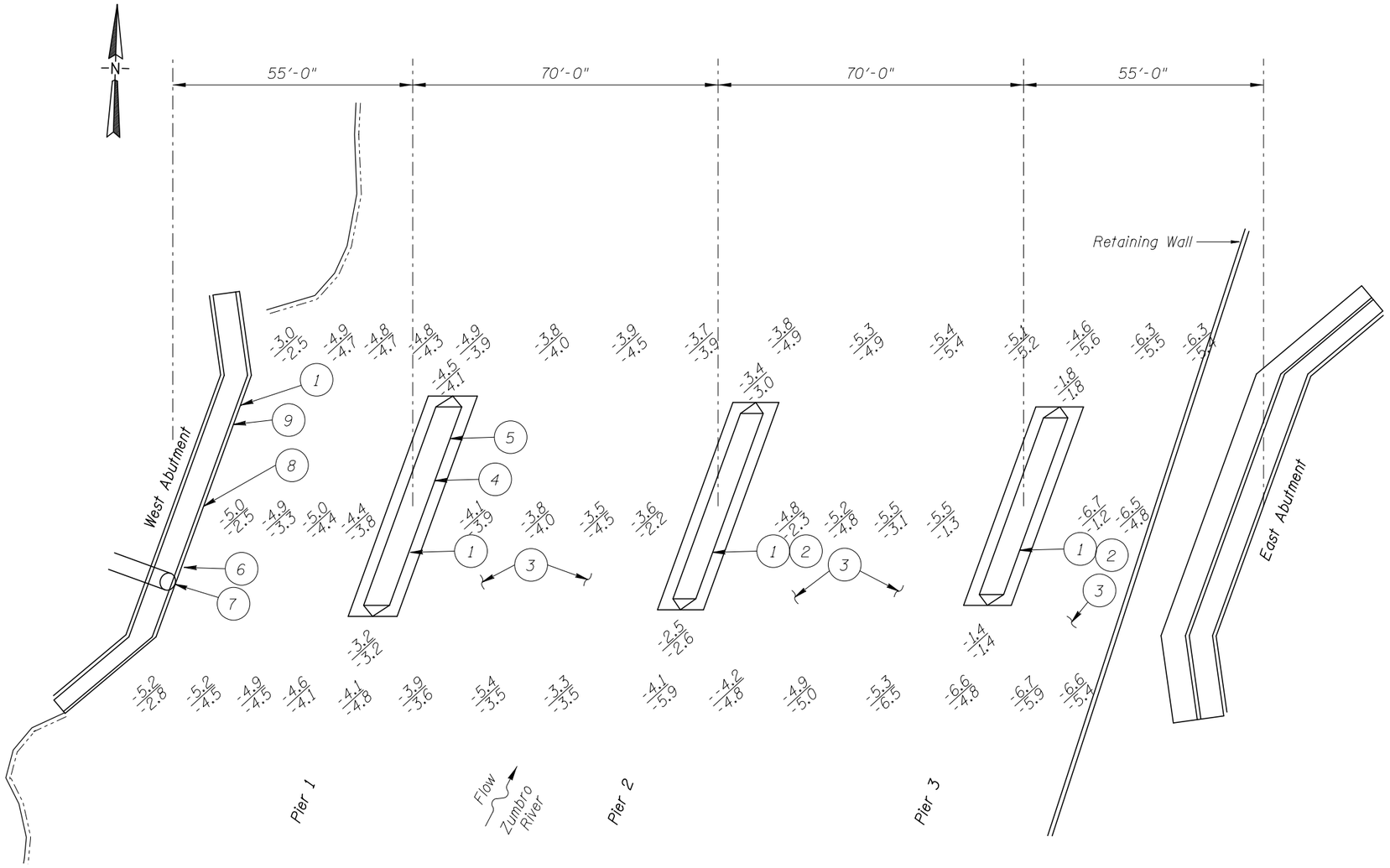

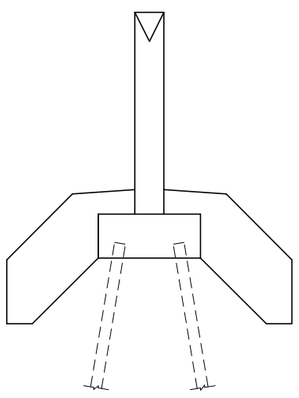

TYPICAL END VIEW OF EACH PIER SECTION

INSPECTION NOTES:

1. The concrete piers were typically in smooth and sound condition.
2. Two vertical 1/8-inch-wide cracks were observed at the upstream and downstream 1/4 points along the pier shaft and extended from the top of the pier to the top of the concrete scour protection. Both cracks extended through the full depth of the pier shaft.
3. The channel bottom consisted of silty sand with 3 inches of penetration outside of the concrete scour protection around the substructure units.
4. Four vertical hairline to 1/4-inch-wide cracks were observed along the Pier 1 shaft and extended from the top of the pier to top of the concrete scour protection. All cracks extended through the full depth of the pier shaft.
5. A 1/8-inch differential (east / west) was observed at the top of the Pier 1 shaft along the nothernmost 1/4-inch wide crack.
6. A vertical 1/8-inch-wide crack was observed at the upstream 1/4 point along West Abutment and extended from the top of the abutment to the concrete scour protection.
7. A 4-inch-diameter spall was observed near the outfall at the upstream 1/4 point along the West Abutment with up to 2 inches of penetration and an associated hairline crack that extended to the wingwall.
8. A 1/16-inch wide vertical crack was observed at the middle joint of the West Abutment.
9. A hairline crack was observed at the downstream 1/4 point of the West Abutment and extended from the top of abutment to top of concrete scour protection.

GENERAL NOTES:

1. Piers 1 through 3 and the West Abutment were inspected underwater.
2. At the time of inspection, on October 2, 2012, the waterline was located approximately 9.0 feet below the top of Pier 1 on the north end. This corresponds to a waterline elevation of 974.2.
3. Soundings indicate the water depth at the time of inspection and are measured in feet.
4. Soundings were taken parallel to the bridge at 1/4 point intervals between the substructure units as well as around the pier structures.

Legend

-0.4	Sounding Depth (10/02/12)
-0.4	Sounding Depth (10/24/07)

Note:

All soundings based on 2012 waterline location.

MINNESOTA
DEPARTMENT OF TRANSPORTATION
UNDERWATER BRIDGE INSPECTION

STRUCTURE NO. 89188
7th STREET OVER THE ZUMBRO RIVER
CITY OF ROCHESTER

INSPECTION AND SOUNDING PLAN

Drawn By: CRE	COLLINS ENGINEERS INC. 123 North Wacker Drive Suite 900 Chicago, IL 60606 (312) 704-9300 www.collinsengr.com	Date: OCT. 2012
Checked By: RAF		Scale: NTS
Code: 52219188		Figure No.: 1

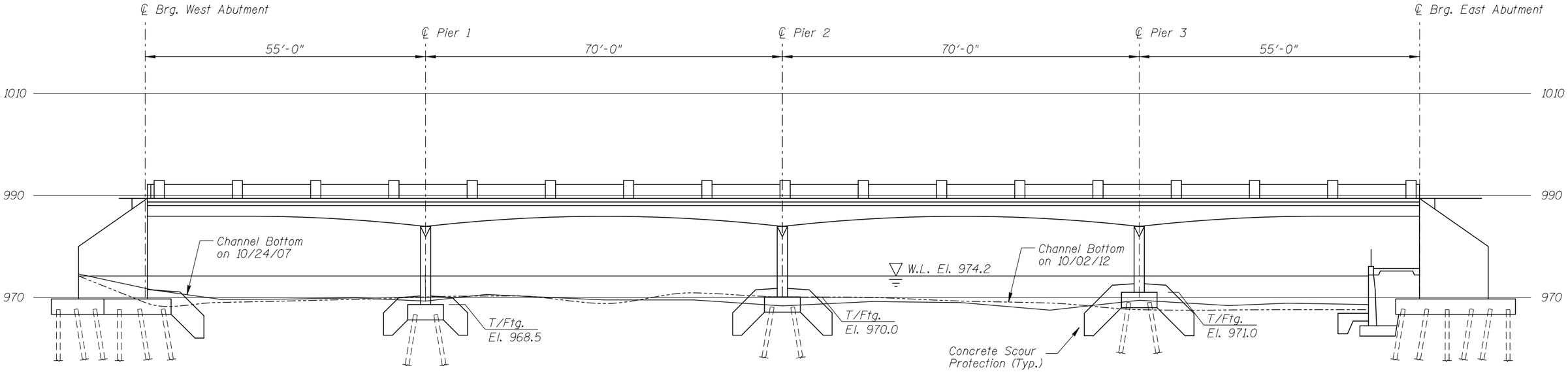

UPSTREAM FASCIA PROFILE

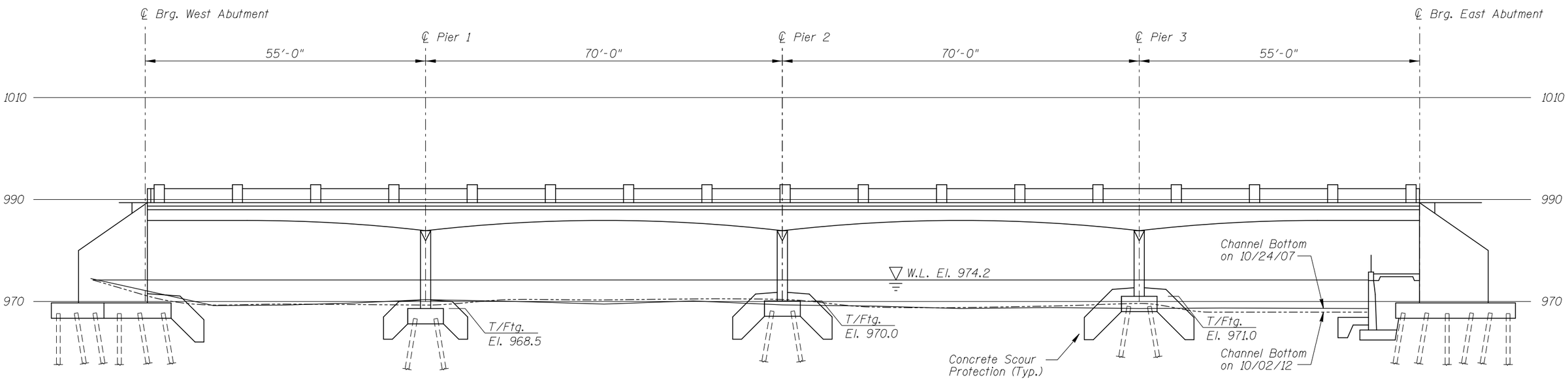

DOWNSTREAM FASCIA PROFILE

Note:

Refer to Figure 1 for General Notes.

MINNESOTA
DEPARTMENT OF TRANSPORTATION
UNDERWATER BRIDGE INSPECTION

STRUCTURE NO. 89188
7th STREET OVER THE ZUMBRO RIVER
CITY OF ROCHESTER

UPSTREAM AND DOWNSTREAM FASCIA PROFILES

Drawn By: CRE	COLLINS ENGINEERS INC. 123 North Wacker Drive Suite 900 Chicago, IL 60606 (312) 704-9300 www.collinsengr.com	Date: OCT. 2012
Checked By: RAF		Scale: 1"=20'
Code: 52219188		Figure No.: 2

MINNESOTA DEPARTMENT OF TRANSPORTATION
OFFICE OF BRIDGES AND STRUCTURES

DAILY DIVING REPORT

INSPECTORS: Collins Engineers, Inc. DATE: October 2, 2012

ON-SITE TEAM LEADER: Roy A. Forsyth, P.E.

BRIDGE NO: 89188 WEATHER: Sunny, 65° F

WATERWAY CROSSED: Zumbro River

DIVING OPERATION: X SCUBA _____ SURFACE SUPPLIED AIR

_____ OTHER_____

PERSONNEL: Charles R. Euwema, Jordan T. Furlan, P.E.

EQUIPMENT: U/W Light, Scraper, Lead Line, Sounding Pole, Probe Rod, Camera

TIME IN WATER: 10:00 A.M.

TIME OUT OF WATER: 10:30 A.M.

WATERWAY DATA: VELOCITY Negligible

VISIBILITY 1.0 foot

DEPTH 6.7 feet maximum at Pier 3.

ELEMENTS INSPECTED: West Abutment and Piers 1, 2, and 3

REMARKS: Overall, the West Abutment and Piers 1, 2, and 3, were found to be in good to satisfactory condition. Several hairline to 1/4-inch-wide cracks were noted along the pier shafts and the abutment wall, with a very slight, 1/8-inch differential noted along the northern quarter point of Pier 1. The channel bottom appeared to be stable, and the scour protection system in-place around the substructure units was in good condition.

FURTHER ACTION NEEDED: _____ YES X NO

Monitor the cracking along the pier shafts at Piers 1, 2 and 3 and the West Abutment, with special attention to the minor 1/8-inch-wide differential along the northern end of Pier 1 for any further progression and/or movement.

Reinspect the submerged substructure units at the normal maximum recommended (NBIS) interval of sixty (60) months.

MINNESOTA DEPARTMENT OF TRANSPORTATION
OFFICE OF BRIDGES AND STRUCTURES

UNDERWATER INSPECTION CONDITION RATING FORM

BRIDGE NO. 89188
INSPECTORS Collins Engineers, Inc.
ON-SITE TEAM LEADER Roy A. Forsyth, P.E.
WATERWAY CROSSED Zumbro River

INSPECTION DATE October 2, 2012

NOTE: USE ALL APPLICABLE CONDITION DEFINITIONS AS DEFINED IN THE MINNESOTA RECORDING AND CODING GUIDE INCLUDING GENERAL, SUBSTRUCTURE, CHANNEL AND PROTECTION, AND CULVERTS AND WALL DEFINITIONS TO COMPLETE THIS FORM.

CONDITION RATING

			SUBSTRUCTURE						CHANNEL					GENERAL					
UNIT REFERENCE NO.		MAXIMUM DEPTH OF WATER	PILING	COLUMNS, SHAFTS, OR FACES*	FOOTINGS	DISPLACEMENT	OTHER	OVERALL SUBSTRUCTURE CONDITION CODE*	SCOUR	EMBANKMENT EROSION	EMBANKMENT PROTECTION	OTHER (DRIFT/DEBRIS)	OVERALL CHANNEL & PROTECTION CONDITION	CONCRETE	STEEL	TIMBER	LOSS OF SECTION	PREVIOUS REPAIR OR MAINTENANCE	OTHER
	UNIT DESCRIPTION	1	2	3	4	5	6	7	8	9	10	11	12	13	14	15	16	17	18
	West Abutment	5.2’	N	7	N	9	N	7	8	N	N	N	8	7	N	N	N	N	N
	Pier 1	4.9’	N	6	N	8	N	6	8	N	N	N	8	7	N	N	N	N	N
	Pier 2	4.8’	N	7	N	9	N	7	8	N	N	N	8	7	N	N	N	N	N
	Pier 3	6.7’	N	7	N	9	N	7	8	N	N	N	8	7	N	N	N	N	N

*UNDERWATER PORTION ONLY

REMARKS: Overall, the West Abutment and Piers 1, 2, and 3, were found to be in good to satisfactory condition. Several hairline to 1/4-inch-wide cracks were noted along the pier shafts and the abutment wall, with a very slight, 1/8-inch differential noted along the northern quarter point of Pier 1. The channel bottom appeared to be stable, and the scour protection system in-place around the substructure units was in good condition.

NOTES: ATTACH SKETCHES AS NEEDED, IDENTIFY REMARK BY REFERRING TO UNIT REFERENCE NO. AND REMARK NO.
USE GENERAL SECTION TO IDENTIFY OVERALL PRESENCE OF SPALLS, CRACKS, CORROSION, ETC.