UNDERWATER BRIDGE INSPECTION REPORT

STRUCTURE NO. 02545

CR NO. 116

OVER THE

RUM RIVER

METRO DISTRICT - ANOKA COUNTY

SEPTEMBER 9, 2012

PREPARED FOR THE

MINNESOTA DEPARTMENT OF TRANSPORTATION

BY

COLLINS ENGINEERS, INC.

AND

WSB & ASSOCIATES, INC.

JOB NO. 2107

MINNESOTA DEPARTMENT OF TRANSPORTATION
UNDERWATER BRIDGE INSPECTION

REPORT SUMMARY:

The substructure units inspected at Bridge No. 02545, Piers 1 through 3, were found to be in good condition with no defects of structural significance observed. The channel bottom in most instances appeared stable. A small portion of the footing at Pier 1 was exposed. A light accumulation of debris extended some distance downstream from around the upstream nose of Pier 3.

INSPECTION FINDINGS:

(A) A light accumulation of 18 inch diameter and smaller timber debris was observed starting 5 feet downstream of the upstream nose on the east side and extended around the nose to 20 feet downstream along the west face of Pier 3.

(B) The top of footing was exposed 4.2 feet below the waterline for 15 feet along the east face of Pier 1 with up to 4 inches of vertical exposure.

(C) Overall the concrete was observed to be in good and sound condition. Also, the channel bottom was found to be stable and consisted of sandy gravel with up to 1 foot of probe rod penetration.

RECOMMENDATIONS:

(A) Monitor the footing exposure and drift accumulation during future underwater inspections.

(B) Reinspect the submerged substructure units at the normal maximum recommended (NBIS) interval of sixty (60) months.

Inspection Team Leader:

WSB and Associates

Barritt Lovelace
Registered Professional Engineer
Bridge Safety Inspection Team Leader

Respectfully submitted,

PROFESSIONAL ENGINEER
I hereby certify that this plan, specification, or report was prepared by me or under my direct supervision and that I am a duly Licensed Professional Engineer under the laws of the State of Minnesota.

Daniel G. Stromberg

Date 6/30/14 License # 21491

COLLINS ENGINEERS, INC.

Daniel G. Stromberg
Registered Professional
Engineer, State of Minnesota

MINNESOTA DEPARTMENT OF TRANSPORTATION
UNDERWATER BRIDGE INSPECTION

1. BRIDGE DATA

Bridge Number: 02545

Feature Crossed: The Rum River

Feature Carried: CR No. 116

Location: Metro District - Anoka County

Bridge Description: The superstructure consists of a four span concrete beam structure supported by two concrete abutments on piles and three concrete piers on piles, numbered 1 to 3 starting from the west.

2. INSPECTION DATA

Professional Engineer/Team Leader: Barritt Lovelace, P.E.

Dive Team: Brad Robinson (WSB), Lukas Janulis (Collins)

Date: September 9, 2012

Weather Conditions: Sunny, 65°F

Underwater Visibility: 1 foot

Waterway Velocity: None/Negligible

3. SUBSTRUCTURE INSPECTION DATA

Substructure Inspected: Piers 1 through 3.

General Shape: The pier shafts are rectangular with flat noses. The piers are supported by rectangular footings founded on piles.

Maximum Water Depth at Substructure Inspected: Approximately 5.4 feet.

4. WATERLINE DATUM

Water Level Reference: The top of the pier cap on the upstream end of Pier 1.

Water Surface: The waterline was approximately 12.7 feet below reference.
Waterline Elevation = 844.7

5. NBIS CODING INFORMATION (Minnesota specific codes are used for 92B and 113)

Item 60: Substructure: Code __7___

Item 61: Channel and Channel Protection: Code __7___

Item 92B: Underwater Inspection: Code B/09/12

Item 113: Scour Critical Bridges: Code I/92

Bridge is scour critical because abutment or pier foundation is rated as unstable due to observed scour at bridge site.
_____ Yes ___X__ No

6. STRUCTURAL ELEMENT CONDITION RATING:

Item #	Element Description	Quantity	Unit	Conditions				
				1	2	3	4	5
210	Concrete Pier Wall	259	LF	259				
985	Slopes	1	EA		1			

Photograph 1. Overall View of the Structure, Looking East.

Photograph 2. View of Pier 1, Looking East.

Photograph 3. View of Pier 2, Looking East.

Photograph 4. View of Pier 3, Looking West.

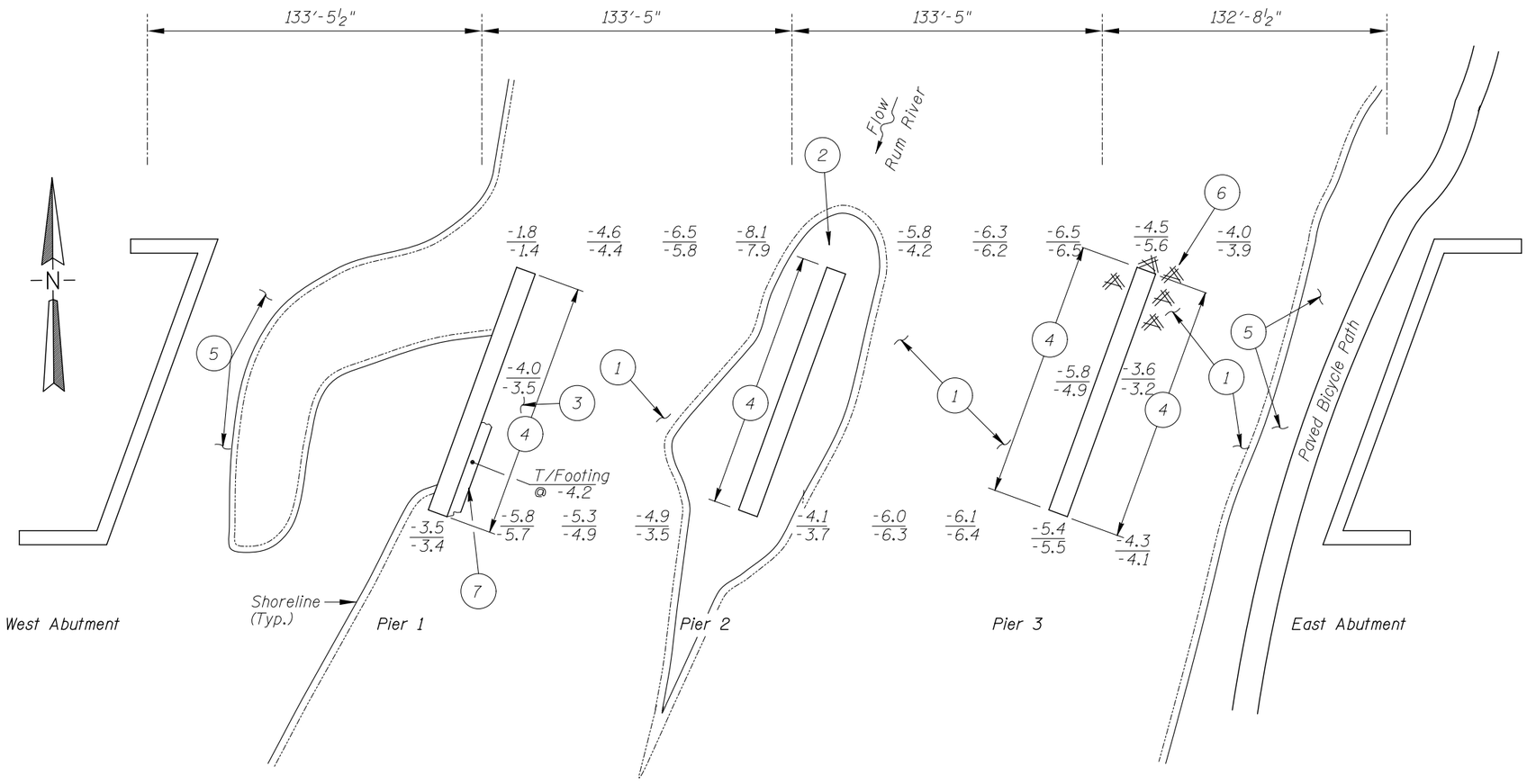

SOUNDING PLAN

GENERAL NOTES:

1. Piers 1, 2, and 3 were inspected underwater.
2. At the time of inspection on September 9, 2012, the waterline was located approximately 12.7 feet below the top of the pier cap at the upstream end of Pier 1. This corresponds to a waterline elevation of 844.7 based on the previous report dated August 13, 2007.
3. Soundings indicate the water depth at the time of inspection and are measured in feet.
4. Soundings were taken parallel to the bridge at 1/4 point intervals between the substructure units.

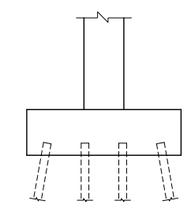

TYPICAL END VIEW OF PIERS

INSPECTION NOTES:

1. The channel bottom consisted of sandy gravel with up to 1 foot of probe rod penetration.
2. 1 to 2 foot diameter riprap was observed at the upstream end of Pier 2.
3. The channel bottom around Pier 1 consisted of silty sand with up to 2 feet of probe rod penetration.
4. The concrete was smooth and sound.
5. The embankments consisted of grouted riprap in the immediate vicinity of both abutments.
6. A light accumulation of 18 inch diameter and smaller timber debris was observed from 5 feet downstream of the upstream nose on the east face, around the upstream nose, to 20 feet downstream of the upstream nose along the west face. The debris extending from the channel bottom up 2 feet and up to 4 feet off the faces and nose.
7. The top of footing was exposed at 4.2 feet below the waterline from the downstream nose to 15 feet upstream of the downstream nose along the east face of the pier with up to 4 inches of vertical exposure.

Legend

-2.0	Sounding Depth (9/9/12)
-5.2	Sounding Depth (8/13/07)
	Timber Debris

Note:

All soundings based on 2012 waterline location.

MINNESOTA
DEPARTMENT OF TRANSPORTATION
UNDERWATER BRIDGE INSPECTION

STRUCTURE NO. 02545
OVER THE RUM RIVER
METRO DISTRICT, ANOKA COUNTY

INSPECTION AND SOUNDING PLAN

WSB & Associates, Inc.
701 Xenia Avenue South, Suite 300
Minneapolis, MN 55416
www.wsbeng.com
763-541-4800 - Fax 763-541-1700
INFRASTRUCTURE • ENGINEERING • PLANNING • CONSTRUCTION

Drawn By: BJR	COLLINS ENGINEERS INC. 123 North Wacker Drive Suite 300 Chicago, IL 60606 (312) 704-9300 www.collinsengr.com	Date: SEP. 2012
Checked By: BRL		Scale: NTS
Code: 52210106		Figure No.: 1

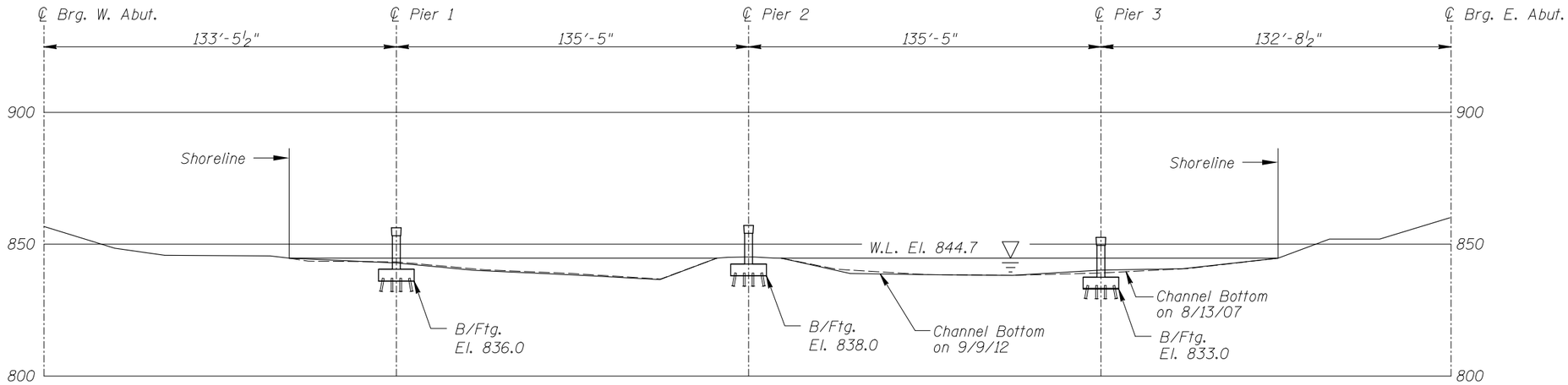

UPSTREAM FASCIA PROFILE

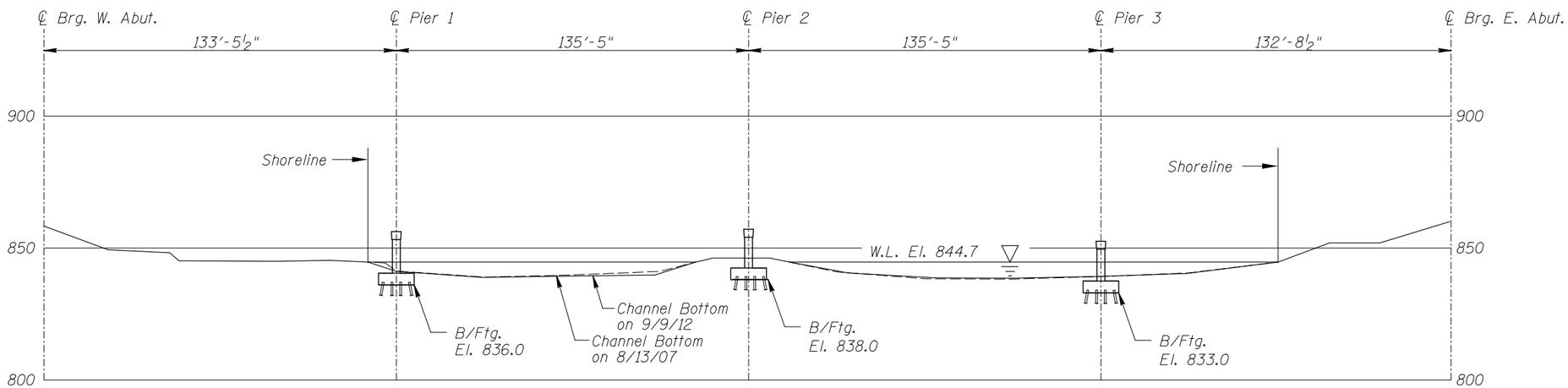

DOWNSTREAM FASCIA PROFILE

Note:

Refer to Figure 1 for General Notes.

WSB & Associates, Inc.
701 Xenia Avenue South, Suite 300
Minneapolis, MN 55416
www.wsbeng.com
763-541-4800 - Fax 763-541-1700
INFRASTRUCTURE • ENGINEERING • PLANNING • CONSTRUCTION

MINNESOTA
DEPARTMENT OF TRANSPORTATION
UNDERWATER BRIDGE INSPECTION

STRUCTURE NO. 02545
OVER THE RUM RIVER
METRO DISTRICT, ANOKA COUNTY

UPSTREAM AND DOWNSTREAM
FASCIA PROFILES

Drawn By: BJR	COLLINS ENGINEERS INC 123 North Wacker Drive Suite 300 Chicago, Il. 60606 (312) 704-9300 www.collinsengr.com	Date: SEP. 2012
Checked By: BRL		Scale: 1"=50'
Code: 52210106		Figure No.: 2

MINNESOTA DEPARTMENT OF TRANSPORTATION

OFFICE OF BRIDGES AND STRUCTURES

DAILY DIVING REPORT

INSPECTORS: WSB & Associates and Collins Engineers DATE: September 9, 2012

ON-SITE TEAM LEADER: Barritt Lovelace, P.E.

BRIDGE NO: 02545 WEATHER: Sunny, 65°F

WATERWAY CROSSED: The Rum River

DIVING OPERATION: X SCUBA _____ SURFACE SUPPLIED AIR

_____ OTHER_____

PERSONNEL: Brad Robinson (WSB), Lukas Janulis (Collins)

EQUIPMENT: Commercial Scuba, Sounding Pole, Camera, u/w Light, Scraper, Probe Rod

TIME IN WATER: 5:40 P.M.

TIME OUT OF WATER: 6:05 P.M

WATERWAY DATA: VELOCITY None/Negligible

VISIBILITY 1 foot

DEPTH 5.4 feet maximum at Pier 3.

ELEMENTS INSPECTED: Piers 1, 2 and 3

REMARKS: Overall, the concrete was in good, sound condition with no structurally significant defects observed. Several hairline vertical cracks were observed on Piers 1, 2 and 3. The top of footing was exposed at 4.2 feet below the waterline from the downstream nose to 15 feet upstream of the downstream nose along the east face of Pier 1 with up to 4 inches of vertical exposure. A light accumulation of timber debris extended from 5 feet downstream of the upstream nose on the east face, around the upstream nose, to 20 feet downstream of the upstream nose along the west face of Pier 3.

FURTHER ACTION NEEDED: _____ YES X NO

Monitor footing exposure and timber drift accumulations during future underwater inspections.

Reinspect the submerged substructure units at the normal maximum recommended (NBIS) interval of sixty (60) months.

MINNESOTA DEPARTMENT OF TRANSPORTATION
OFFICE OF BRIDGES AND STRUCTURES

UNDERWATER INSPECTION CONDITION RATING FORM

BRIDGE NO. 02545
INSPECTORS WSB & Associates and Collins Engineers, Inc.
ON-SITE TEAM LEADER Barritt Lovelace, P.E.
WATERWAY CROSSED Rum River

INSPECTION DATE September 9, 2012

NOTE: USE ALL APPLICABLE CONDITION DEFINITIONS AS DEFINED IN THE MINNESOTA RECORDING AND CODING GUIDE INCLUDING GENERAL, SUBSTRUCTURE, CHANNEL AND PROTECTION, AND CULVERTS AND WALL DEFINITIONS TO COMPLETE THIS FORM.

CONDITION RATING

			SUBSTRUCTURE						CHANNEL					GENERAL					
UNIT REFERENCE NO.		MAXIMUM DEPTH OF WATER	PILING	COLUMNS, SHAFTS, OR FACES*	FOOTINGS	DISPLACEMENT	OTHER	OVERALL SUBSTRUCTURE CONDITION CODE*	SCOUR	EMBANKMENT EROSION	EMBANKMENT PROTECTION	OTHER (DRIFT/DEBRIS)	OVERALL CHANNEL & PROTECTION CONDITION	CONCRETE	STEEL	TIMBER	LOSS OF SECTION	PREVIOUS REPAIR OR MAINTENANCE	OTHER
	UNIT DESCRIPTION	1	2	3	4	5	6	7	8	9	10	11	12	13	14	15	16	17	18
	Pier 1	4.2’	N	7	7	8	N	7	6	N	7	N	7	7	N	N	N	N	N
	Pier 2	N	N	7	N	8	N	7	8	N	N	7	7	7	N	N	N	N	N
	Pier 3	5.4’	N	7	N	8	N	7	7	N	7	7	7	7	N	N	N	N	N

*UNDERWATER PORTION ONLY

REMARKS: Overall, the concrete was in good, sound condition with no structurally significant defects observed. Several hairline vertical cracks were observed on Piers 1, 2 and 3. The top of footing was exposed at 4.2 feet below the waterline from the downstream nose to 15 feet upstream of the downstream nose along the east face of Pier 1 with up to 4 inches of vertical exposure. A light accumulation of timber debris extended from 5 feet downstream of the upstream nose on the east face, around the upstream nose, to 20 feet downstream of the upstream nose along the west face of Pier 3.

NOTES: ATTACH SKETCHES AS NEEDED, IDENTIFY REMARK BY REFERRING TO UNIT REFERENCE NO. AND REMARK NO.
USE GENERAL SECTION TO IDENTIFY OVERALL PRESENCE OF SPALLS, CRACKS, CORROSION, ETC.